BOOK NO. 2

SET NO. 5

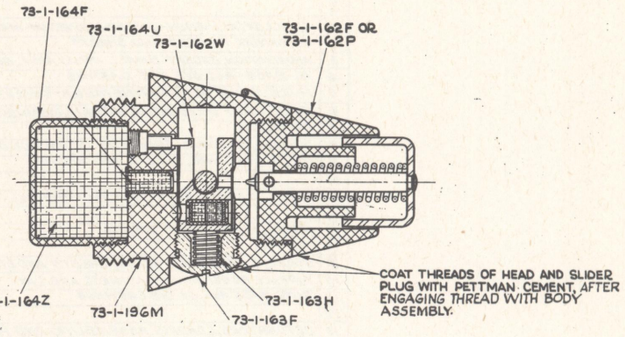
STUDY GUIDE

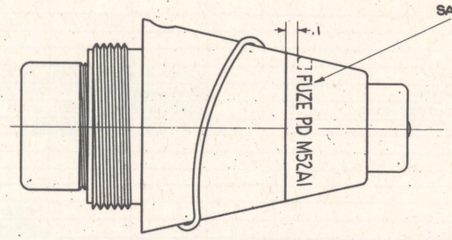
ORDNANCE

AMMUNITION DRAWINGS

73-1-161 TO 73-10-31

TO BE USED BY AMMUNITION INSPECTORS SCHOOL, SAVANNA ORDNANCE DEPOT



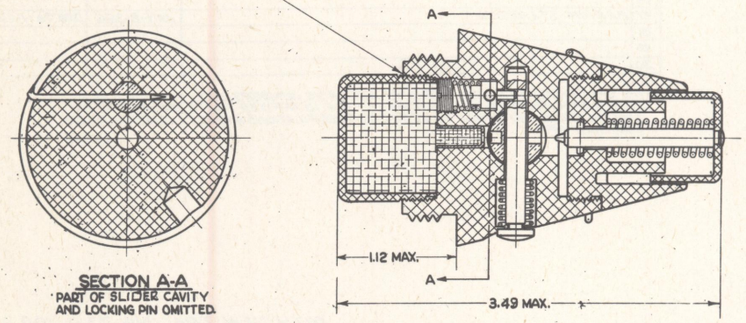


MARKING DIAGRAM

STAMP AS INDICATED IN SAMPLE STAMPING WITH 1/8 INCH HIGH LETTERS AND FIGURES .01 DEEP.
A - LOADERS LOT NUMBER.
B - DATE (MONTH AND YEAR) LOADED.
C - DESIGNATION OF FUZE.

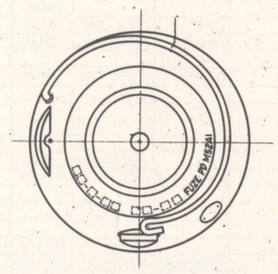
LINE NO.	LIST OF DRAWINGS	DRAWING NUMBER
1	ASSEMBLY	73-1-161
2	LIST OF PARTS AND LIST OF SPECS.	73-1-161A
3	DETAILS	73-1-162
4	DETAILS	73-1-163
5	DETAILS	73-1-164
6	DETAILS	73-1-196
7	DETONATOR ASSEMBLY, M18	73-2-185
8		
9	PACKING BOX	76-1-1246
10		
11	FIBER CONTAINER	76-1-1152
12		
13	STANDARD FOR DIMENSIONING & TOLER	30-1-7

COAT THREADS OF CUP WITH PETTMAN CEMENT. AFTER ENGAGING TWO THREADS WITH BODY ASSEMBLY. ALTERNATIVE:-SECURE BY STAKING.



SECTION A-A
PART OF SLIDER CAVITY AND LOCKING PIN OMITTED.

ASSEMBLY 73-1-161A10



WITH NEW TRACING 73-1-199
SUPERSEDES OLD TRACING 73-1-161
UNDER REVISION DATE OF JAN. 20, 1945

FUZE, POINT DETONATING, M52A1
ASSEMBLY AND DETAILS

JULY 18, 1939
REVISIONS

7	3-25-43
8	1-20-45
9	8-13-45
10	3-24-50

DRG. PERTAINS TO

CLASS	DIVISION	DRAWING	FILE
73	1	161	

TOLERANCE ON DIMENSIONS NOT OTHERWISE SPECIFIED
DECIMAL ±
FRACTIONAL ±
ANGULAR ±

D'FTSMAN GS-H. TRACER RMB ENGINEER
CHECKER ZAH C.C. PRINC. ENGINEER JCMG

SUBMITTED: J. Hemphill
LT. COL., ORD. DEPT. U.S.A.

EXAMINED: P.L. Christian
LT. COL., ORD. DEPT. U.S.A.

APPROVED BY ORDER OF THE CHIEF OF ORDNANCE: A. Adelman
ORD. DEPT. U.S.A.

D

ORDNANCE DEPT. U.S.A.

0 1 2 3 4 5 INCHES

LIST OF PARTS

LINE NO.	NAME OF PART	NUMBER REQ'D PER COMPONENT	PIECEMARK	MATERIAL: SIZE OR FORM	MATERIAL: KIND	MATERIAL: GRADE	MATERIAL: SPECIFICATION NUMBER	APPROXIMATE UNIT WEIGHT (GRAINS)	APPROX. GROSS WT. OF RAW STOCK PER 1000 ASSEMBLIES	REMARKS
1	ASSEMBLY		73-1-161A				50-17-17	.561a		
2										
3										
4	SPRING, SLIDER	1	73-1-163H	WIRE	STEEL	COMP-A	QQ-W-470	4.9		(Pa)
5	PLUG, SLIDER	1	73-1-163F	ROD	BRASS	B-HALF-HARD	QQ-B-611	114.73		(a)
6	CUP, BOOSTER	1	73-1-164F	CASTING	AL-BASE ALLOY	CLASS 10R 2	QQ-A-591	121.0		(e)
7	PELLET, BOOSTER	1	73-1-164Z		TETRYL	I, CLASS-A	JAN-T-339	256.0		
8										
9										
10										
11										
12	HEAD ASSEMBLY		73-1-162F					1416.21		
13	HEAD ASSEMBLY (ALT.)		73-1-162P					1645.00		
14	HEAD	1	73-1-162E	CASTING	ZINC BASE ALLOY	COMP-A OR B	QQ-Z-363	1125.00		
15	HEAD (ALT.)	1	73-1-162G	ROD	BRASS	HALF-HARD	QQ-B-611	1354.00		
16	PIN, FIRING PIN LOCK	1	73-1-162N	BAR	STEEL, AS-COLD-FINISHED	FS1010 OR FS1020	QQ-S-633	1.60		(d) (pa)(pb) OR(pe)
17										
18	FIRING PIN ASSEMBLY		73-1-162H					250.00		(pa)(pb) OR(pe)
19	STRIKER	1	73-1-162U	STRIP	STEEL	WD1010 OR WD1020	57-136	180.00		
20	PIN, FIRING	1	73-1-162K	BAR	STEEL, AS-COLD-FINISHED	FS 1010 OR FS 1020	QQ-S-633	70.00		
21										
22										
23	FIRING PIN ASSEMBLY (ALT.)		73-1-162Z					106.6		
24	STRIKER, ALTERNATIVE	1	73-1-162R	SHEET	ALUMINUM	COND-A	QQ-A-561	81.0		
25	PIN, FIRING, ALTERNATIVE	1	73-1-162D	ROD	AL-ALLOY	CONDITION-T	QQ-A-351	24.0		(g)
26										
27	SPRING, FIRING PIN	1	73-1-162L	WIRE	STEEL	COMP-A	QQ-W-470	39.61		(Pa)
28										
29										
30										
31	BOOSTER LEAD CUP ASSEMBLY		73-1-164U					8.60		
32	CUP, BOOSTER LEAD	1	73-1-164X	STRIP	GILDING METAL		JAN-G-439	4.80		
33	CHARGE, BOOSTER LEAD CUP	1	73-1-164W		TETRYL	I, CLASS-A	JAN-T-339	3.86		
34										
35										
36										
37	BODY ASSEMBLY		73-1-196M					1751.14		
38	BODY	1	73-1-196N	ROD	AL-ALLOY	CONDITION-T	QQ-A-351	1389.86		
39	PIN, SLIDER GUIDE	1	73-1-162T	BAR	STEEL, AS-COLD-FINISHED	B1113 OR FS1117	QQ-S-633	20.00		(pa)(pb)(pe)
40	PIN, SET BACK	1	73-1-163B	BAR	STEEL, AS-COLD-FINISHED	FS 1137	QQ-S-633	15.54		(pa)(pb)(pe)
41	SPRING, SET BACK PIN	1	73-1-163D	WIRE	STEEL	COMP-A	QQ-W-470	1.20		(Pa)
42	PLUG, SET BACK	1	73-1-163M	ROD	BRASS	B-HALF-HARD	QQ-B-611	15.00		
43	PIN, SAFETY	1	73-1-163E	ROD	BRASS	B-HALF-HARD	QQ-B-611	102.00		(c)
44	SPRING, SAFETY PIN	1	73-1-163G	WIRE	STEEL	COMP-A	QQ-W-470	12.40		(Pa)
45	WIRE, SAFETY	1	73-1-164N	WIRE	STEEL	COMP-A	QQ-W-470	31.0		(Pa)(pb)(pc) OR(pe)
46										
47										
48										
49	SLIDER ASSEMBLY		73-1-162W					180.9		
50	SLIDER	1	73-1-162C	ROD	BRASS	B-HALF-HARD	QQ-B-611	171.1		
51	DETONATOR, ASSEM., M18	1	73-2-185A				50-78-7	9.84		
52										
53					GRAPHITE	I, II OR III	JAN-G-155			(f)
54					CEMENT, PETTMAN		JAN-C-99			
56										
57										
58										

(a) ALTERNATIVE :- ZINC BASE ALLOY DIE-CASTING, COMP-A, SPEC. QQ-Z-363(k)

(c) ALTERNATIVE :- (FOR UPSET OR COLD HEAD PROCESS ONLY):
STEEL, BAR, FS1010 OR FS1020, AS-COLD-FINISHED, SPEC. QQ-S-633(pa)(pe)(k)

(d) NOT REQUIRED WHEN ALTERNATIVE METHOD HEAD ASSEMBLY IS USED.

(e) ALTERNATIVE :- AL-BASE-ALLOY, DIE CASTING, CLASS 5, SPEC. AXS-679 (k)

(f) ALTERNATIVE :- BARIUM STEARATE, SPEC. JAN-B-366 MAY BE USED TO REPLACE ALL OR PART OF GRAPHITE. (k)

(p) PROTECTIVE FINISHES, SPEC. 57-0-2
(p a) TYPE I, CLASS TS
(p b) TYPE I, CLASS RS
(p c) TYPE II, CLASS B
(pe) TYPE I, CLASS RSC.

(g) ALTERNATIVE :- ALUMINUM ALLOY, ROD, HEAT-TREATED, COLD WORKED, AND AGED, SPEC AXS 1318. (k)

(k) ALTERNATIVE MATERIALS ARE INTENDED TO BE USED ONLY WHEN PRESCRIBED MATERIALS ARE NOT AVAILABLE.

LIST OF SPECIFICATIONS

LINE NO.	LIST OF SPECIFICATIONS	SPEC. NUMBER *	REQUIRED BY
1	AL-ALLOY (ALUMINUM-COPPER-MAGNESIUM-MANG) BARS, ETC.	QQ-A-351	DRG. 73-1-162
2	ALUMINUM PLATES AND SHEETS	QQ-A-561	DRG. 73-1-162
3	AMMUNITION, EXCEPT SMALL ARMS AMM., GENERAL SPEC. FOR	50-0-1	DRG. 73-1-161
4	AL-BASE-ALLOY-DIE CASTING	QQ-A-591	DRG. 73-1-162
5	FUZE, POINT DETONATING M52A1 & M52A1B1, LDG. & ASSY.	50-17-17	DRG. 73-1-161
6	FUZE, POINT DETONATING M52A1 & M52A1B1 METAL PARTS FOR	50-40-9	DRG. 73-1-161
7	GRAPHITE	JAN-G-155	DRG. 73-1-161
8	METALS, GENERAL SPEC. FOR INSPECTION OF	QQ-M-151	QQ-B-611
9	METAL, GILDING, SHEETS AND STRIPS	JAN-G-439	DRG. 73-1-164
10			
11	STEEL, CARBON; BARS (GENERAL PURPOSE)	QQ-S-633	DRG. 73-1-162
12			
13	STEEL, WIRE, MUSIC SPRING	QQ-W-470	DRG. 73-1-162
14	TETRYL	JAN-T-339	DRG. 73-1-161
15	STEEL, CARBON AND ALLOY, SHEETS AND STRIPS	57-136	DRG. 73-1-162
16	SURFACE ROUGHNESS WAVINESS AND LAY	MIL-STD-10	DRG 73-1-162
17	ZINC BASE ALLOY DIE CASTINGS	QQ-Z-363	DRG. 73-1-163
18			
19	DETONATORS, LOADING, ASSEMBLING AND PACKING	50-78-7	DRG. 73-2-185
20	FINISHES, PROTECTIVE, FOR IRON AND STEEL PARTS	57-0-2	DRG. 73-1-164
21	CEMENT, PETTMAN	JAN-C-99	DRG. 73-1-161
22	BRASS, COMMERCIAL; BARS, PLATES, RODS, SHAPES, SHEETS, ETC.	QQ-B-611	DRG. 73-1-161
23	AL-BASE ALLOY-DIE CASTING	AXS-679	DRG. 73-1-162
24			
25	ALUMINUM ALLOY, FREE MACHINING, BARS AND RODS.	AXS-1318	DRG. 73-1-161
26			
27	BARIUM STEARATE	JAN-B-366	DRG. 73-1-161
28			
29			
30			

* THE SPECIFICATION NUMBERS SHOWN ARE BASIC NUMBERS ONLY. WHEN A SPECIFICATION IS REVISED A LETTER IS AFFIXED TO ITS BASIC NUMBER SPECIFICATIONS REFERRED TO IN THESE SPECIFICATIONS AND NOT LISTED HEREON, SHALL NOT APPLY.

WITH NEW TRACING 73-1-199A
SUPERSEDES OLD TRACING 73-1-161A
UNDER REVISION DATE OF JAN. 20 1948

FUZE, POINT DETONATING M52A1
LIST OF PARTS & LIST OF SPECS.

JULY 18, 1939	CLASS	DIVISION	DRAWING	FILE
REVISIONS	73	1	161A	
9 3-25-43				
10 1-20-45				
11 8-15-45				
12 3-24-50				

TOLERANCE ON DIMENSIONS NOT OTHERWISE SPECIFIED
DECIMAL ±
FRACTIONAL ±
ANGULAR ±

D'FTSMAN K.L.M. | TRACER K.L.M. | ENGINEER

CHECKED D.H.H. | C.C. APPROVED | ENGINEER

DRG. PERTAINS TO 73-1-161

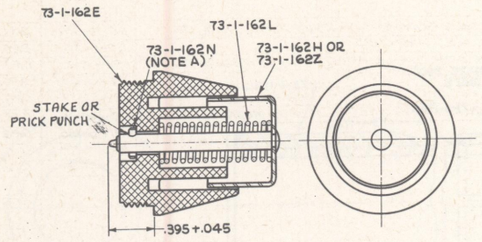
SUBMITTED: LT. COL. ORD. DEPT. U.S.A.

EXAMINED: LT. COL. ORD. DEPT. U.S.A.

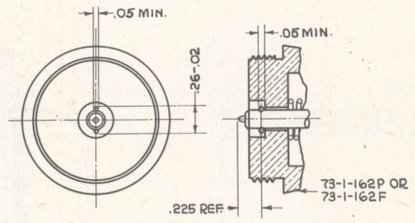
APPROVED BY ORDER OF THE CHIEF OF ORDNANCE: COL., ORD. DEPT. U.S.A.

D

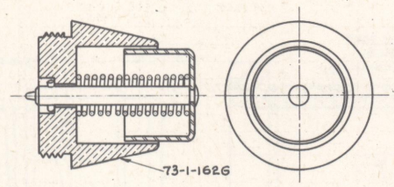
ORDNANCE DEPT. U.S.A.



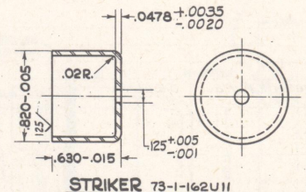
HEAD ASSEMBLY 73-1-162F10



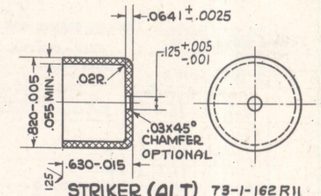
HEAD ASSEMBLY (ALTERNATIVE METHOD)



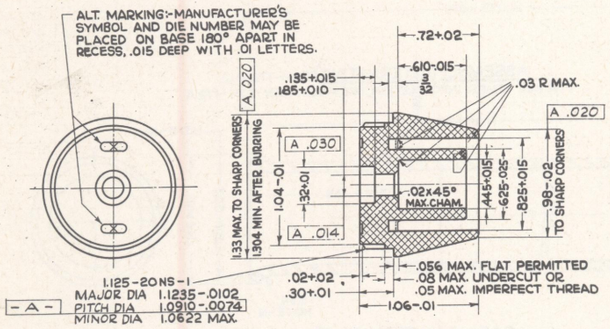
HEAD ASSEMBLY (ALT.) 73-1-162P10
FOR OTHER INFORMATION, SEE 73-1-162F



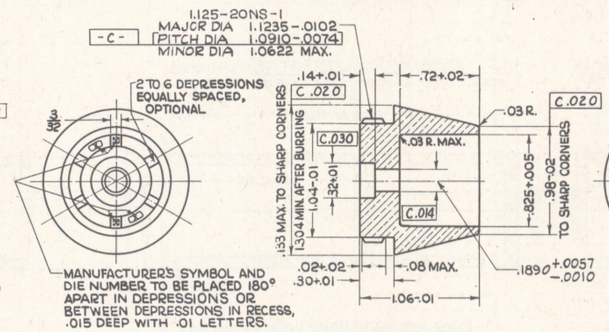
STRIKER 73-1-162U11
STEEL, STRIP, WD1010 OR WD1020, COLD-ROLLED, TEMPER NO. 4, (SOFT SKIN-ROLLED) BEST BRIGHT FINISH



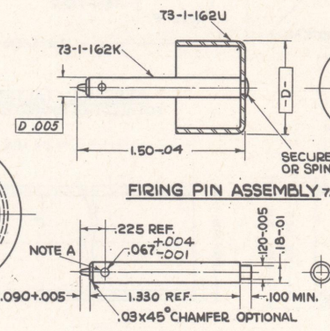
STRIKER (ALT) 73-1-162R11
ALUMINUM, SHEET, COND-A



HEAD 73-1-162E11
ZINC-BASE-ALLOY, DIE CASTING, COMP-A OR B, DICHROMATE FILM
MINIMUM WEIGHT, 1125 GRAINS



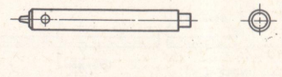
HEAD (ALT.) 73-1-162G11
COMMERCIAL BRASS, ROD, COMPOSITION "B", HALF-HARD
FINISH ALL OVER 125/



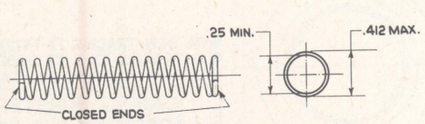
FIRING PIN ASSEMBLY 73-1-162H11

FIRING PIN ASSEMBLY (ALT) 73-1-162R11

PIN, FIRING 73-1-162K11
STEEL, BAR, FS1010 OR FS1020, AS-COLD-FINISHED
FINISH ALL OVER 125/



PIN, FIRING (ALT) 73-1-162D11
ALUMINUM ALLOY, ROD, COND-T
(FOR ALL OTHER INFORMATION SEE 73-1-162K)



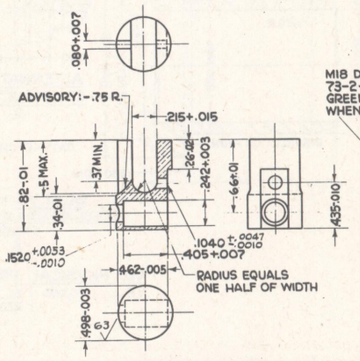
SPRING, FIRING PIN 73-1-162L11
STEEL, WIRE, MUSIC SPRING, COMP-A

REQUIREMENTS

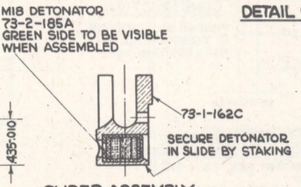
A- SOLID HEIGHT NOT OVER .663 INCHES
B- SEASON THOROUGHLY AFTER WINDING
C- WITHIN 24 HOURS AFTER PLATING, TREAT TO REMOVE EMBRITTLEMENT.
D- LOAD AT ONE INCH = 4 LBS., 11 OZ. MIN.
E- LOAD AT .75 INCH = 7 LBS., 1 OZ. MAX. OCCASIONAL CHECK WILL BE MADE AFTER COMPRESSION FOR AT LEAST 24 HOURS AT THIS HEIGHT.
F- LOADS APPLY AFTER SEASONING, PLATING AND TREATMENT TO REMOVE EMBRITTLEMENT.

ADVISORY DATA (NOT MANDATORY)

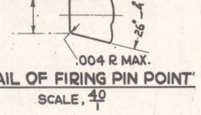
A- DIAMETER OF WIRE, .039 INCHES
B- TOTAL NUMBER OF COILS = 15 1/2
C NUMBER OF ACTIVE COILS = 13 1/2
D- ADJUST FREE HEIGHT TO MEET LOAD REQUIREMENTS. (SUGGESTED TRIAL 2 IN.)
E- SEASON BY HEATING TO 500°F FOR 30 MINUTES.
F- TO REMOVE EMBRITTLEMENT, HEAT TO 300°F FOR AT LEAST 30 MINUTES, AS SOON AFTER PLATING AS PRACTICABLE.



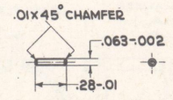
SLIDER 73-1-162C11
COMMERCIAL BRASS, ROD, COMPOSITION "B", HALF HARD
125/ ALL OVER EXCEPT AS NOTED.



SLIDER ASSEMBLY 73-1-162W7

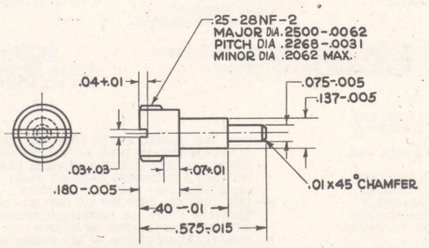


DETAIL OF FIRING PIN POINT
SCALE, 40/1



PIN, FIRING PIN LOCK 73-1-162N11
STEEL, BAR, FS1020 OR FS1010, AS-COLD-FINISHED
FINISH ALL OVER 125/
(NOTE A)

NOTE A- NOT REQUIRED WHEN ALTERNATIVE METHOD OF HEAD ASSEMBLY IS USED.



PIN, SLIDER GUIDE 73-1-162T11
STEEL, BAR, FS1117 OR B1113, AS-COLD-FINISHED
FINISH ALL OVER 125/

SCALE: 2/1, 4/1

FOR ALTERNATIVE MATERIALS AND PROTECTIVE FINISHES AND SURFACE ROUGHNESS SEE DWG 73-1-161A.

SUPERSEDES OLD TRACING 73-1-162 AND, IN PART, OLD TRACING 73-1-164 UNDER REVISION DATE OF JAN. 20, 1945

FUZES, POINT DETONATING, M52A1, M52A1B1 AND M82 DETAILS

JULY 11, 1939	CLASS	DIVISION	DRAWING	FILE
REVISIONS	73	1	162	

8	1-6-44	
9	1-20-45	
10	8-15-45	
11	3-24-50	

TOLERANCE ON DIMENSIONS NOT OTHERWISE SPECIFIED
DECIMAL ±
FRACTIONAL ±
ANGULAR ±

DRAFTSMAN J.R.T. | TRACER RMS | ENGINEER
CHECKED ZHH | O.C. | PRINCIPAL ENGINEER

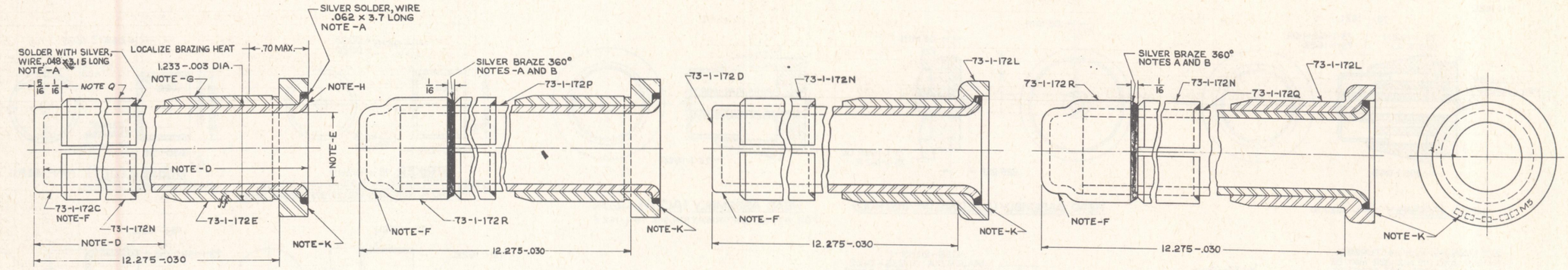
DRG. PERTAINS TO

76-1-159	
76-1-161	

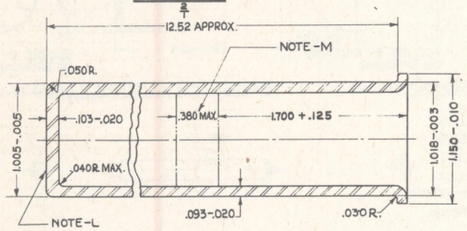
SUBMITTED: Amgallogh, LT. COL., ORD. DEPT. U.S.A.
EXAMINED: R.S. Christensen Jr., LT. COL., ORD. DEPT. U.S.A.
APPROVED BY ORDER OF THE CHIEF OF ORDNANCE: C.S. Reed 6 Oct 49, COL., ORD. DEPT., U.S.A.

D

ORDNANCE DEPT., U.S.A.

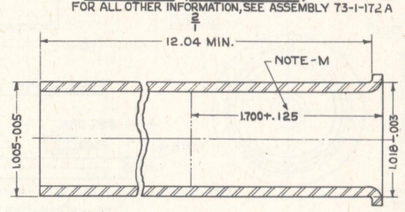


ASSEMBLY 73-1-172A13



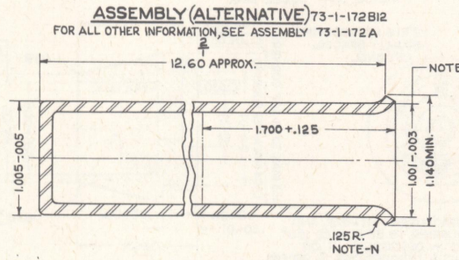
ASSEMBLY (ALTERNATIVE) 73-1-172H12

FOR ALL OTHER INFORMATION, SEE ASSEMBLY 73-1-172A



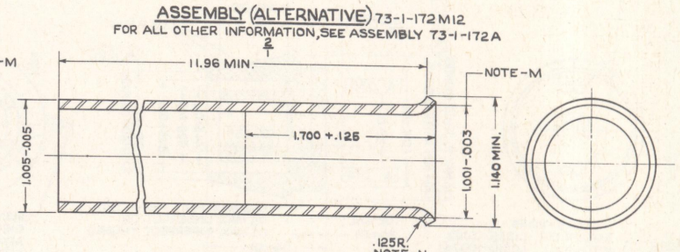
ASSEMBLY (ALTERNATIVE) 73-1-172B12

FOR ALL OTHER INFORMATION, SEE ASSEMBLY 73-1-172A



ASSEMBLY (ALTERNATIVE) 73-1-172M12

FOR ALL OTHER INFORMATION, SEE ASSEMBLY 73-1-172A

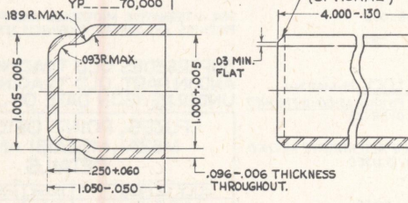


CASING 73-1-172C12

SEAMLESS STEEL TUBING, WD1025, WD1030 OR WD1035

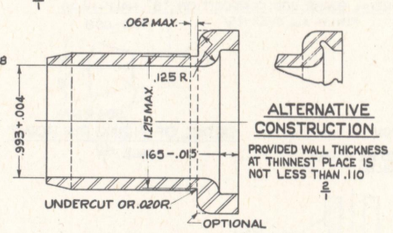
MIN. PHYSICAL PROPERTIES

TS ____ 85,000 | EL. ____ 10%
YP ____ 70,000



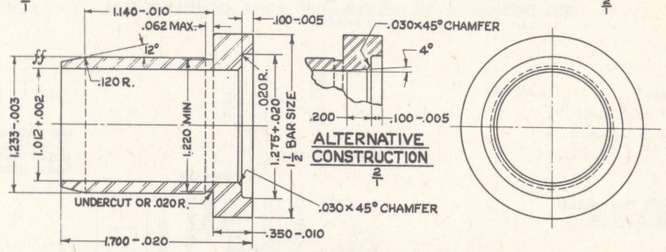
CASING (ALTERNATIVE) 73-1-172P12

FOR ALL OTHER INFORMATION, SEE CASING 72-1-172C



CASING (ALTERNATIVE) 73-1-172D12

FOR ALL OTHER INFORMATION, SEE CASING 73-1-172C



CASING (ALTERNATIVE) 73-1-172Q12

FOR ALL OTHER INFORMATION, SEE CASING 73-1-172C

THIS BURSTER CASING IS FOR USE IN THE FOLLOWING SHELL:-
SHELL, CHEMICAL, 105 MM., M60.

CUP, CLOSING 73-1-172R12

STEEL, COLD DRAWN, WD1010

TUBE, REINFORCING 73-1-172N13

STEEL, COLD ROLLED, WD1010

SLEEVE (ALTERNATIVE) 73-1-172L13

STEEL, WD1010 OR WD1015, HOT OR COLD ROLLED
FOR ALL OTHER INFORMATION SEE 73-1-172E
NOTE-P

SLEEVE 73-1-172E13

STEEL, WDX1314, WDX1315 OR WDX 1335
FINISH

MIN. PHYSICAL PROPERTIES

YP ____ 60,000 | EL. ____ 12%
RED. ____ 30%

NOTES:-

A- INDUCTION HEAT OR METHOD APPROVED BY THE OFFICE OF THE CHIEF OF ORDNANCE, TO BE USED ON ALL BRAZING OR SOLDERING OPERATIONS THROUGHOUT.
B- MUST WITHSTAND 2000 LB. INTERNAL LOAD APPLIED 1/8 INCH PER MINUTE BEFORE AIR PRESSURE TEST.
C- BEFORE COATING, ASSEMBLY MUST WITHSTAND AN INTERNAL AIR PRESSURE TEST OF 200 P.S.I., FOR ONE MINUTE WITHOUT LEAKAGE.
D- COAT INTERIOR SURFACE AND EXTERIOR SURFACES OF ASSEMBLY TO REAR OF SLEEVE, WITH PHENOL FORMALDEHYDE RESIN VARNISH.
E- AFTER COATING, CAVITY MUST RECIEVE A FULL LENGTH PLUG GAGE OF .793 MIN. DIA. AND 12.48 MIN. LENGTH.
F- MAX. ECCENTRICITY (1/2 DIAL READING) BETWEEN CLOSED END OF ASSEMBLY AND 1.233-.003 DIA. OF SLEEVE .020
G- APPLY A LIGHT COAT OF SHELL GREASE TO EXTERIOR SURFACE OF SLEEVE.
H- CASING MUST BE FLUSH OR BELOW FACE OF SLEEVE.
K- STAMP ON FACE OF SLEEVE WITH 1/8 LETTERS AND FIGURES, LOT NUMBER, (INCLUDING INITIALS OR SYMBOL OF MANUFACTURER), AND DESIGNATION.
L- SPIN END CLOSED AFTER HEATING FROM 2000°F. TO 2100°F. FLATTEN END OF TUBE AFTER SPINNING, BY FORGING AT APPROX. 1400°F. ADDED THICKNESS PERMITTED UP TO .1345 MAX, PROVIDED A THICKNESS GREATER THAN .103 IS ADDED TO BASIC LENGTH (12.275-.030) OF ASSEMBLY.
M- SIZE TUBE TO 1.018-.003 O.D. (OR 1.001-.003 AS INDICATED) FOR DEPTH OF 1.700+.125. EXPANSION (OR CONTRACTION) TO BE BLENDED WITHIN .380 MAX. AREA AS SHOWN.
N- FORM FLARE ON CASING AFTER PRESS FIT TO SLEEVE.
P- IF MADE BY COLD DRAWING, NO PHYSICAL PROPERTIES SPECIFIED, PROVIDED SLEEVE IS NOT HOT WORKED, OR ANNEALED, AFTER LAST TWO COLD FORMING OPERATIONS, OTHER THAN SILVER BRAZING.
Q- STEEL SLEEVE ON CLOSED END OF CASING SHALL PASS THROUGH RING GAGE OF 1.220 DIA. AFTER ASSEMBLY, BRAZING AND PAINTING.

REMOVE ALL BURRS.

WITH NEW TRACING 73-1-172A SUPERSEDES OLD TRACING 73-1-172 UNDER REVISION DATE OF MARCH 14, 1945.

CASING, BURSTER, M5. ASSEMBLY AND DETAILS

OCTOBER 5, 1940

REVISIONS

11	3-22-43
12	3-14-45
13	8-15-45

DRG. PERTAINS TO

CLASS	DIVISION	DRAWING	FILE
73	1	172	

TOLERANCE ON DIMENSIONS NOT OTHERWISE SPECIFIED
DECIMAL ±
FRACTIONAL ±
ANGULAR ±

D'FTSMAN S.A.K. | TRACER S.A.K. | ENGINEER | CHECKER | HEAD ENGINEER

SUBMITTED:- E.M. Gallagher, LT. COL., ORD. DEPT. U.S.A.

EXAMINED:- D.M. Bachelor, CAPT., ORD. DEPT. U.S.A.

APPROVED BY ORDER OF THE CHIEF OF ORDNANCE:- C.S. Ried, BG. A., COL., ORD. DEPT. U.S.A.

D

ORDNANCE DEPT., U.S.A.

LIST OF PARTS

LINE NO	NAME OF PART	NUMBER REQ'D PER COMPONENT	PIECEMARK (a)	MATERIAL: SIZE OR FORM	MATERIAL: KIND	MATERIAL: GRADE	MATERIAL: SPECIFICATION NUMBER	APPROXIMATE UNIT WEIGHT (GRAINS)	APPROX. GROSS WT. OF PART STOCK FED INTO ASSEMBLIES	REMARKS
1	ASSEMBLY		73-1-172A				50-47-6	1.48		(e)
2	SLEEVE	1	73-1-172E	BAR	STEEL	WDX 1314, WDX-1315 OR WDX1335		.26		
3	TUBE, REINFORCING	1	73-1-172N	SHEET	STEEL	WD1010	57-136	.33		
4	CASING	1	73-1-172C	TUBING	SEAMLESS STEEL	WD1023, WD-1030 OR WD1035	57-180	.89		(b)
5										
6										
7										
8	ASSEMBLY (ALTERNATIVE)		73-1-172H				50-47-6	1.53		(e)
9	SLEEVE	1	73-1-172E		(a)			.26		
10	TUBE, REINFORCING	1	73-1-172N		(a)			.33		
11	CASING, ALTERNATIVE	1	73-1-172P	TUBING	SEAMLESS STEEL	WD1023, WD-1030 OR WD1035	57-180	.84		(b)
12	CUP, CLOSING	1	73-1-172R	SHEET	STEEL (COLD DRAWN STAMPING)	WD1010	57-136	.10		
13										
14										
15							50-47-6	1.48		(e)
16	ASSEMBLY (ALTERNATIVE)		73-1-172B							
17	SLEEVE, ALTERNATIVE	1	73-1-172L	SHEET	STEEL	WD 1010	57-136	.26		(c)
18	TUBE, REINFORCING	1	73-1-172N		(a)			.33		
19	CASING, ALTERNATIVE	1	73-1-172D	TUBING	SEAMLESS STEEL	WD1023, WD-1030 OR WD1035	57-180	.89		(b)
20										
21										
22										
23	ASSEMBLY (ALTERNATIVE)		73-1-172M				50-47-6	1.53		(e)
24	SLEEVE, ALTERNATIVE	1	73-1-172L		(a)			.26		
25	TUBE REINFORCING	1	73-1-172N		(a)			.33		
26	CASING, ALTERNATIVE	1	73-1-172Q	TUBING	SEAMLESS STEEL	WD1023, WD-1030 OR WD1035	57-180	.84		(b)
27	CUP, CLOSING	1	73-1-172R		(a)			.10		
28										
29										
30										
31					VARNISH, PHENOLIC, BAKED		AXS-786			(e)
32					GREASE, SHELL		50-11-37			(d)
33				.048 x .3 LONG WIRE	SOLDER, SILVER	CLASS 4	QQ-S-561			
34				.088 x .7 LONG WIRE	SOLDER, SILVER	CLASS 4	QQ-S-561			
35					FLUX, BRAZING, SILVER		4-1121			
36										

(a) - IN CASES OF REPETITION, ALL IDENTICAL PIECEMARKS ARE MADE OF SAME MATERIALS

(b) - ALTERNATIVE:- ELECTRIC RESISTANCE WELDED, STEEL TUBING, WD1023 O.R WD1030, SPEC. ST-180

(c) - ALTERNATIVE:- STEEL, BAR, COLD ROLLED WDX1314, WDX1315 OR WDX1335, SPEC. ST-107

(d) - ALTERNATIVE:- COMPOUND, RUST PREVENTIVE, LIGHT, SPEC. 2-BA OR OTHER MATERIAL APPROVED BY OFFICE OF CHIEF OF ORDNANCE.

(e) - ALTERNATIVE FINISH:- VARNISH, PHENOL FORMALDEHYDE RESIN, SPEC. 3-167, OR PHOSPHATE COATING, TYPE II FINISH, CLASS B, SPEC. ST-0-2, DRY, EXCEPT WITH 12 HOUR SALT SPRAY RESISTANCE. SEE NOTE -D, DRG 73-1-172.

LIST OF SPECIFICATIONS

LINE NO.	LIST OF SPECIFICATIONS	SPEC. NUMBER *	REQUIRED BY
1	AMMUNITION, EXCEPT SMALL ARMS AMM., GENERAL SPEC. FOR	50-0-1	DRG. 73-1-172
2			
3	CASINGS, BURSTERS FOR SHELL, METAL PARTS ASSEMBLIES	50-47-6	DRG. 73-1-172
4	COMPOUND, RUST PREVENTIVE, LIGHT	2-BA	DRG. 73-1-172
5	FLUX, BRAZING (FOR SILVER SOLDER)	4-1121	DRG. 73-1-172
6	GREASE, SHELL	50-11-37	DRG. 73-1-172
7			
8	METALS; GENERAL SPECIFICATION FOR INSPECTION OF	QQ-M-151	57-107
9			
10	STEEL, CARBON AND ALLOY, SHEETS AND STRIPS	57-136	DRG. 73-1-172
11	STEEL CARBON AND ALLOY, BARS	57-107	DRG. 73-1-172
12			
13	SOLDER	QQ-S-561	DRG. 73-1-172
14			
15	TUBING, STRUCTURAL: STEEL, CARBON AND ALLOY, SEAMLESS ETC.	57-180	DRG. 73-1-172
16	VARNISH, PHENOLIC, BAKED, UNPIGMENTED	AXS-786	DRG. 73-1-172
17	VARNISH, PHENOL FORMALDEHYDE RESIN	3-167	DRG. 73-1-172
18	FINISHES, PROTECTIVE, FOR IRON AND STEEL PARTS	ST-0-2	DRG. 73-1-172
19	CLEANING AND PREPARATION OF METAL SURFACES FOR ORGANIC PROT COATINGS	AXS-1245	DRG. 73-1-172
20			
21			
22			
23			
24			
25			
26			
27			
28			
29			
30			

* THE SPECIFICATION NUMBERS SHOWN ARE BASIC NUMBERS ONLY. WHEN A SPECIFICATION IS REVISED A LETTER IS AFFIXED TO ITS BASIC NUMBER. SPECIFICATIONS REFERRED TO IN THESE SPECIFICATIONS AND NOT LISTED HEREON, SHALL NOT APPLY.

CASING, BURSTER M5, LIST OF PARTS & LIST OF SPECS.

MARCH 14, 1945

CLASS	DIVISION	DRAWING	FILE
73	1	172A	

REVISIONS

1	8-13-45		

DRG. PERTAINS TO

TOLERANCE ON DIMENSIONS NOT OTHERWISE SPECIFIED
DECIMAL ±
FRACTIONAL ±
ANGULAR ±

D'FTSMAN K.L.M | TRACER K.L.M. | ENGINEER

CHECKER ZAH | HEAD ENGINEER

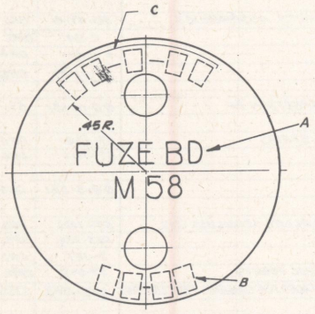
SUBMITTED:
A. M. Gallagher
CAPT. LT. COL., ORD. DEPT., U. S. A.

EXAMINED:
D. M. Bachelor
CAPT. ORD. DEPT., U. S. A.

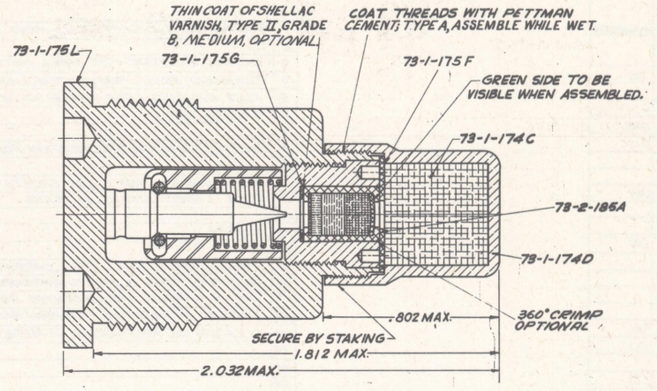
APPROVED BY ORDER OF THE CHIEF OF ORDNANCE:
C. S. Reed by A.d.
COL. ORD. DEPT., U. S. A.

D

ORDNANCE DEPT., U. S. A.



STAMP WITH LETTERS AND FIGURES .093 HIGH AND .01 DEEP
A- FUZE DESIGNATION
B- DATE (MONTH AND YEAR) LOADED
C- LOT NUMBER



ASSEMBLY 79-1-174A9

LIST OF PARTS

LINE NO.	NAME OF PART	NUMBER REQ'D PER COMPONENT	PIECE-MARK	MATERIAL: SIZE OR FORM	MATERIAL: KIND	MATERIAL: GRADE	MATERIAL: SPEC. NUMBER	APPROXIMATE UNIT WEIGHT (GRAINS)	APPROX. GROSS WT. OF RAW STOCK PER 1000 ASSEMBLIES	REMARKS
1	ASSEMBLY		79-1-174A				MIL-F-1036A	.30 LB.		
2	BODY ASSEMBLY		79-1-175L					1953.		
3	DETONATOR ASSEMBLY, M18		78-2-185A				50-78-7	10.1		
4										
5	BODY	1	79-1-175Q	ROD	BRASS	"B" HALF HARD	QQ-B-611	1747.		(h)
6	CAP, CLOSING	1	79-1-174D	ROD	BRASS	"B" HALF HARD	QQ-B-611	127.		(k)(e)(c)
7										
8										
9										
10	CUSHION	1	79-1-175G	SHEET	CORK-COMPOSITION	CLASS I	HH-C-576	.06		
11										
12	WASHER	1	79-1-175F	SHEET	ALUMINUM	COND "A"	QQ-A-561	4.1		
13										
14										
15										
16										
17	HOLDER, DETONATOR	1	79-1-175E	ROD	BRASS	"B" HALF HARD	QQ-B-611	90.		
18										
19	PELLET, BOOSTER	1	79-1-174C		TETRYL	I, CLASS a	JAN-T-339	28.		
20										
21	PIN, FIRING	1	78-1-175A	BAR	STEEL	FS 1117	QQ-S-633	36.		(h)(Pa)(Pc)
22										
23	RING, RESISTANCE	1	79-1-175D	WIRE	BRASS, SPRING	COMP. "C"	QQ-W-321	4.8		(d)
24	SLEEVE	1	79-1-175B	BAR	STEEL	FS 1117	QQ-S-633	66.		(Pa)(Pb)(Pc)
25	SPRING	1	79-1-175C	WIRE	STEEL	COMP. A	QQ-W-470	3.6		(Pa)
26					BARIUM STEARATE		JAN-B-366			
27					CALCIUM STEARATE		JAN-C-263			
28					CEMENT, PETTMAN	TYPE A	JAN-C-99			
29					GRAPHITE	I OR II	JAN-G-155			
30					SHELLAC VARNISH	TYPE II, B	TT-V-91			

(a) ALTERNATIVE MATERIAL:-(f) COMMERCIAL BRASS, STRIP, COMPOSITION "C", HALF-HARD, SPEC. QQ-B-611. (e)
(d) ALTERNATIVE MATERIAL:-BERYLLIUM COPPER WIRE, CONDITION A, SPEC MIL-C-947, EXCEPT FOR HEAT TREATMENT.

(c) ALTERNATIVE MATERIAL:-(f) COMMERCIAL BRASS STRIP, COMPOSITION "C" SOFT, SPEC QQ-B-611 TO BE WORKED TO ROCKWELL B-50 MINIMUM.
(e) STRAIN RELIEF ANNEAL AT 500°F FOR ONE HOUR.
(f) ALTERNATIVE MATERIALS ARE INTENDED TO BE USED ONLY WHEN PRESCRIBED MATERIALS ARE NOT AVAILABLE.
(h) ALTERNATIVE MATERIAL:-(f) STEEL, FS1117, AS-COLD-FINISHED SPEC QQ-S-633 (Pa)(Pb)(Pc)

(k) ALTERNATIVE MATERIAL:-(f) STEEL, SHEET, WD1010 OR WD1020, COLD-ROLLED, TEMPER NO 4 (SOFT SKIN-ROLLED), FINISH NO. 3 (BEST BRIGHT) SPEC. 57-136. (Pa) (Pb) (Pc).
(P) PROTECTIVE FINISHES, SPEC. 57-0-2
(Pa) TYPE I, CLASS TS.
(Pb) TYPE I, CLASS ES.
(Pc) TYPE I, CLASS RSC.

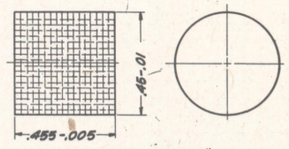
LIST OF SPECIFICATIONS AND STANDARDS

LINE NO.		SPEC OR STD NO. *	REQUIRED BY
1	ALUMINUM; PLATES AND SHEETS	QQ-A-561	DWG 73-1-175
2	AMMUNITION, EXCEPT SMALL ARMS AMMUNITION, GENERAL SPEC. FOR	50-0-1	DWG 73-1-174
3	BARIUM STEARATE	JAN-B-366	DWG 73-1-174
4	CEMENT, PETTMAN	JAN-C-99	DWG 73-1-174
5	BRASS, COMMERCIAL; BARS, PLATES, RODS, SHAPES, SHEETS AND STRIPS	QQ-B-611	DWG 73-1-175
6	FUZE, BASE DETONATING, M58, METAL PARTS FOR	50-40-22	DWG 73-1-174
7	DETONATORS, LOADING, ASSEMBLING AND PACKING	50-78-7	DWG 73-2-185
8	GRAPHITE (FOR USE IN AMMUNITION)	JAN-G-155	DWG 73-1-174
9	FUZE, BASE DETONATING, M58, LOADING, ASSEMBLING AND PACKING	MIL-F-1036A	DWG 73-1-174
10	FINISHES, PROTECTIVE, FOR IRON AND STEEL PARTS	57-0-2	DWG 73-1-174
11	CORK-COMPOSITION, GASKET AND SHEET	HH-C-576	DWG 73-1-175
12	METALS; GENERAL SPEC. FOR INSPECTION OF	QQ-M-151	QQ-B-611
13	CALCIUM STEARATE	JAN-C-263	DWG 73-1-174
14	COPPER-BERYLLIUM-ALLOY; BARS, RODS, PLATES, STRIPS AND WIRE	MIL-C-947	DWG 73-1-175
15	STEEL, CARBON AND ALLOY; SHEETS AND STRIPS	57-136	DWG 73-1-174
16	STEEL, CARBON; BARS, (GENERAL PURPOSE)	QQ-S-633	DWG 73-1-175
17	TETRYL	JAN-T-339	DWG 73-1-174
18	VARNISH; SHELLAC	TT-V-91	DWG 73-1-174
19	WIRE; BRASS	QQ-W-321	DWG 73-1-175
20	WIRE, STEEL (CARBON); SPRING, MUSIC	QQ-W-470	DWG 73-1-175
21			
22	ORDNANCE FINISHES (SURFACE ROUGHNESS)	URAX6	DWG 73-1-175
23	STANDARD FOR DIMENSIONING AND TOLERANCING	30-1-7	DWG 73-1-175
24	SURFACE ROUGHNESS, WAVINESS AND LAY	MIL-STD-10	DWG 73-1-175
25			

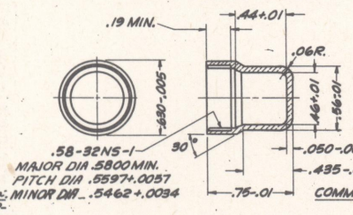
* THE SPECIFICATION AND STANDARD NUMBERS SHOWN ARE BASIC NUMBERS ONLY. WHEN REVISED A LETTER IS AFFIXED TO THE BASIC NUMBER. SPECIFICATIONS REFERRED TO IN THE SPECIFICATIONS AND NOT LISTED HEREON, SHALL NOT APPLY.

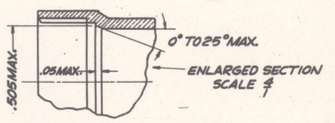
LIST OF DRAWINGS

LINE NO.		DRAWING NUMBER
1	ASSEMBLY	73-1-174
2	DETAILS	73-1-176
3	PACKING CARTON	76-7-639
4	PACKING BOX	76-1-1267
5	PACKING AND MARKING OF BOX	20-4-613
6		
7	DETONATOR ASSEMBLY, M18	73-2-185

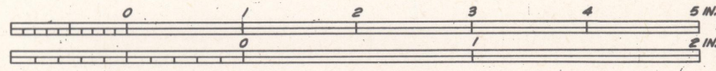


PELLET, BOOSTER 79-1-174C9
27.30-A6 GRAINS (421-7 MILLIGRAMS) TETRYL, GRADE I, CLASS a; SHALL CONTAIN NOT MORE THAN 2% TOTAL BINDER-LUBRICANTS CONSISTING OF GRAPHITE, BARIUM STEARATE AND/OR CALCIUM STEARATE IN ANY PROPORTION. ADVISORY: NOT LESS THAN 0.25% GRAPHITE, GRADE I OR II. ADVISORY DATA:- PELLETING PRESSURE 10,000 LB PER SQ IN. SPECIFIC GRAVITY 1.45 TO 1.60.





CAP, CLOSING 79-1-174D9
COMMERCIAL BRASS, ROD, COMPOSITION "B"; HALF HARD
FINISH ALL OVER 125



NOTICE:- THIS DRAWING SHALL NOT BE USED OR REPRODUCED EITHER WHOLLY OR IN PART, EXCEPT WHEN AUTHORIZED IN CONNECTION WITH UNITED STATES GOVERNMENT PROCUREMENT.

FUZE, BASE DETONATING, M58. ASSEMBLY AND DETAILS.

FEB. 1, 1941

CLASS	DIVISION	DRAWING	FILE
73	1	174	

REVISIONS

1	9-3-41.	7	8-15-45
2	1-2-42	8	10-1-45
3	5-20-42	9	7-27-50
4	7-7-42		
5	8-14-42		
6	7-8-43		

TOLERANCE ON DIMENSIONS NOT OTHERWISE SPECIFIED
DECIMAL ±
FRACTIONAL ±
ANGULAR ±

DRG. PERTAINS TO

D'PTMAN R.M.D | TRACER 9.m. | ENGINEER

CHECKER PUTTS | ENGINEER M.T.

SUBMITTED:- COL., ORD. DEPT. U.S.A.

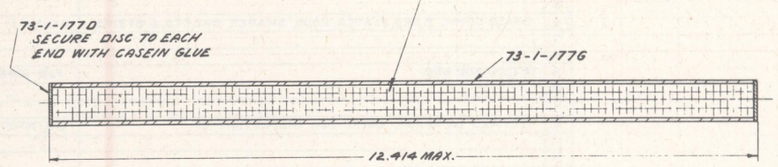
EXAMINED:- LT. COL., ORD. DEPT. U.S.A.

APPROVED BY ORDER OF THE CHIEF OF ORDNANCE:- LT. COL., ORD. DEPT. U.S.A.

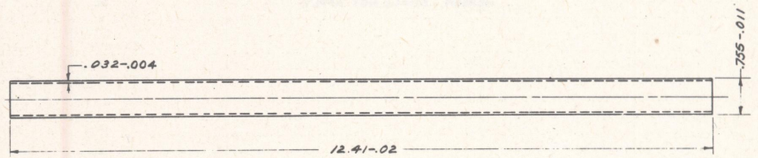
D

ORDNANCE DEPT. U.S.A.

CHARGE, BURSTER 73-1-177 F3
APPROX. 1800 GRAINS (117. GRAMS) TETRYTOL
SPECIFIC GRAVITY 1.57 MIN.



ASSEMBLY 73-1-177 A4



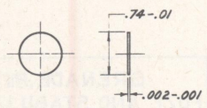
TUBE BURSTER 73-1-177 G4

STEEL TUBING, ELECTRIC-RESISTANCE-WELDED, TYPE III, WD 8630
COAT INTERIOR AND EXTERIOR SURFACES WITH PHENOL-FORMALDEHYDE RESIN VARNISH OR BAKED PHENOLIC VARNISH.

MIN. PHYSICAL PROPERTIES

T.S. 95,000	EL. IN 2 IN. 10%
Y.S. 75,000	

STRAIGHTNESS:- THE CURVATURE OF THE TUBE SHALL NOT EXCEED .022 IN. PER 12 IN. OF LENGTH.

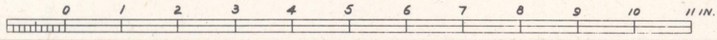


DISC 73-1-177 D

PAPER ONION SKIN

DIAMETER DIMENSION CONTROLS TOOL MANUFACTURE.

REMOVE ALL BURRS



LIST OF PARTS

LINE NO.	NAME OF PART	NUMBER REQD. PER COMPONENT	PIECE-MARK	MATERIAL: SIZE OR FORM	MATERIAL: KIND	MATERIAL: GRADE	MATERIAL: SPEC. NUMBER	APPROX. UNIT WEIGHT (GRAINS)	APPROX. GROSS WT. OF RAW STOCK PER 1000 ASSEMBLIES	REMARKS
1	ASSEMBLY		73-1-177A				50-52-1	.51 LB.		
2	CHARGE, BURSTER	1	73-1-177F		TETRYTOL			1800.0		(a)
3	DISC	2	73-1-177D	SHEET	PAPER, ONION SKIN		50-11-49			(d)
4										
5										
6	TUBE, BURSTER	1	73-1-177G	TUBING	STEEL, ELECTRIC-RESISTANCE-WELDED, TYPE III	WD8630	57-180	1785.0		(b)
7										
8										
9					GLUE, CASEIN		C-G-456			
10										
11					VARNISH, PHENOL-FORMALDEHYDE, RESIN		3-167			(c)
12										
13										
14										
15										
16										

(a) TETRYTOL :- TETRYL 70 % ± 2%, SPEC. 50-13-4
TRINITROTOLUENE 30 % ± 2%, SPEC. 50-13-5
(ABOVE PERCENTAGES ARE BY WEIGHT)

(b) HEIGHT OF THE INSIDE WELDING FLASH RIDGE NOT TO EXCEED .010 MAX. AND TO BE FREE OF SHARP ANGLES AND ROUGH EDGES.

(c) ALTERNATIVE :- VARNISH, PHENOLIC, BAKED (UNPIGMENTED) SPEC. AXS-736.

(d) REQUIRED ONLY WHEN BURSTER CHARGE IS NOT ASSEMBLED INTO SHELL AT POINT OF MANUFACTURE.

LINE NO.	LIST OF SPECIFICATIONS	SPEC. NUMBER *	REQUIRED BY
1	AMMUNITION, EXCEPT SMALL ARMS AMMUNITION, GEN. SPEC. FOR	50-0-1	DRG. 73-1-177
2			
3	CHARGES, BURSTER, FOR SHELL, LOADING ASSEMBLING AND PACKING	50-52-1	DRG. 73-1-177
4	GLUE, CASEIN TYPE, WATER RESISTANT	C-G-456	DRG. 73-1-177
5			
6	METALS; GENERAL SPECIFICATION FOR INSPECTION OF	QQ-M-151	57-180
7			
8	PAPER, GENERAL SPECIFICATIONS	UU-P-31	50-11-49
9	PAPER, ONION SKIN	50-11-49	DRG. 73-1-177
10			
11	TETRYL	50-13-4	DRG. 73-1-177
12	TRINITROTOLUENE	50-13-5	DRG. 73-1-177
13			
14	TUBES, BURSTER, FOR SHELL, METAL PARTS	AXS-1131	DRG. 73-1-177
15	TUBING, ROUND, MECHANICAL AND STRUCTURAL; STEEL, CARBON, ETC.	57-180	DRG. 73-1-177
16			
17	VARNISH, PHENOL-FORMALDEHYDE, RESIN	3-167	DRG. 73-1-177
18	VARNISH, PHENOLIC BAKED (UNPIGMENTED)	AXS-736	DRG. 73-1-177
19			
20			
21			
22			
23			
24			
25			

* THE SPECIFICATION NUMBERS SHOWN ARE BASIC NUMBERS ONLY. WHEN A SPECIFICATION IS REVISED A LETTER IS AFFIXED TO ITS BASIC NUMBER. SPECIFICATIONS REFERRED TO IN THESE SPECIFICATIONS AND NOT LISTED HEREON SHALL NOT APPLY.

THIS BURSTER CHARGE FOR USE IN THE FOLLOWING:-
SHELL, CHEMICAL, 105 MM, M60.

SUPERSEDES OLD TRACING 73-1-177 UNDER REVISION DATE OF FEBRUARY 19, 1945

CHARGE, BURSTER M5 ASSEMBLY AND DETAILS

JANUARY 31, 1941

CLASS	DIVISION	DRAWING	FILE
73	1	177	

REVISIONS

2	2-24-44
3	2-10-45
4	8-15-45

TOLERANCE ON DIMENSIONS NOT OTHERWISE SPECIFIED
DECIMAL ±
FRACTIONAL ±
ANGULAR ±

DRG. PERTAINS TO

D'FTSMAN D.C.S. | TRACER C.W.F. | ENGINEER
CHIEF DIV. | O.C. | HEAD ENGINEER

SUBMITTED:
C. M. Gallagher
LT. COL., ORD. DEPT. U.S.A.

EXAMINED:
J. F. McCarlie
LT. COL., ORD. DEPT. U.S.A.

APPROVED BY ORDER OF THE CHIEF OF ORDNANCE:
C. S. Reed by a
COL., ORD. DEPT. U.S.A.

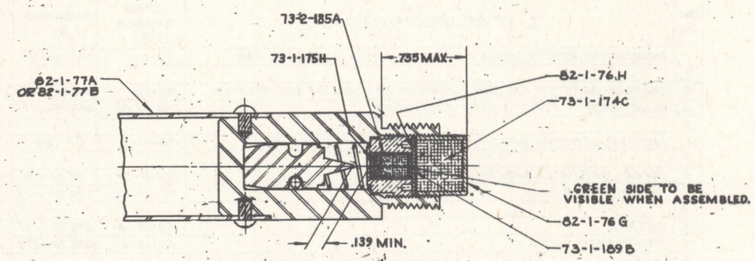
D

ORDNANCE DEPT. U.S.A.

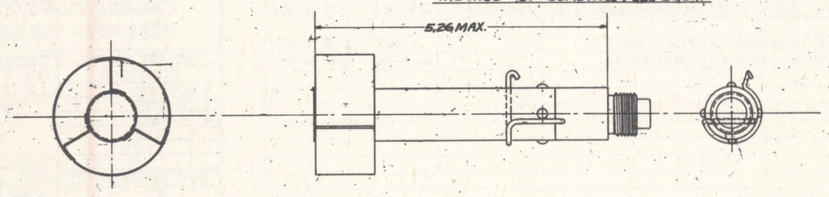
LIST OF PARTS

LINE NUMBER	NAME OF PART	NUMBER REQ'D. PER COMPONENT	PIECE MARK	MATERIAL: SIZE OR FORM	MATERIAL: KIND	MATERIAL: GRADE	MATERIAL: SPEC. NUMBER	APPROXIMATE UNIT WEIGHT (LBS)	APPROX. GROSS WT. OF RAW STOCK PER 1000 ASSEMBLIES	REMARKS
1	ASSEMBLY, FUZE & STABILIZER		73-1-189A					.47 LB.		
2	ASSEMBLY, DETONATOR, M-18		73-2-185A				FXS-1048	.6 GRAM		
3	ASSEMBLY, STABILIZER	1	82-1-77A					.46 LB.		
4	ASSEMBLY, STABILIZER (ALT.)		82-1-77B					.46 LB.		
5										
6										
7										
8	COVER, BOOSTER CONTAINER	1	73-1-189B	SHEET	ONION SKIN		COMMERCIAL			
9	CUP, BOOSTER	1	82-1-76G	ROD	BRASS	"B" HALF HARD	QQ-B-611	7 GRAMS		
10	[illegible]									
11	CUSHION	1	73-1-175H	SHEET	COMPRESSED CORK		COMMERCIAL	.06 GRAINS		
12										
13										
14										
15	[illegible] DETONATOR									
16	DISC, DETONATOR RETAINING	1	82-1-76H	SHEET	ALUMINUM	TYPE 2, CLASS A	QQ-A-561	45 GRAINS		
17										
18										
19	PELLET, BOOSTER	1	73-1-174C		TETRYL		50-13-4	1.8 GRAMS		
20	[illegible] DETONATOR									
21										
22										
23										
24					INK, PRINTERS RED		COMMERCIAL			
25										
26										
27										

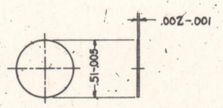
[illegible] DETONATOR
[illegible] CLOSE
[illegible] HEAD AZIDE
[illegible] CAVITY



DOUBLE SIZE SECTION ON ℄ SHOWING METHOD OF LOADING FUZE BODY.



ASSEMBLY 73-1-189A3



COVER, BOOSTER CONTAINER 73-1-189B
ONION SKIN PAPER, COMMERCIAL

DIAMETER DIMENSIONS CONTROL TOOL MANUFACTURE.

LINE NO.	LIST OF SPECIFICATIONS	SPECIFICATION NUMBER *	REQUIRED BY
1	ALUMINUM PLATES AND SHEETS	QQ-A-561	DRG-73-1-189
2	AMMUNITION, GENERAL SPECIFICATIONS FOR	50-0-1	DRG-73-1-189
3			
4			
5			
6	BRASS COMM. BARS, PLATES, RODS, SHAPES, SHEETS, & STRIPS	QQ-B-611	DRG-73-1-175
7			
8			
9	DETONATOR M18	FXS-1048	DRG-73-1-189
10			DRG-73-1-175
11			
12	METALS, GENERAL SPEC. FOR INSPECTION OF	QQ-M-151	QQ-B-611
13			
14			
15			
16			
17			
18	TETRYL	50-13-4	DRG-73-1-174
19			
20			

* THE SPECIFICATION NUMBERS SHOWN ARE BASIC NUMBERS ONLY. WHEN A SPECIFICATION IS REVISED A LETTER IS AFFIXED TO ITS BASIC NUMBER. SPECIFICATIONS REFERRED TO IN THESE SPECIFICATIONS AND NOT LISTED HEREON, SHALL NOT APPLY.

NOTICE THIS DRAWING MAY NOT BE USED NOR REPRODUCED EITHER WHOLLY OR IN PART EXCEPT WITH AUTHORIZATION IN CONNECTION WITH UNITED STATES GOVERNMENT PROCUREMENT

0 1 2 3 4 5 6 7 8 9 10 INCHES.

GRENADE, RIFLE, AT, M9A1
FUZE AND STABILIZER ASSEMBLY

APRIL 14, 1942

REVISIONS		CLASS	DIVISION	DRAWING FILE
1	11-8-42	73	1	189
2	3-31-43			
3	8-15-45			

SYMBOL

D'FTSMAN	TRACER	L'D'G. D'FTSMAN
C. DRAHN	F. KURTH	
CHECKER	CHECKER	CHIEF D'FTSMAN
T.J.	T.J.	

SUBMITTED
MAJOR, ORD. DEPT. USA

EXAMINED
LT. COL. ORD. DEPT. USA

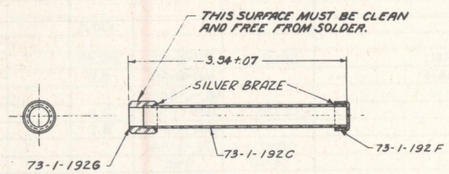
APPROVED
COL. ORD. DEPT.

DRG. PERTAINS TO

D

ORDNANCE OFFICE WAR DEPT

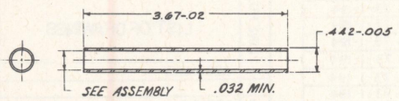
.345 DIA PLUG GAGE MUST ENTER FREELY FOR ENTIRE LENGTH.



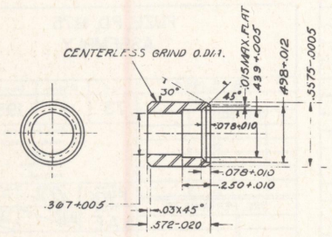
BURSTER CASING ASSEMBLY 73-1-192A3

NOTE:-
A-BURSTER CASING ASSEMBLY SHALL NOT LEAK WHEN SUBJECTED TO AN INTERNAL AIR PRESSURE TEST OF 85 LBS. PER SQ.IN. MAINTAINED FOR 60 SECONDS WITH ASSEMBLY COMPLETLY SUBMERGED IN SUITABLE LIQUID
B-APPLY LIGHT COAT OF ENGINE OIL TO PRESS FIT SURFACE

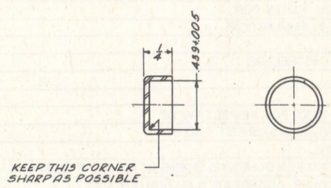
C-ALLOWABLE ECCENTRICITY BETWEEN .345 PLUG AND OUTSIDE DIAMETER OF BUSHING .020



CASING, BURSTER 73-1-192C1
STEEL TUBING, TYPE III, WD1010, WD1015 OR WD 1020



BUSHING, BURSTER CASING 73-1-192G2
STEEL, WD1112, WDX13 1 OR WDX1315



CAP, BURSTER CASING 73-1-192F3
STEEL, WD1010 OR WD1015, .0359 (NO. 20 GAGE) THICK
DEEP DRAWING

REMOVE ALL BURRS

LIST OF PARTS

LINE NO	NAME OF PART	NUMBER REQ'D PER COMPONENT	PIECEMARK	MATERIAL: SIZE OR FORM	MATERIAL: KIND	MATERIAL: GRADE	MATERIAL: SPECIFICATION NUMBER	APPROX. UNIT WEIGHT (POUNDS)	APPROX. GROSS WT. OF RAW STOCK PER 1000 ASSEMBLIES	REMARKS
1	BURSTER CASING ASSEMBLY		73-1-192A				AXS-1196	.07		
2										
3										
4	BUSHING, BURSTER CASING	1	73-1-192B		STEEL	WD1112, WDX1314 OR WDX1315	57-107			
5										
6	CAP, BURSTER CASING	1	73-1-192F	STRIP	STEEL	WD1010 OR WD1012	57-136			
7										
8	CASING BURSTER	1	73-1-192C	TUBING	STEEL TUBING, TYPE III	WD1010, WD1015 OR WD1020	57-180			
9										
10					SOLDER, SILVER	CLASS 4 OR 6	QQ-S-561			
11					FLUX, BRAZING		4-1121			
12					OIL, ENGINE	SAE 10	2-104			
13										
14										
15										
16										

LIST OF SPECIFICATIONS

LINE NO		SPECIFICATION NUMBER *	REQUIRED BY
1	AMMUNITION, EXCEPT SMALL ARMS AMMUNITION, GENERAL SPEC. FOR	50-0-1	DRG. 73-1-192
2	FLUX, BRAZING (FOR SILVER SOLDER)	4-1121	DRG. 73-1-192
3	METALS, GENERAL SPEC. FOR INSPECTION OF	QQ-M-151	57-107
4			
5	GRENADE, RIFLE, SMOKE (WP) M19A1 METAL PARTS FOR	AXS-1196	DRG. 73-1-192
6			
7	STEEL, CARBON AND ALLOY, BARS	57-107	DRG. 73-1-192
8	STEEL, CARBON AND ALLOY, SHEET AND STRIP	57-136	DRG. 73-1-192
9	OIL, ENGINE	2-104	DRG. 73-1-192
10	TUBING, ROUND, MECH. & STRUCT.: STEEL, CARBON & ALLOY, SEAMLESS, WELDED & BRAZED	57-180	DRG. 73-1-192
11			
12	SOLDER, SILVER	QQ-S-561	DRG. 73-1-192
13			
14			

* THE SPECIFICATION NUMBERS SHOWN ARE BASIC NUMBERS ONLY. WHEN A SPECIFICATION IS REVISED A LETTER IS AFFIXED TO ITS BASIC NUMBER. SPECIFICATIONS REFERRED TO IN THESE SPECIFICATION AND NOT LISTED HEREON, SHALL NOT APPLY.

CLASSIFICATION CHANGED TO UNCLASSIFIED
BY AUTHORITY OF OCM NO. 23532
BY M. Thompson

[redacted]

THIS BURSTER CASING IS USED IN THE FOLLOWING: GRENADE, RIFLE, SMOKE, M19A1 DRG. 82-0-109

OBSOLESCENT.
SCALE:- 1/1, 2/1

CASING, BURSTER, ASSEMBLY & DETAILS

FEBRUARY 5, 1944

CLASS	DIVISION	DRAWING	FILE
73	1	192	

REVISIONS

1	APRIL 10 44		
2	10-25-44		
3	8-15-45		
4	7-8-48		

TOLERANCE ON DIMENSIONS NOT OTHERWISE SPECIFIED
DECIMAL ±
FRACTIONAL ±
ANGULAR ±

DRG. PERTAINS TO
82-0-109

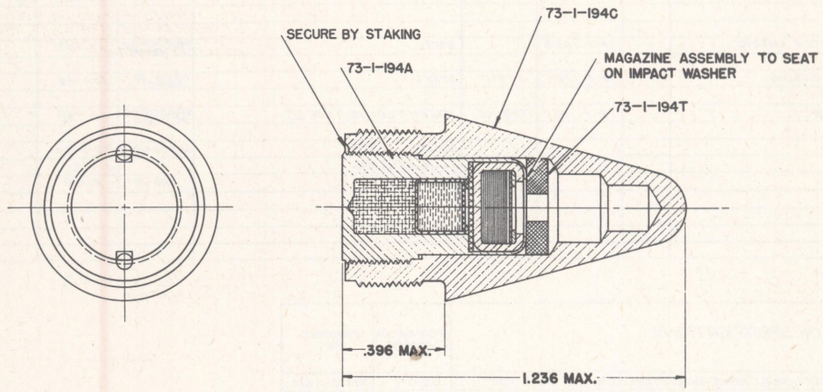
D'FTSMAN	TRACER	ASSOC. ENGINEER
JPM	JPM	EL
CHECKER	O.C.	PRIN. ENGINEER
WR		SDK

SUBMITTED:
H. S. Bowman
CHIEF ENGINEER, ORD. DEPT., U.S.A.
EXAMINED:
W. H. Holler
COL., ORD. DEPT., U.S.A.
APPROVED BY ORDER OF THE CHIEF OF ORDNANCE:
J. G. Lukes
COL., ORD. DEPT., U.S.A.

D

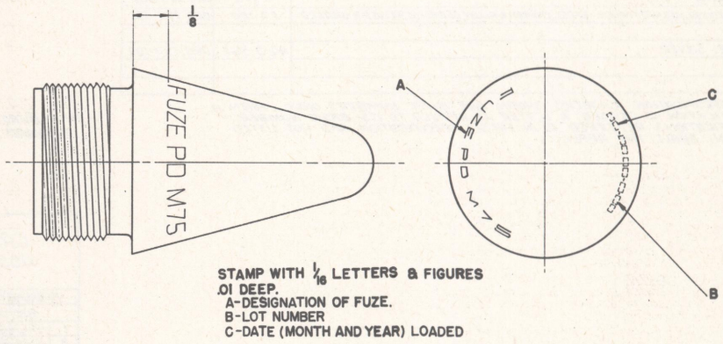
ORDNANCE DEPT., U.S.A.

CLASS & DIV.



LIST OF PARTS

LINE NO.	NAME OF PART	NUMBER REQ'D PER COMPONENT	PIECE MARK	MATERIAL: SIZE OR FORM	MATERIAL: KIND	MATERIAL: GRADE	MATERIAL: SPEC NUMBER	APPROXIMATE UNIT WEIGHT (GRAINS)	APPROX GROSS WT OF RAW STOCK PER 1000 ASSY'S	REMARKS
1	ASSEMBLY		73-I-193 A				AXS-1210	362.0		
2	DETONATOR, ASSEMBLY		73-I-194 G					16.2		
3	LOWER DETONATOR ASSEMBLY		73-I-194 M							
4	MAGAZINE, ASSEMBLY		73-I-194 A					100.11		
5										
6	BODY	1	73-I-194 C	ROD	BRASS, COMMERCIAL	COMP B	QQ-B-611	247.50		
7	CHARGE, DETONATOR	1	73-I-194 F		MERCURY FULMINATE		JAN-M-219	5.8		
8	CHARGE, LOWER DETONATOR	1	73-I-194 P		LEAD AZIDE		MIL-L-3055			
9	CHARGE, MAGAZINE	1	73-I-194 B		TETRYL	I, CLASS α	JAN-T-339	2.9		
10	CUP, DETONATOR	1	73-I-194 H	STRIP	GILDING METAL		JAN-G-439	8.2		
11	CUP, LOWER DETONATOR	1	73-I-194 N	STRIP	ALUMINUM	COND A	QQ-A-561			
12	DISC	1	73-I-194 Q		FELT	NO. 10	8-15			
13	DISC, DETONATOR	1	73-I-194 K	SHEET	LEAD	B	QQ-L-201	0.4		
14	DISC, LOWER DETONATOR	1	73-I-194 R	STRIP	ALUMINUM	COND A	QQ-A-561			
15	MAGAZINE	1	73-I-194 S	ROD	BRASS, COMMERCIAL	COMP B	QQ-B-611	88.43		
16	WASHER, DETONATOR	1	73-I-194 L	STRIP	COPPER	HARD	QQ-C-501	1.7		
17	WASHER, IMPACT	1	73-I-194 T	STRIP	ALUMINUM ALLOY (AL-24)	COND T	QQ-A-355	4.3		
18										
19					BARIUM STEARATE		JAN-B-366			
20					CALCIUM STEARATE		JAN-C-263			
21					GRAPHITE	I OR II	JAN-G-155			
22					LACQUER ENAMEL, RED	I	JAN-L-73			
23										



STAMP WITH 1/16 LETTERS & FIGURES .01 DEEP.
A-DESIGNATION OF FUZE.
B-LOT NUMBER
C-DATE (MONTH AND YEAR) LOADED

ASSEMBLY 73-I-193A5

LIST OF SPECIFICATIONS AND STANDARDS

LINE NO.	LIST OF SPECIFICATIONS AND STANDARDS	SPEC OR STD NUMBER *	REQUIRED BY
1	AMMUNITION, EXCEPT SMALL ARMS AMMUNITION, GENERAL SPEC FOR	50-0-1	DWG 73-1-194
2	ALUMINUM (AL-2); PLATE AND SHEET	QQ-A-561	DWG 73-1-194
3	ALUMINUM-ALLOY (AL-24), PLATES, SHEETS AND STRIPS	QQ-A-355	DWG 73-1-194
4	BARIUM STEARATE	JAN-B-366	DWG 73-1-194
5	BRASS, COMMERCIAL BARS, PLATES, RODS, SHAPES, SHEETS & STRIPS	QQ-B-611	DWG 73-1-194
6	CALCIUM STEARATE	JAN-C-263	DWG 73-1-194
7	COLOR CARD SUPPLEMENT	3-I	JAN-L-73
8	COPPER, BARS, PLATES, RODS, SHAPES, SHEETS, AND STRIPS	QQ-C-501	DWG 73-1-194
9	FELT, PRESSED	8-15	DWG 73-1-194
10	FUZE, P.D., M75, LOADING, ASSEMBLING, AND PACKING	AXS-1210	DWG 73-1-193
11	FUZE, P.D., M75, METAL PARTS FOR	MIL-F-2096	DWG 73-1-194
12	GRAPHITE (FOR USE IN AMMUNITION)	JAN-G-155	DWG 73-1-194
13			
14	LACQUER ENAMEL, LUSTRELESS	JAN-L-73	DWG 73-1-194
15	LEAD AZIDE	MIL-L-3055	DWG 73-1-194
16	LEAD, SHEET	QQ-L-201	DWG 73-1-194
17	METALS, GENERAL SPEC FOR INSPECTION OF	QQ-M-151	QQ-B-611
18	METAL, GILDING ($^{95}/_{5}$ BRASS); SHEET AND STRIP	JAN-G-439	DWG 73-1-194
19	MERCURY FULMINATE	JAN-M-219	DWG 73-1-194
20	PACKING AND MARKING FOR DOMESTIC SHIPMENT OF INERT AMM, ETC	MIL-P-10025	DWG 73-1-193
21	PAINT, VARNISH, LACQUER, AND RELATED MATERIALS; ETC.	TT-P-141	JAN-L-73
22			
23	TETRYL	JAN-T-339	DWG 73-1-194
24	VARNISH; SHELLAC	TT-V-91	DWG 73-1-194
25			
26	ORDNANCE FINISHES (SURFACE ROUGHNESS)	URAX6	DWG 73-1-194
27	STANDARD FOR DIMENSIONING AND TOLERANCING	30-1-7	DWG 73-1-194
28	SURFACE ROUGHNESS, WAVINESS, AND LAY	MIL-STD-10	DWG 73-1-194

* THE SPEC AND STD NUMBERS SHOWN ARE BASIC NUMBERS ONLY. WHEN REVISED A LETTER IS AFFIXED TO THE BASIC NUMBER. SPECIFICATIONS REFERRED TO IN THE SPECIFICATIONS AND NOT LISTED HEREON SHALL NOT APPLY.

0 1 IN.

LIST OF DRAWINGS

LINE NO.	LIST OF DRAWINGS	DRAWING NUMBER
1	ASSEMBLY	73-I-193
2		
3	DETAILS	73-I-194
4		
5	PACKING BOX	P-81447
6	PACKING CARTON	P-81455

FUZE, PD, M75 ASSEMBLY

FEB. 15, 1944

REVISIONS

5	6-12-50				

DRG. PERTAINS TO

CLASS	DIVISION	DRAWING	FILE
73	I	193	

TOLERANCE ON DIMENSIONS NOT OTHERWISE SPECIFIED
DECIMAL ±
FRACTIONAL ±
ANGULAR ±

DRAFTSMAN F.W.K. TRACED [illegible] ENGINEER [illegible] 9/7/44
CHECKED A.A.F. CHECKED [illegible] ENGINEER [illegible] 1944

SUBMITTED: D. R. Beeman, ORD. ENGR, ORD. DEPT., U. S. A.

EXAMINED: C. R. Dutton, COL., ORD. DEPT., U. S. A.

APPROVED BY ORDER OF THE CHIEF OF ORDNANCE: [illegible], COL., ORD. DEPT., U. S. A.

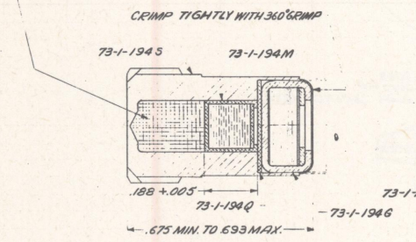
D

ORDNANCE DEPT., U. S. A.

SUPERSEDES 73-I-193 WITH CHANGE JUNE 12, 1950

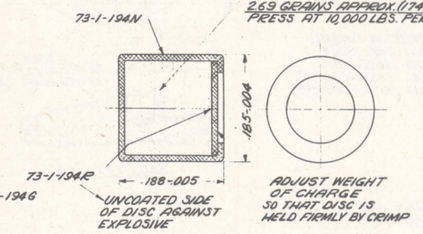
CHARGE, MAGAZINE 73-1-194B5

APPROX. 2.93 GRAINS (190 MGS.) TETRYL, GRADE I, CLASS Q. SHALL CONTAIN NOT LESS THAN .25% GRAPHITE, GRADE I OR II AND NOT MORE THAN 2.% TOTAL BINDER-LUBRICANT CONSISTING OF GRAPHITE, BARIUM STEARATE AND/OR CALCIUM STEARATE IN ANY PROPORTION. RECONSOLIDATE TO A SPECIFIC GRAVITY OF 1.60 TO 1.70 THROUGHOUT (20,000 PSI)



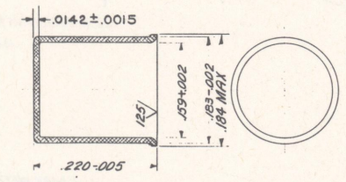
CHARGE, LOWER DETONATOR 73-1-194P

2.69 GRAINS APPROX. (174 MGS.) LEAD AZIDE PRESS AT 10,000 LBS. PER SQ. IN.



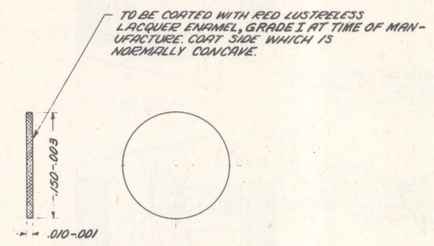
MAGAZINE ASSEMBLY 73-1-194A5

LOWER DETONATOR ASSEMBLY 73-1-194M5



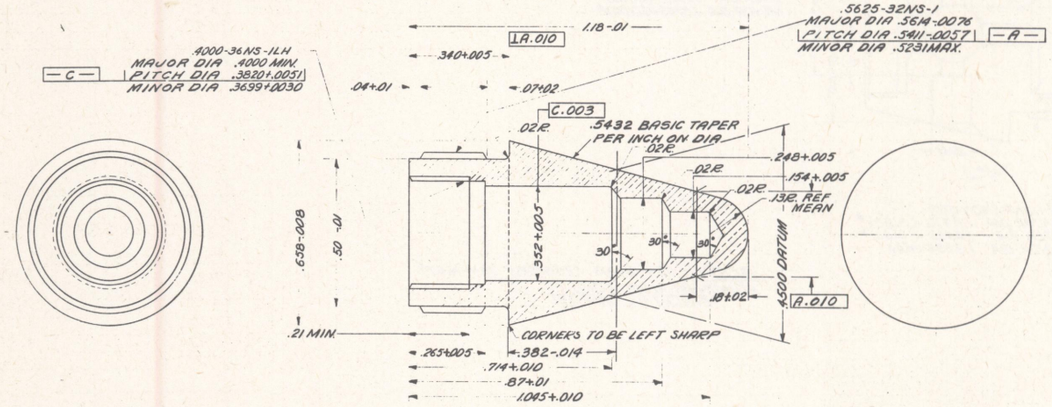
CUP, LOWER DETONATOR 73-1-194N5

ALUMINUM, SHEET, CONDITION A



DISC, LOWER DETONATOR 73-1-194R5

ALUMINUM, SHEET, CONDITION A

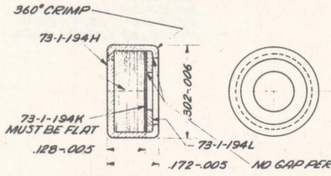


BODY 73-1-194C5

BRASS, COMMERCIAL, ROD, COMPOSITION B, HALF-HARD
FINISH ALL OVER 125

CHARGE, DETONATOR 73-1-194F

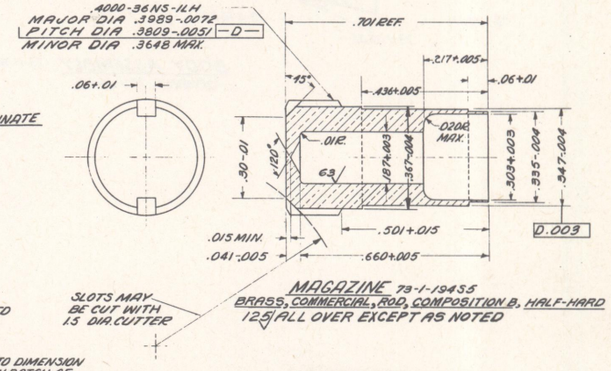
APPROX. 58 GRAINS (3.75 MILLIGRAMS), MERCURY FULMINATE
FOR LOADING DATA SEE NOTES



DETONATOR ASSEMBLY 73-1-194G5

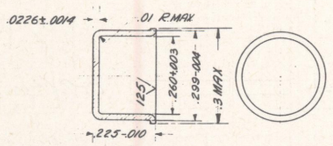
REQUIREMENTS:
1. INSERT DETONATOR CHARGE IN CUP AND CONSOLIDATE TO DIMENSION SPECIFIED. ESTABLISH WEIGHT OF CHARGE FOR EACH NEW BATCH OF EXPLOSIVE BY TRIAL LOADING AT 15,000 PSI.
2. SPRAY SURFACE OF CONSOLIDATED CHARGE WITH A FINE COATING OF MEDIUM, GRADE A, TYPE II, ORANGE SHELLAC VARNISH, AND ALLOW TO DRY AT 120°F TO 130°F FOR ½ HOUR.
3. ASSEMBLE DISC AND WASHER, AND CRIMP ASSEMBLY TO OVERALL HEIGHT AS SPECIFIED.

ADVISORY DATA:
1. REMOVE LOOSE EXCESS DETONATOR CHARGE FROM CUP AFTER CONSOLIDATION, BY INVERTING AND VIBRATING CUP OVER A PAN OF WATER.
2. USE SPRING LOADED INSERTS IN CRIMPING PUNCHES TO HOLD DISC & WASHER FLAT.
3. CLEAN DETONATORS, AFTER CRIMPING, BY RUMBLING IN A PERFORATED CONDUCTIVE RUBBER CUP WITH SOFT COTTON FLANNEL CLOTH.



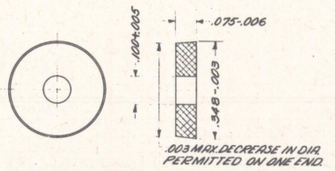
MAGAZINE 73-1-194S5

BRASS, COMMERCIAL, ROD, COMPOSITION B, HALF-HARD
125 ALL OVER EXCEPT AS NOTED



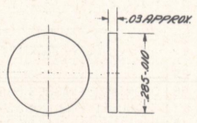
CUP, DETONATOR 73-1-194H5

GILDING METAL
AFTER FINAL DRAW, HEAT-TREAT AT 850°F FOR ONE HOUR. WHERE BURRS ARE REMOVED BY RUMBLING, HEAT-TREAT AFTER RUMBLING OPERATION.



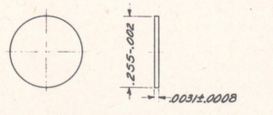
WASHER, IMPACT 73-1-194T5

ALUMINUM ALLOY (RL-24), SHEET, CONDITION T



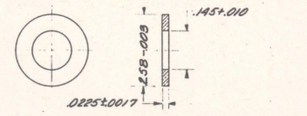
DISC 73-1-194G5

FELT NO. 10
DIAMETER DIMENSION CONTROLS TOOL MANUFACTURE.



DISC, DETONATOR 73-1-194K5

LEAD, GRADE B
DIAMETER DIMENSION CONTROLS TOOL MANUFACTURE



WASHER, DETONATOR 73-1-194L5

COPPER, STRIP, HARD

SCALE, INCHES, 4, 7, 10, 12

SUPERSEDES 73-1-194 WITH CHANGE AUGUST 15, 1945

FUZE, PD, M75 DETAILS

FEBRUARY 15, 1944	CLASS	DIVISION	DRAWING	FILE
REVISIONS	73	1	194	
4 8-15-45				
5 6-12-50				

TOLERANCE ON DIMENSIONS NOT OTHERWISE SPECIFIED
DECIMAL ±
FRACTIONAL ±
ANGULAR ±

D'FTSMAN T.A. | TRACER T.A. | DRDMAND ENGINEER | CHECKER JPT | ARMD ENGINEER

SUBMITTED: Amgallagher, LT COL. ORD. DEPT. U.S.A.

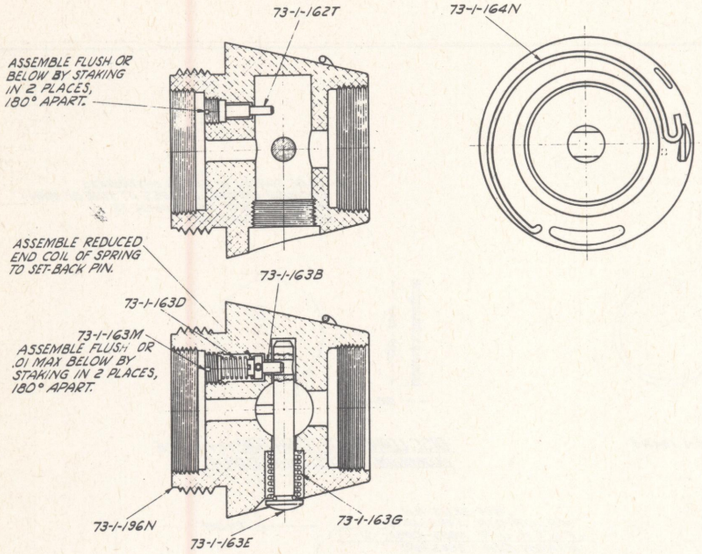
EXAMINED: J. C. Hazlett, ENG ORD. DEPT. U.S.A.

APPROVED BY ORDER OF THE CHIEF OF ORDNANCE: C. S. Reed, COL., ORD. DEPT. U.S.A.

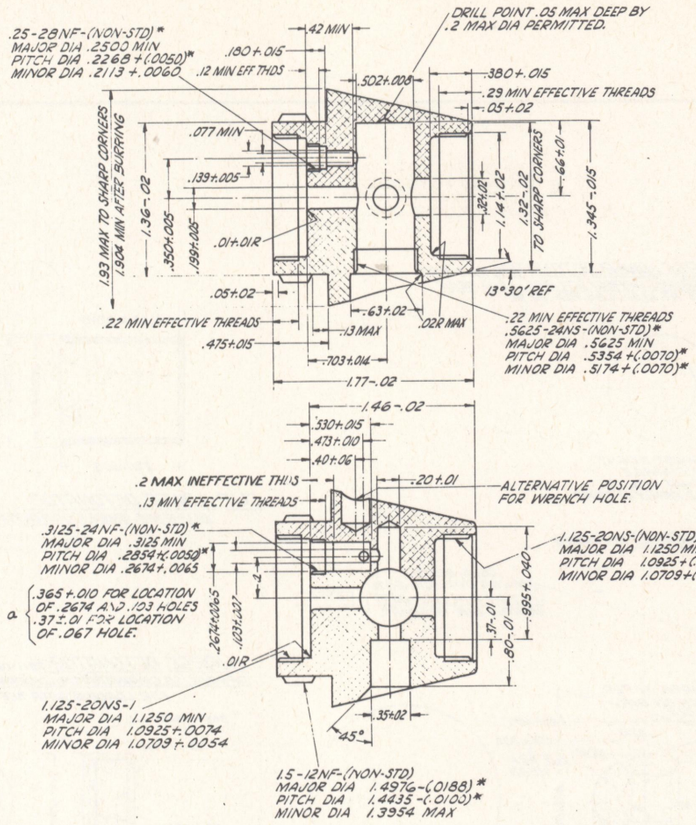
DRG. PERTAINS TO

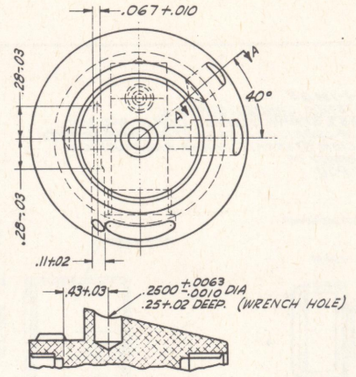
D

ORDNANCE DEPT., U.S.A.



BODY ASSEMBLY 73-1-196M3
(FORMERLY 73-1-164S)





SECTION A-A

BODY 73-1-196N3 (FORMERLY 73-1-164T)
ALUMINUM-ALLOY, COND-T
FINISH ALL OVER 125

SUPERSEDES 73-1-164 IN PART WITH CHANGE, MARCH 24, 1950.

SCALE, INCHES, 2/1

NOTICE:-
THIS DRAWING SHALL NOT BE USED OR REPRODUCED EITHER WHOLLY OR IN PART EXCEPT WHEN AUTHORIZED IN CONNECTION WITH UNITED STATES GOVERNMENT PROCUREMENT.

SYM	DESCRIPTION	DATE	APPROVAL
3		3-2850	

REVISIONS

PHYSICAL PROPERTIES		TOLERANCES ON DECIMALS	ORIGINAL DATE OF DRAWING OCT 4, 1944
TP		ANGLES FRACTIONS	DRAFTSMAN CHECKER
TS		MATERIAL	TRACER CHECKER
EL 2		HEAT TREATMENT	ENGINEER ENGINEER
RA	73-1-161		SUBMITTED
BH	NEXT ASSY USED ON	FINAL PROTECTIVE FINISH	APPROVED BY ORDER OF THE CHIEF OF ORDNANCE
HP	APPLICATION		
	DO NOT APPLY PART NO.		
	DO AS SPECIFIED		

UNLESS OTHERWISE SPECIFIED DIMENSIONS ARE IN INCHES

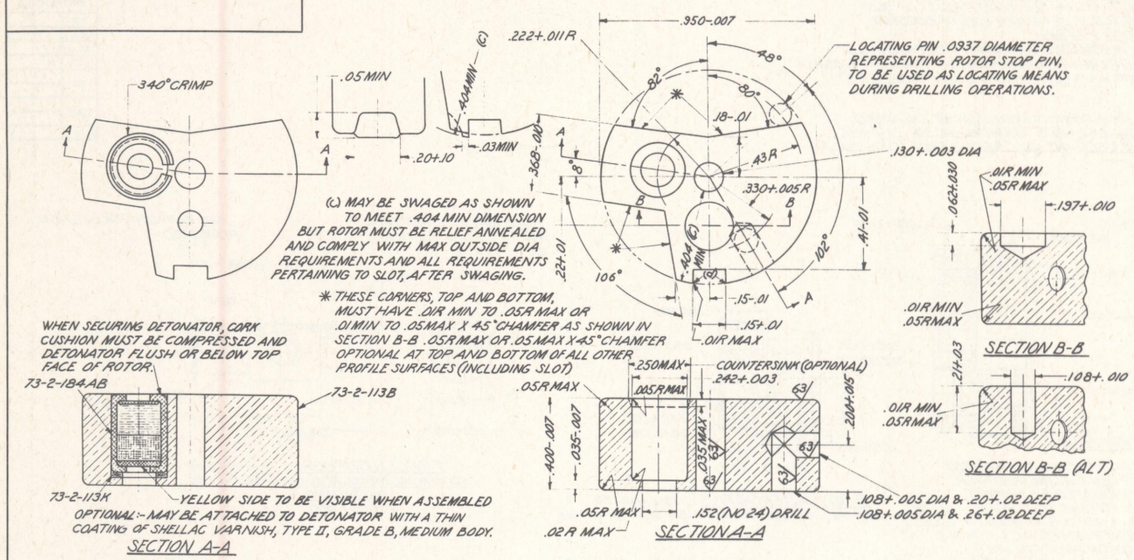
FUZE
PD, M52A1
DETAILS

ORDNANCE DEPT
DEPT OF THE ARMY

SCALE | UNIT WT | DWG SIZE E | 73-1-196 | SHEET OF

HEAT TREATMENT AND FINAL FINISH

PHYSICAL PROPERTIES	
Y.P.	
T.S.	
EL. 2	
RED.	
BR.	
ROCK.	

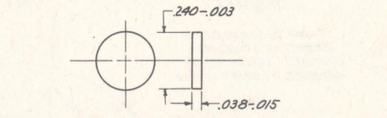


ROTOR ASSEMBLY 73-2-113 A 23

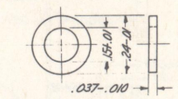
ROTOR 73-2-113 B 23
COMMERCIAL BRASS, SHAPE, COMPOSITION A
FINISH 125 EXCEPT AS NOTED

PHYSICAL PROPERTIES NOT REQUIRED AS A BASIS FOR ACCEPTIBILITY OF MATERIAL FOR THIS PART.

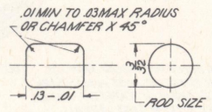
(d)-SLIGHT BURR PERMITTED AT TOP AND BOTTOM CORNERS ONLY



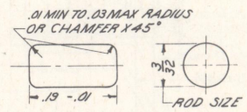
PLUG, ALTERNATIVE BODY 73-2-113 C 22
COMMERCIAL BRASS, STRIP, COMPOSITION C OR E, HARD



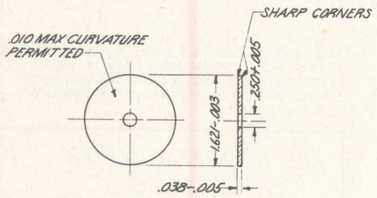
CUSHION, DETONATOR 73-2-113 K 22
COMPRESSED CORK, COMMERCIAL
DIAMETER DIMENSIONS CONTROL TOOL MANUFACTURE.



LOCK, ROTOR LOCK PIN 73-2-113 L 23
COMMERCIAL BRASS, ROD, COMPOSITION B, HALF HARD
FINISH 125



PIN, ROTOR LOCK 73-2-113 M 23
COMMERCIAL BRASS, ROD, COMPOSITION B, HALF HARD
FINISH 125



COVER, ROTOR 73-2-113 P 22
COMMERCIAL BRASS, STRIP COMPOSITION C OR E, HARD
.010 MAX ECCENTRICITY PERMITTED BETWEEN OUTSIDE DIAMETER AND .250+.005 HOLE.

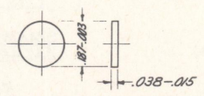


REDUCE DIA OF END COIL ON EACH END.

SPRING, CENTRIFUGAL PIN 73-2-113 Q 22
MUSIC WIRE, COMP A.

REQUIREMENTS
- A - SOLID HEIGHT NOT OVER .07 INCH.
- B - LEFT HAND WIND.
- C - SEASON THOROUGHLY AFTER WINDING.
- D - WITHIN 24 HOURS AFTER PLATING, TREAT TO REMOVE EMBRITTLEMENT.
- E - MUST MEET ARMING LIMITS OF CENTRIFUGAL PIN AS SPECIFIED IN METAL PARTS SPECIFICATION. (OCCASIONAL CHECK WILL BE MADE AFTER COMPRESSION FOR AT LEAST 24 HOURS AT THE ASSEMBLED HEIGHT).

ADVISORY DATA (NOT MANDATORY)
- A - DIAMETER OF WIRE = .01 INCH.
- B - TOTAL NUMBER OF COILS = 6.
- C - NUMBER OF ACTIVE COILS = 5.
- D - ADJUST FREE HEIGHT TO MEET LOAD AT .125 INCH. SUGGESTED TRIAL FREE HEIGHT = .33 INCH.
- E - LOAD AT .125 INCH = 700 GRAINS ± 100 GRAINS.
- F - LOAD APPLIES AFTER SEASONING, PLATING, AND TREATMENT TO REMOVE EMBRITTLEMENT.
- G - SEASON BY HEATING TO 500° F FOR 30 MINUTES.
- H - TO REMOVE EMBRITTLEMENT, HEAT TO 300° F FOR AT LEAST 30 MINUTES AS SOON AFTER PLATING AS PRACTICABLE.



PLUG, BODY 73-2-113 R 22
COMMERCIAL BRASS, STRIP
COMPOSITION C OR E, HARD

REMOVE ALL BURRS

SUPERSEDES 73-2-113 WITHOUT CHANGE 9-21-48

SCALE: 1/1, 4/1, 5/1, 8/1

SEE DRAWING 73-2-154 A FOR PROTECTIVE FINISHES AND ALTERNATIVE MATERIALS.

NOTICE:- THIS DRAWING SHALL NOT BE USED NOR REPRODUCED EITHER WHOLLY OR IN PART EXCEPT WHEN AUTHORIZED IN CONNECTION WITH UNITED STATES GOVERNMENT PROCUREMENT.

BOOSTER, M21A4
DETAILS

JUNE 11, 1932

REVISIONS					
22	8-15-46				
23	9-21-48				

CLASS	DIVISION	DRAWING	FILE
73	2	113	

TOLERANCE ON DIMENSIONS NOT OTHERWISE SPECIFIED
DECIMAL ±
FRACTIONAL ±
ANGULAR ±

D'TSMAN	TRACER		ENGINEER
S.A.	J.M.G.		
CHECKER			ENGINEER
A.C.J.			

DRG. PERTAINS TO
73-2-154

SUBMITTED:- J.R. Benson, ORD EMS, ORD. DEPT. U.S.A.

EXAMINED:- C.R. Dutton, COL., ORD. DEPT., U.S.A.

APPROVED BY ORDER OF THE CHIEF OF ORDNANCE:- J.B. Thomas, COL., ORD. DEPT. U.S.A.

D

ORDNANCE DEPT., U.S.A.

HEAT TREATMENT AND FINAL FINISH

PHYSICAL PROPERTIES	
Y.P.	
T.S.	
EL. 2	
RED.	
BR.	
ROCK.	

THIS SURFACE MAY BE .005 MAX CONCAVE OR CONVEX WITHIN LIMITS SHOWN

1.6-20NS-2LH (NON ST'D)*
MAJOR DIA 1.6000-.0120 *
PITCH DIA 1.5675-.0056
MINOR DIA 1.5387 MAX
*MAJOR DIA 1.6000-.0150 (ON ROLLED THREAD ONLY)

2.-12NS-1
MAJOR DIA 1.9976-.0158
PITCH DIA 1.9435-.0106
MINOR DIA 1.8954 MAX

1.7-14NS-1 (NON ST'D)*
MAJOR DIA 1.7000 MIN
PITCH DIA 1.6536+.0102
MINOR DIA 1.6227+.0100*

.02 R MAX OR .02 X 45° CHAMFER

.02 X 30° CHAMFER

DIAMETER TO BE SAME AS MINOR DIA OF 1.7-14NS-1 (NON ST'D THREAD)

NOTE E

.2 MIN PERFECT THD'S

.06 MIN FREE FROM THREADS. (EXCEPT THAT LAST HALF-TURN OF RUNOUT OF TAPPED THREAD MAY ENTER THIS AREA)

PERFECT THREADS .58 MIN FROM FACE
NOTE F.

.08 MAX IMPERFECT THD'S.

.080 MIN TO .200 MAX.

.36 MAX DIA COUNTERBORE.

SHARP CORNERS

* .45-32NS-1 (NON ST'D)
MAJOR DIA .4500 MIN
PITCH DIA .4297+.0051
* MINOR DIA .4162+.0054

NOTE E
.3-28NS-1 (NON ST'D)*
MAJOR DIA .3000 MIN
PITCH DIA .2768+.0046
MINOR DIA .2613+.0059*

NOTE B:-CONTROL PHYSICAL PROPERTIES OF MATERIAL USED TO COMPLY WITH METAL PARTS SPECIFICATION.

BODY 73-2-114.B 26 (SEE NOTE B)
COMMERCIAL BRASS, ROD, COMPOSITION B, HALF HARD
FINISH 125

ENLARGED CRIMPING GROOVE

SECTION B-B

NOTE:-ALLOWABLE ECCENTRICITY OF SLOT EACH SIDE OF CENTER LINE OF BOOSTER BODY ± .01 INCH.
ALLOWABLE ANGULARITY BETWEEN SLOT CENTERLINE AND CENTERLINE THROUGH CLOSING CUP AND CENTRIFUGAL PIN HOLES, ± 2°.

.189+.005 (OPTIONAL: MAY BE ENLARGED TO .242+.005 PROVIDED PC MK 73-2-113C IS USED IN LIEU OF BODY PLUG 73-2-113R).

NOTE E:-MAX OF .003 MISALIGNMENT FROM BODY CENTER LINE IN EITHER DIRECTION INDICATED BY ARROWS PERMITTED FOR THE FOLLOWING:-.105 & .205 DIA, & .3-28NS-1 CENTER PIN HOLES.
.200 DIA BOOSTER CLOSING CUP HOLE.
.1230 DIA ROTOR PIVOT PIN HOLE.
.242+.003 & .34+.02 DIA HOLES IN ALTERNATIVE BODY.

NOTE F:-PERFECT THREAD FORM WILL BE CHECKED ONLY TO .544 MIN IF THREAD IS FORMED BY TAPPING WITH TAP HAVING AT LEAST ONE PITCH LEAD.

BODY (ALTERNATIVE) 73-2-114A25
FOR ALL OTHER INFORMATION SEE 73-2-114B

HOLE MAY BE CHAMFERED 45° TO .02 MAX DEPTH AT BOTH ENDS.

.020 CUT-OFF PROJECTION PERMITTED.

PIN, CENTRIFUGAL 73-2-114C24
COMMERCIAL BRASS, ROD, COMPOSITION B, HALF HARD
FINISH 125

REDUCE DIAMETER OF END COIL ON EACH END. CLOSED ENDS

REQUIREMENTS
A-SOLID HEIGHT NOT OVER .115 INCH.
B-LEFT HAND WIND.
C-SEASON THOROUGHLY AFTER WINDING
D-WITHIN 24 HOURS AFTER PLATING, TREAT TO REMOVE EMBRITTLEMENT.
E-LOAD AT .117 INCH = 2.0 OZS MAX
F-LOAD AT ASSEMBLED HEIGHT .34 INCH = 8½ OZS MIN. (OCCASIONAL CHECK WILL BE MADE AFTER COMPRESSING FOR AT LEAST 24 HOURS AT THE ASSEMBLED HEIGHT.
G-LOADS APPLY AFTER SEASONING, PLATING, AND TREATMENT TO REMOVE EMBRITTLEMENT.

ADVISORY DATA (NOT MANDATORY)
A-DIAMETER OF WIRE = .014 INCH.
B-TOTAL NUMBER OF COILS = 7.
C-NUMBER OF ACTIVE COILS = 5½.
D-ADJUST FREE HEIGHT TO MEET LOAD REQUIREMENTS. SUGGESTED TRIAL FREE HEIGHT = .63 INCH.
E-SEASON BY HEATING TO 500°F FOR 30 MINUTES
F-TO REMOVE EMBRITTLEMENT, HEAT TO 300°F FOR AT LEAST 30 MINUTES AS SOON AFTER PLATING AS PRACTICABLE.

SPRING, CENTRIFUGAL PIN LOCK PIN 73-2-114D25
WIRE, STEEL, MUSIC, SPRING, COMPOSITION A

STAKING COUNTERBORE ENLARGED VIEW

(c) THIS DIMENSION INCLUDES CUTOFF PROJECTION
(d) EXCLUSIVE OF CUTOFF PROJECTION

PIN, CENTRIFUGAL PIN LOCK 73-2-114E26
COMMERCIAL BRASS, ROD, COMPOSITION B, HALF HARD
FINISH 125

SCREW, LOCK PIN CLOSING 73-2-114F26
COMMERCIAL BRASS, ROD, COMPOSITION B, HALF HARD
FINISH 125

SCREW, LOCK PIN CLOSING (ALTERNATIVE) 73-2-114G23
FOR OTHER DIMENSIONS AND INFORMATION SEE 73-2-114F

SEE DWG 73-2-154A FOR PROTECTIVE FINISHES AND ALTERNATIVE MATERIAL

REMOVE ALL BURRS

SUPERSEDES 73-2-114 WITHOUT CHANGE 9-21-48

SCALE, INCHES: 2/1, 4/1, 5/1

NOTICE: THIS DRAWING SHALL NOT BE USED NOR REPRODUCED EITHER WHOLLY OR IN PART, EXCEPT WHEN AUTHORIZED IN CONNECTION WITH UNITED STATES GOVERNMENT PROCUREMENT.

BOOSTER M21A4. DETAILS

JUNE 11, 1932	CLASS	DIVISION	DRAWING	FILE
REVISIONS	73	2	114	
25 8-15-45				
26 9-21-48				

TOLERANCE ON DIMENSIONS NOT OTHERWISE SPECIFIED
DECIMAL ±
FRACTIONAL ±
ANGULAR ±

D'FTSMAN	TRACER	ENGINEER
J.A.F.	F.C.B.	
CHECKER		ENGINEER
A.C.J.		

DRG. PERTAINS TO
73-2-154

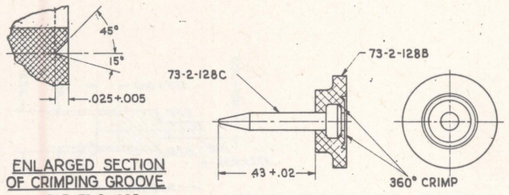
SUBMITTED:- D. R. Belmon, ORD. ENG., ORD. DEPT. U. S. A.

EXAMINED:- C. R. Dutton, COL., ORD. DEPT. U. S. A.

APPROVED BY ORDER OF THE CHIEF OF ORDNANCE:- C. H. Stands, COL., ORD. DEPT. U. S. A.

D

ORDNANCE DEPT. U. S. A.



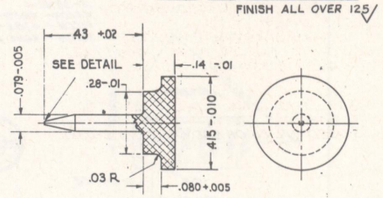
ENLARGED SECTION OF CRIMPING GROOVE FOR 73-2-128B

FIRING PIN ASSEMBLY 73-2-128A14

PIN, FIRING (ALTERNATIVE) 73-2-128W19

STEEL, F51117, A5 COLD FINISHED

FINISH ALL OVER 125

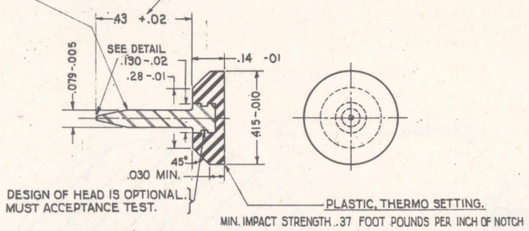


FIRING PIN ASSEMBLY (ALTERNATIVE) 73-2-128S19

ALUMINUM-ALLOY, ROD, HEAT-TREATED AND COLD WORKED

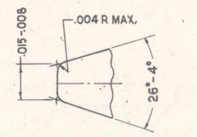
FINISH ALL OVER 125

THIS DIMENSION INCLUDES ALLOWABLE .005 MAX. CONCAVITY OR CONVEXITY.



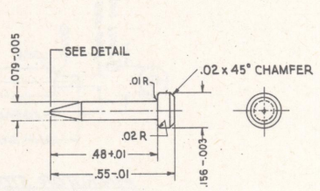
FIRING PIN ASSEMBLY (ALTERNATIVE) 73-2-128U19

NOTE:- MANUFACTURER'S INITIALS OR SYMBOL TO BE ON ANY SUITABLE SURFACE OF PLASTICS.



DETAIL OF PIN POINT

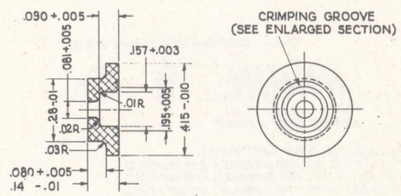
40/1



PIN, FIRING 73-2-128C19

ALUMINUM-ALLOY, ROD, HEAT-TREATED AND COLD WORKED

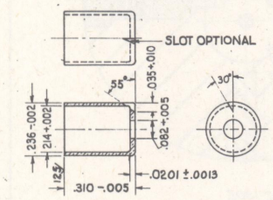
FINISH ALL OVER 125



STRIKER 73-2-128B19

ALUMINUM-ALLOY, ROD, HEAT-TREATED AND COLD WORKED

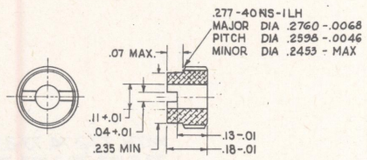
FINISH ALL OVER 125



SUPPORT, FIRING PIN 73-2-128D19

GILDING METAL

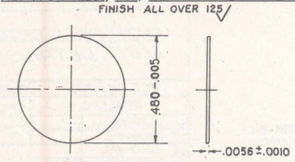
ANNEAL TO COLLAPSE NOT MORE THAN .035 IN. WHEN A LOAD OF 130 LBS. IS APPLIED ON THE TOP. MUST COLLAPSE TO A HEIGHT NOT GREATER THAN .115 IN. WHEN A LOAD OF 160 LBS. IS APPLIED.



SCREW, DETONATOR RETAINING 73-2-128M19

ALUMINUM-ALLOY, ROD, HEAT-TREATED AND COLD WORKED

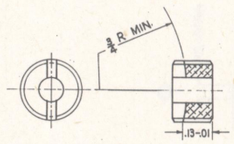
FINISH ALL OVER 125



DISC, CLOSING 73-2-128N19

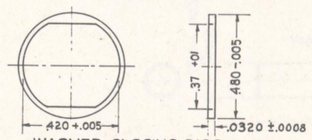
ALUMINUM, SHEET, CONDITION A

DIAMETER DIMENSION CONTROLS TOOL MANUFACTURE



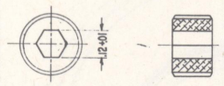
SCREW, DETONATOR RETAINING (ALTERNATIVE SCREWDRIVER SLOT)

FOR OTHER INFORMATION, SEE 73-2-128M



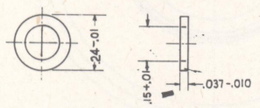
WASHER, CLOSING DISC 73-2-128P19

COMMERCIAL BRASS, STRIP, COMPOSITION-C, HARD



SCREW, DETONATOR RETAINING (ALTERNATIVE) 73-2-128T14

FOR OTHER INFORMATION, SEE 73-2-128M



CUSHION, DETONATOR 73-2-128L19

CORK, COMPOSITION, SHEET, CLASS A

DIMENSIONS, EXCEPT THICKNESS, CONTROL TOOL MANUFACTURE.

MAY BE ATTACHED TO DETONATOR WITH A THIN FILM OF SHELLAC VARNISH TYPE II, GRADE B, MEDIUM BEFORE ASSEMBLY.

SCALE, INCHES, 4/1

FOR ALTERNATIVE MATERIALS AND PROTECTIVE FINISHES SEE LIST OF PARTS.

DETAILS USED WITH THE FOLLOWING FUZES: M51A5, M54, M55A8, M57 AND M81A1.

SUPERSEDES 73-2-128 WITH CHANGE JULY 7, 1945

FUZE, POINT DETONATING M48A3 ET AL. DETAILS

JUNE 10, 1935	CLASS	DIVISION	DRAWING	FILE
	73	2	128	

REVISIONS

16	7-7-45	
17	8-15-45	
18	10-18-49	
19	7-22-50	

TOLERANCE ON DIMENSIONS NOT OTHERWISE SPECIFIED
DECIMAL ±
FRACTIONAL ±
ANGULAR ±

D'FTSMAN W.H.A. | TRACER W.H.A. | ENGINEER

CHECKER | HEAD ENGINEER

DRG. PERTAINS TO

73-2-138
73-2-140
73-2-146
73-3-154
73-3-155

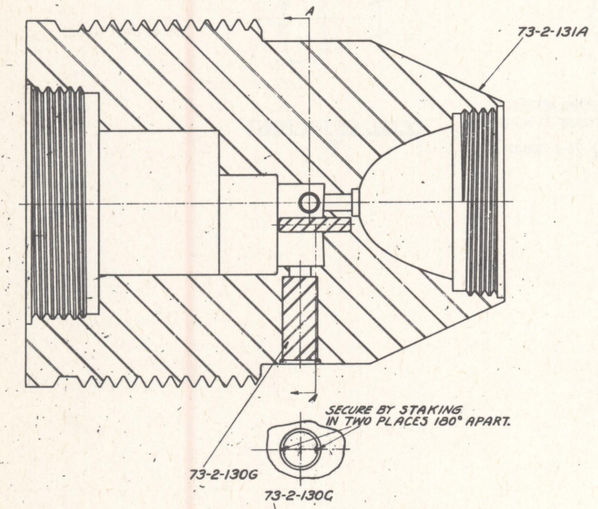
SUBMITTED:
LT. COL., ORD. DEPT. U.S.A.

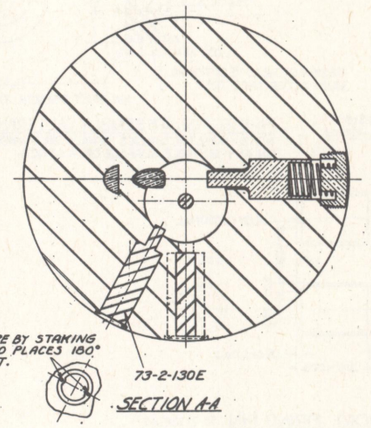
EXAMINED:
LT. COL., ORD. DEPT. U.S.A.

APPROVED BY ORDER OF THE CHIEF OF ORDNANCE:
COL., ORD. DEPT. U.S.A.

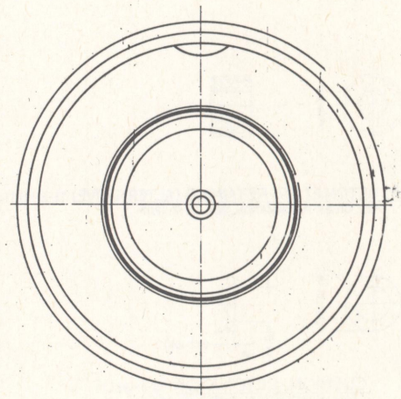
D

ORDNANCE DEPT., U.S.A.





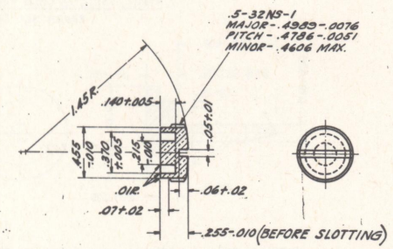
SECTION A-A



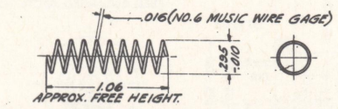
BODY ASSEMBLY 73-2-130A5
FOR FUZE, B.D, MK.X, ONLY

FOR BODY ASSEMBLY, FUZE, B.D. M.60, SEE DRAWING 73-2-166

REMOVE ALL BURRS.

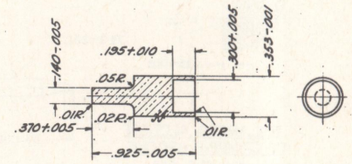


SCREW, CENTRIFUGAL PIN 73-2-130B5
COMMERCIAL BRASS, ROD, COMPOSITION "B", HALF HARD.
FINISH $\frac{32}{}$

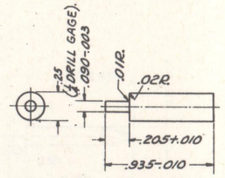


9 COILS ± ½ COIL, WIND LEFT HAND.
LOAD AT .42 = 5. OZ., 150. GRAINS ± 200. GRAINS.
LOAD AT .20 = 7. OZ., 150. GRAINS ± 200. GRAINS.
THESE LOADS APPLY TO SPRING AFTER IT HAS BEEN THOROUGHLY SEASONED AND PLATED.

SPRING, CENTRIFUGAL PIN 73-2-130D5
MUSIC WIRE, COMP. A
CADMIUM PLATE AFTER WINDING.
TO MEET ARMING LIMITS GIVEN ON DRG. 73-2-74. FOR MK X OR DRG. 73-2-165 FOR M60.

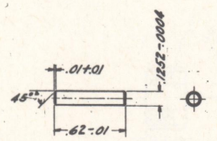


PIN, CENTRIFUGAL 73-2-130C5
COMMERCIAL BRASS, ROD, COMPOSITION "B", HALF HARD.
FINISH $\frac{32}{}$

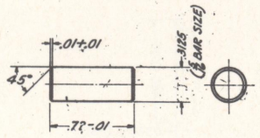


PIN, ROTOR STOP 73-2-130E4
CARBON STEEL DRILL ROD
FINISH $\frac{32}{}$
CADMIUM PLATE.

REMOVE ALL BURRS.



PIN, ROTOR PIVOT 73-2-130F1
CARBON STEEL DRILL ROD
FINISH $\frac{32}{}$



PLUG, BODY 73-2-130G5
STEEL, WD 1115, WD1120 OR WQ 1314
FINISH $\frac{32}{}$
CADMIUM PLATE.

REMOVE ALL BURRS.

NOTICE: THIS DRAWING SHALL NOT BE USED NOR REPRODUCED EITHER WHOLLY OR IN PART EXCEPT AS AUTHORIZED IN CONNECTION WITH UNITED STATES GOVERNMENT PROCUREMENT.

PHYSICAL PROPERTIES	
Y.P.	
T.S.	
EL-2	
RED.	
HT. T.	
BR.	
SCL.	
C.C.	

WITH 73-2-74, 73-2-74A, 73-2-74B, 73-2-131, 73-2-132, 73-2-133, 73-2-134, 73-2-135 AND 73-2-136, SUPERSEDES OLD TRACING 73-2-74 UNDER DATE OF OCT. 28, 1935.

FUZE, BASE DETONATING, MK.10 & M60. DETAILS.

OCT. 28, 1935.	CLASS	DIVISION	DRAWING	FILE
	73	2	130	

REVISIONS	
1	1-29-40
2	4-29-40
3	12-10-41
4	1-10-42
5	8-15-45

SYMBOL

DFTSMAN	TRACER	CHIEF DFTSMAN
L.F.T.	A.E.R.	
CHECKER	CHECKER	CHIEF DFTSMAN
W.W.F.	V.L.M.	

SUBMITTED — Lt. Col., ORD. DEPT. U.S.A.

EXAMINED — Col., ORD DEPT. U.S.A.

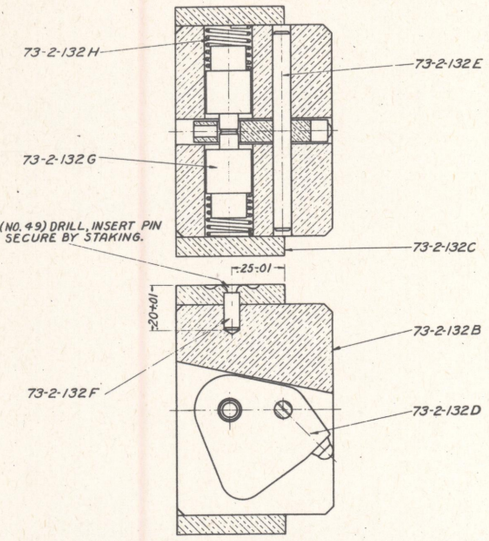
APPROVED BY ORDER, CHIEF OF ORDNANCE — Lt. Col., ORD DEPT. U.S.A.

DRG. PERTAINS TO
73-2-74
73-2-165

SCALE, INCHES $\frac{3}{}$

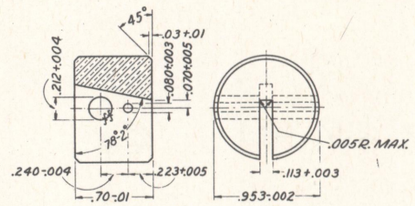
D

PICATINNY ARSENAL, U.S.A.

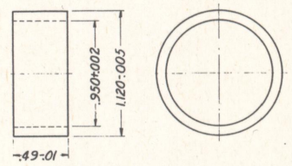


CENTRIFUGAL PLUNGER TYPE "F" ASSEMBLY 73-2-132A4
FIRING PIN MUST FULLY ARM WHEN ROTATED AT 1450 REVOLUTIONS PER MINUTE AND NOT ARM WHEN ROTATED AT 1150 REVOLUTIONS PER MINUTE.

REMOVE ALL BURRS

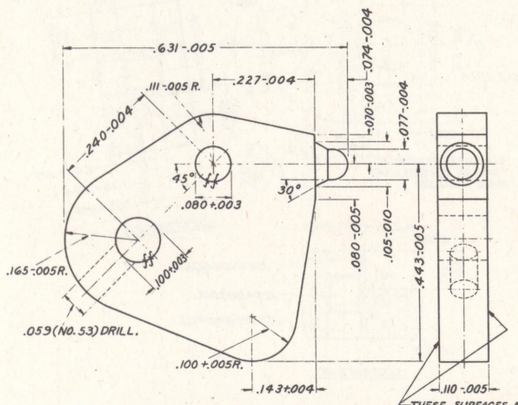


BODY, PLUNGER 73-2-132B4
COMMERCIAL BRASS, ROD, COMPOSITION "B", HALF HARD.
FINISH "f"



HOUSING 73-2-132C4
COMMERCIAL BRASS, ROD, COMPOSITION "B", HALF HARD.
FINISH "f"

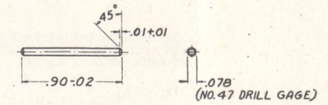
ALTERNATIVE MATERIAL:- BRASS TUBING, SEAMLESS, GRADE 3.



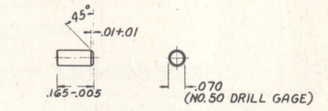
THESE SURFACES MUST BE FLAT AND PARALLEL, ROUNDED CORNER ON ONE EDGE RESULTING FROM BLANKING PERMITTED.

PIN, FIRING 73-2-132D4
COMMERCIAL BRASS, STRIP, COMPOSITION "C", HARD.
FINISH "f"

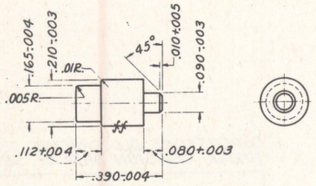
REMOVE ALL BURRS



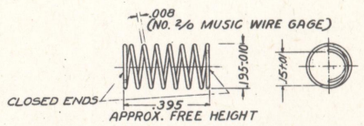
PIN 73-2-132E1
CARBON STEEL DRILL ROD
FINISH "f"
CADMIUM PLATE.



PIN, HOUSING 73-2-132F1
COMMERCIAL BRASS, ROD, COMPOSITION "B", HALF HARD.
FINISH "f"



PIN, CENTRIFUGAL, PLUNGER 73-2-132G4
COMMERCIAL BRASS, ROD, COMPOSITION "B", HALF HARD.
FINISH "f"
CADMIUM PLATE



8¼ COILS (6¼ ACTIVE COILS), WIND RIGHT OR LEFT HAND.
LOAD AT .185 = 195 GRAINS - 40 GRAINS.
LOAD AT .125 = 250 GRAINS - 50 GRAINS.
THESE LOADS APPLY TO SPRING AFTER IT HAS BEEN THOROUGHLY SEASONED AND PLATED.
TO MEET ARMING LIMITS GIVEN ON ASSEMBLY 73-2-132A

SPRING, PIN, CENTRIFUGAL, PLUNGER 73-2-132H4
MUSIC WIRE, COMP. A
TIN PLATE AFTER WINDING.

REMOVE ALL BURRS

REMOVE ALL BURRS.

WITH 73-2-74, 73-2-74A, 73-2-74B, 73-2-130, 73-2-131, 73-2-133, 73-2-134, 73-2-135 AND 73-2-136, SUPERSEDES OLD TRACING 73-2-74 UNDER DATE OF OCT. 28, 1935.

FUZE, BASE DETONATING, MK.1' MK.10 & M60 DETAILS.

OCT. 28, 1935.

REVISIONS	
1	1-29-40
2	4-21-41
3	2-28-42
4	8-15-45

DRG. PERTAINS TO

73-2-74
73-2-165
73-2-62

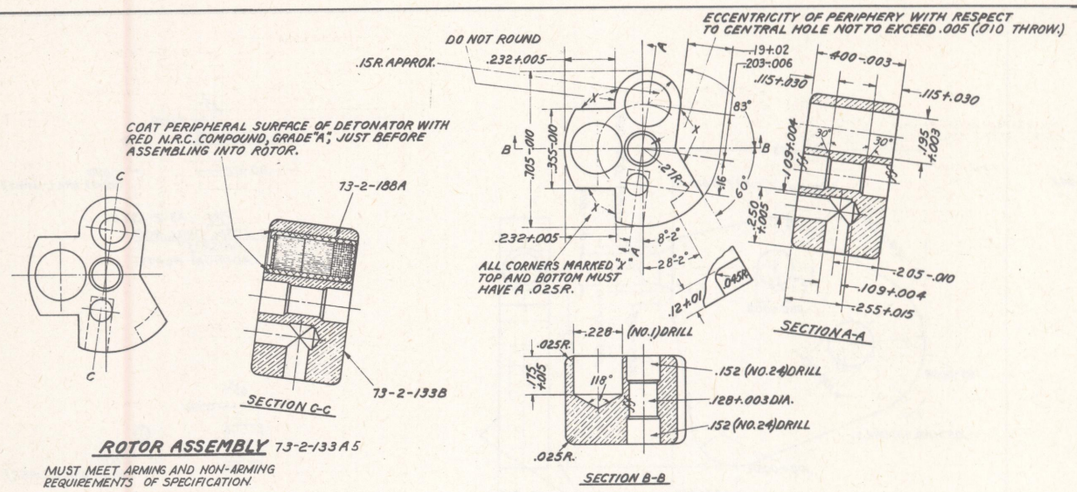
CLASS	DIVISION	DRAWING	FILE
73	2	132	

D'FTSMAN	TRACER	ENG. IN CHG.
R.G.	R.A.S.	
CHECKER	CHECKER	CHIEF D'FTSMAN
V.L.M.	WMZ	M.T.

SUBMITTED:-
LT. COL., ORD. DEPT. U.S.A.
EXAMINED:-
COL., ORD. DEPT. U.S.A.
APPROVED BY ORDER, CHIEF OF ORDNANCE.
LT. COL., ORD. DEPT. U.S.A.

PICATINNY ARSENAL, U.S.A.

SCALE, INCHES 2/1, 4/1, 8/1



ROTOR ASSEMBLY 73-2-133 A5

MUST MEET ARMING AND NON-ARMING REQUIREMENTS OF SPECIFICATION

ROTOR 73-2-133 B5

NAVAL BRASS, TYPE I, HALF HARD
FINISH "F"

REMOVE ALL BURRS

SCALE, INCHES 4/

SUPERSEDES OLD TRACING 73-2-133
UNDER REVISION DATE OF SEPT. 28, 1943.

FUZE, BASE DETONATING, MK10 & M60. DETAILS.

OCT. 28, 1935

REVISIONS	
2	4-21-41
3	10-7-41
4	9-28-43
5	8-15-45

DRG. PERTAINS TO
73-2-74
73-2-165

CLASS	DIVISION	DRAWING	FILE
73	2	133	

TOLERANCE ON DIMENSIONS NOT OTHERWISE SPECIFIED
DECIMAL ±
FRACTIONAL ±
ANGULAR ±

D'FTSMAN J.R.T. | TRACER J.R.T. | ENGINEER
CHECKER M.J.L. | O.C. | SENIOR ENGINEER

SUBMITTED: Sam Gallagher, MAJOR ORD. DEPT. U.S.A.
EXAMINED: C.H. Hofstetter, COL. ORD. DEPT. U.S.A.
APPROVED BY ORDER OF THE CHIEF OF ORDNANCE: J.M. Whiting, COL. ORD. DEPT. U.S.A.

D

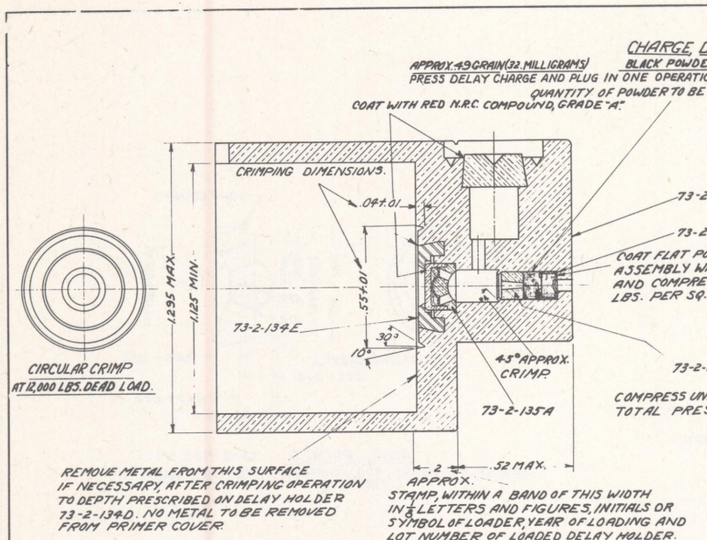
ORDNANCE DEPT. U.S.A.

CHARGE DELAY 73-2-134-B4

APPROX. 49 GRAIN (32 MILLIGRAMS) BLACK POWDER, GRADE "A-5" (35-100 MESH) UNGLAZED

PRESS DELAY CHARGE AND PLUG IN ONE OPERATION AT 1500 LB. LOAD.

QUANTITY OF POWDER TO BE ADJUSTED TO GIVE REQUIRED DELAY.



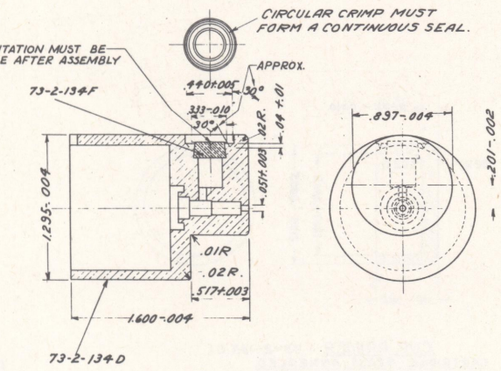
STAMP, WITHIN A BAND OF THIS WIDTH IN ⅛ LETTERS AND FIGURES, INITIALS OR SYMBOL OF LOADER, YEAR OF LOADING AND LOT NUMBER OF LOADED DELAY HOLDER.

DELAY HOLDER ASSEMBLY (LOADING) 73-2-134-A4

REMOVE ALL BURRS

NOTE:
WHEN ASSEMBLING PRIMERS TO DELAY HOLDERS, USE SELECTED PRIMER COVERS, TO CONTROL INTERFERENCE BETWEEN .001 AND .005, AS FOLLOW:-

PRIMER ASSEMBLED HEIGHT	PRIMER COVER DIMENSION "A"
.1505 TO .1514	.0945 TO .0954
.1515 TO .1524	.0955 TO .0964
.1525 TO .1534	.0965 TO .0974
.1535 TO .1544	.0975 TO .0984
.1545 TO .1554	.0985 TO .0994

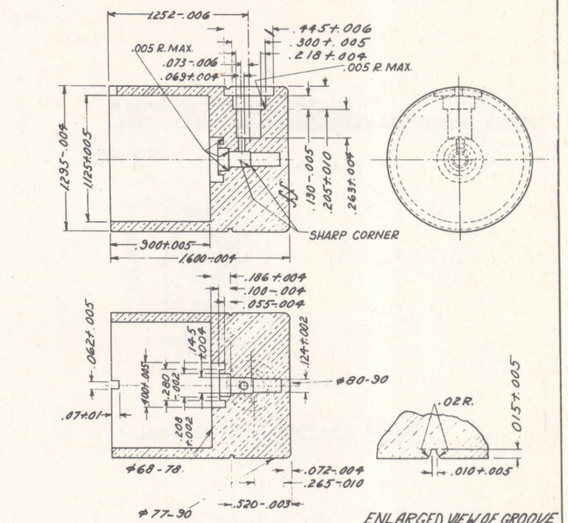


DELAY HOLDER ASSEMBLY 73-2-134-C4

FINISH "X"

AFTER SEALING PLUG HAS BEEN CRIMPED IN PLACE AND DELAY HOLDER FINISH MACHINED, HOLD AT A TEMPERATURE OF 325° TO 375°F FOR APPROX. 45 MINUTES.

REMOVE ALL BURRS



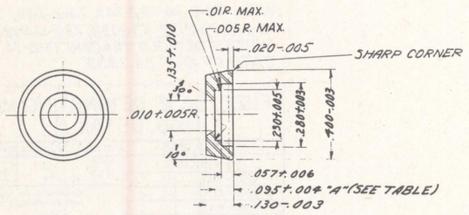
HOLDER, DELAY 73-2-134-D4

NAVAL BRASS, TYPE I, HALF HARD (TIN CONTENT .75% TO 1.25%)

FINISH "X" MATERIAL NOT TO BE EXTRUDED.

= ROCKWELL "B" HARDNESS (100 KG. MAJOR LOAD, 1/16 INCH BALL) OF BLANK AT POINTS INDICATED.

ENLARGED VIEW OF GROOVE



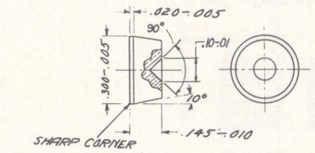
COVER, PRIMER 73-2-134-E4

CHROMIUM MOLYBDENUM STEEL, WD#4130

FINISH "X"

ALTERNATIVE MATERIAL: STEEL WD#4140.
QUENCHED AND DRAWN.
THOROUGHLY CLEAN FOR USE IN AUTOMATIC SCREW MACHINE.
CADMIUM PLATE.

PHYSICAL PROPERTIES	
Y.P.	105,000 MIN.
T.S.	120,000 MIN.
EL-2	13% MIN.
RED.	45% MIN.
BR.	285 MAX.



PLUG, DELAY HOLDER 73-2-134-F4

NAVAL BRASS, TYPE I, HALF HARD.

FINISH "X"

REMOVE ALL BURRS

WITH 73-2-74, 73-2-74-A, 73-2-74-B, 73-2-130, 73-2-131, 73-2-132, 73-2-133, 73-2-135 AND 73-2-136, SUPERSEDES OLD TRACING 73-2-74 UNDER DATE OF OCT. 28, 1935

FUZE, BASE DETONATING, MK.10 & MG0. DETAILS

OCT. 28, 1935

REVISIONS	
1	4-1-36
2	4-21-41
3	1-10-42
4	8-15-45

DRG. PERTAINS TO
73-2-74
73-2-163

CLASS	DIVISION	DRAWING	FILE
73	2	134	

TOLERANCE ON DIMENSIONS NOT OTHERWISE SPECIFIED
DECIMAL ±
FRACTIONAL ±
ANGULAR ±

D'TSMAN R.W.S. | TRACED J.P.O. | ENGINEER
CHECKER | ENGINEER M.T.

SUBMITTED: J. K. Clements, LT. COL., ORD. DEPT. U.S.A.

EXAMINED: O. T. Ramsey, COL., ORD. DEPT. U.S.A.

APPROVED BY ORDER OF THE CHIEF OF ORDNANCE: John B. Booton, LT. COL., ORD. DEPT. U.S.A.

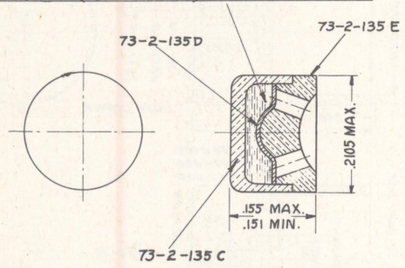
SCALE, INCHES 2/1 4/1

D

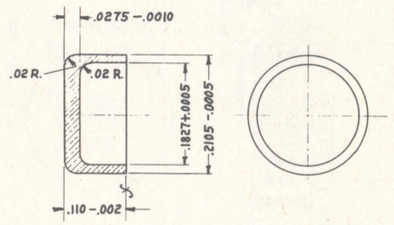
ORDNANCE DEPT., U.S.A.

CHARGE, PRIMER 73-2-135 B

APPROX. 45 GRAIN (29. MILLIGRAMS) NO. 70 PRIMER MIXTURE.



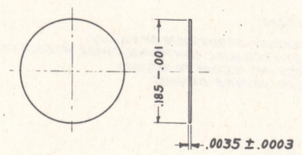
PRIMER ASSEMBLY 73-2-135 A1



CUP, PRIMER 73-2-135 C1

CARTRIDGE BRASS, ANNEALED.

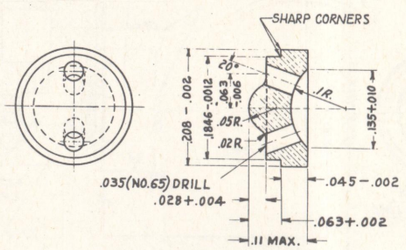
ANNEAL AT 450°F. FOR 2 HOURS.



DISC, PRIMER 73-2-135 D1

FOILING PAPER.

DIAMETER DIMENSION CONTROLS TOOL MANUFACTURE.



ANVIL, PRIMER 73-2-135 E3

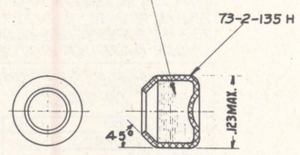
COMMERCIAL BRASS, ROD, COMPOSITION "B", HALF HARD.

FINISH "S"

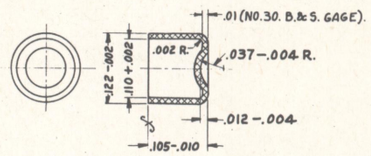
CHARGE, RELAY 73-2-135 G3

.49-.03 GRAIN (34.-4 MILLIGRAMS) LEAD AZIDE.

PRESS AT 25,000 LBS. PER SQ. IN.

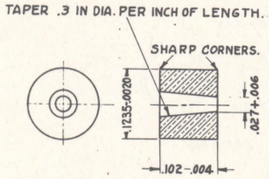


RELAY ASSEMBLY 73-2-135 F1



CUP, RELAY 73-2-135 H1

ALUMINUM, TYPE 2, CLASS "A"



PLUG, DELAY PELLET 73-2-135 K3

NAVAL BRASS, TYPE I, SOFT

HARDNESS: ROCKWELL SUPERFICIAL 15-T 80 MAX.

FINISH "f"

WITH 73-2-74, 73-2-74A, 73-2-74B, 73-2-130, 73-2-131, 73-2-132, 73-2-133, 73-2-134 AND 73-2-136 SUPERSEDES OLD TRACING 73-2-74 UNDER DATE OF OCT. 28, 1935.

REMOVE ALL BURRS.

SCALE, INCHES 10/1

FUZE, BASE DETONATING, MK. 10 & M60. DETAILS

OCT. 28, 1935	CLASS	DIVISION	DRAWING	FILE
REVISIONS	73	2	135	

1	1-29-40	
2	4-21-41	
3	8-15-45	

TOLERANCE ON DIMENSIONS NOT OTHERWISE SPECIFIED
DECIMAL ±
FRACTIONAL ±
ANGULAR ±

DRG. PERTAINS TO
73-2-74
73-2-165

DESIGNED	TRACED	ENGINEER
MMG	Sgt. C. Gallo	MT
CHECKED	V.E.M.	ENGINEER
MMG	V.E.M.	M.T

SUBMITTED: J. K. Dorst, LT. COL. ORD. DEPT. U.S.A.

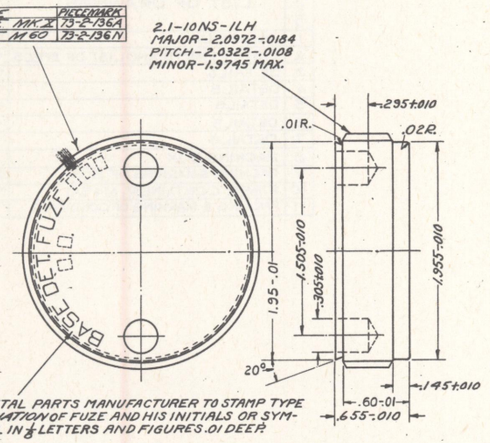
EXAMINED: C. T. Ramsey, COL. ORD. DEPT. U.S.A.

APPROVED BY ORDER OF THE CHIEF OF ORDNANCE: John G. Booth, LT. COL. ORD. DEPT. U.S.A.

D

ORDNANCE DEPT. U.S.A.

FUZE	PIECEMARK
B.D. FUZE MK X	73-2-136A
B.D. FUZE M60	73-2-136N



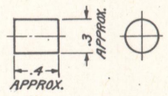
PLUG, BODY CLOSING 73-2-136A4

CHROMIUM MOLYBDENUM STEEL, NDX4130, HOT ROLLED, ROUGH TURNED.

ALTERNATIVE MATERIAL:- STEEL, WD 4140.
CADMIUM PLATE. FINISH .3".

MINIMUM PHYSICAL PROPERTIES:- Y.P. 105,000, T.S. 120,000, EL-2. 13%, RED. 45%, BR. 285 MAX.

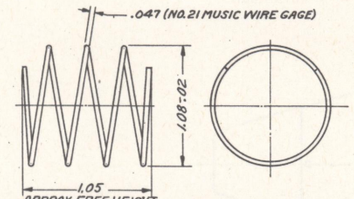
ALTERNATIVE PLATINGS:- ZINC PLUS CRONAK OR ANOZINC TREATMENT.



PLUG, WRENCH HOLE FILLING 73-2-136B
LEAD, COMMERCIAL

PLUG, BODY CLOSING, 73-2-136 N3
STEEL, WD 1050.
FINISH .3".
CADMIUM PLATE.
MINIMUM PHYSICAL PROPERTIES:
Y.P. 80,000
T.S. 105,000
EL-2. 20%
RED. 40%

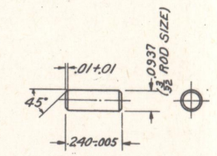
REMOVE ALL BURRS



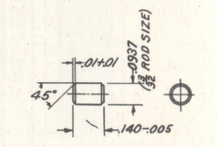
APPROX. FREE HEIGHT
3 3/4 - 1/4 COILS, WOUND LEFT OR RIGHT HAND.
1/4 COIL WOUND WITH 20 PITCH ON EACH END.
LOAD AT .42 = 28-8 OUNCES.
LOAD AT .24 = 37-10 OUNCES.
THESE LOADS APPLY TO SPRING AFTER IT HAS BEEN THOROUGHLY SEASONED AND PLATED.
GRIND ENDS FLAT TO BRING SOLID HEIGHT TO .2 MAX.

SPRING, PLUNGER 73-2-136C4
MUSIC WIRE, COMM. A
CADMIUM PLATE AFTER WINDING.

REMOVE ALL BURRS

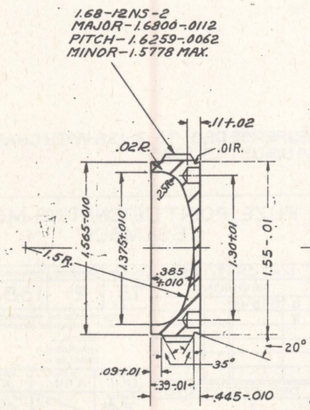


PIN, ROTOR LOCK (LONG) 73-2-136D4
COMMERCIAL BRASS, ROD, COMPOSITION "B"; HALF HARD.
FINISH .3"

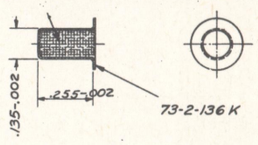


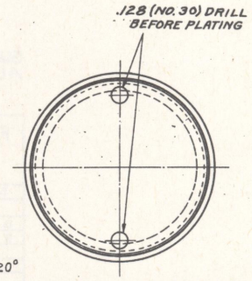
PIN, ROTOR LOCK (SHORT) 73-2-136E4
COMMERCIAL BRASS, ROD, COMPOSITION "B"; HALF HARD.
FINISH .3"

PHYSICAL PROPERTIES	
Y.P.	
T.S.	
EL-2	
RED.	
HT. T.	
BR.	
SCL.	
C.C.	

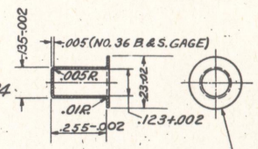


CHARGE, BOOSTER CLOSING CUP 73-2-136H4
APPROX. 108 GRAINS (70. MILLIGRAMS) TETRYL.
MAY CONTAIN NOT MORE THAN 2% NATURAL GRAPHITE, GRADE "B".
PRESS AT 10,000 LBS. PER SQ. IN. IN TWO APPROX. EQUAL INCREMENTS.





BOOSTER CLOSING CUP ASSEMBLY 73-2-136G4



FLANGE MAY BE OUT OF ROUND WITHIN THE TOLERANCE ALLOWED.

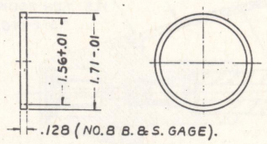
SCREW, BOOSTER CLOSING 73-2-136F4
STEEL, WD 1050.
CADMIUM PLATE. FINISH .3"
MINIMUM PHYSICAL PROPERTIES
Y.P. 80,000 EL-2. 20%
T.S. 105,000 RED. 40%
FOR USE WITH FUZE, B.D., M60 ONLY

SCREW, BOOSTER CLOSING 73-2-136F4
CHROMIUM MOLYBDENUM STEEL, WD 4130, HOT ROLLED, ROUGH TURNED.
ALTERNATIVE MATERIAL:- STEEL, WD 4140.
CADMIUM PLATE. FINISH .3"
MINIMUM PHYSICAL PROPERTIES:- Y.P. 105,000, T.S. 120,000, EL-2. 13%, RED. 45%, BR. 285 MAX.
FOR USE WITH FUZE, B.D., MK.10 ONLY

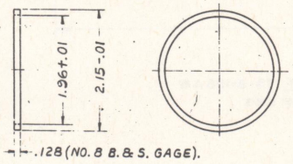
ALTERNATIVE PLATINGS:- ZINC PLUS CRONAK OR ANOZINC TREATMENT. COAT ALL SURFACES IN CONTACT WITH EXPLOSIVES WITH ACID-PROOF BLACK PAINT, TYPE I, AFTER PLATING.

CUP, BOOSTER CLOSING 73-2-136K4
GILDING METAL.

REMOVE ALL BURRS



RING, CAULKING, SCREW 73-2-136L4
ALUMINUM, TYPE I, CLASS "A".
ALTERNATIVE MATERIAL:- SEAMLESS ALUMINUM TUBING, CLASS "A".
ANNEAL AT 1000°F FOR 1 HOUR, COOL IN FURNACE.
ALTERNATIVE MATERIAL:- ALUMINUM, ROD, CONDITION T, ANNEAL AFTER WELDING.



RING, CAULKING, PLUG 73-2-136M4
ALUMINUM, TYPE I, CLASS "A".
ALTERNATIVE MATERIAL:- SEAMLESS ALUMINUM TUBING, CLASS "A".
ANNEAL AT 1000°F FOR 1 HOUR, COOL IN FURNACE.
ALTERNATIVE MATERIAL:- ALUMINUM, ROD, CONDITION T, ANNEAL AFTER WELDING.

REMOVE ALL BURRS

THIS DRAWING SHALL NOT BE USED NOR REPRODUCED EITHER WHOLLY OR IN PART EXCEPT WHEN AUTHORIZED IN CONNECTION WITH UNITED STATES GOVERNMENT PROCUREMENT.

WITH 73-2-74, 73-2-74A, 73-2-74B, 73-2-130 73-2-131, 73-2-132, 73-2-133, 73-2-134 AND 73-2-135, SUPERSEDES OLD TRACING, 73-2-74 UNDER DATE OF OCT. 28, 1935.

FUZE, BASE DETONATING, MK.10-2 M60. DETAILS.

OCT. 28, 1935.	CLASS	DIVISION	DRAWING NO.
REVISIONS	73	2	136+
1 5-1-36	SYMBOL		
2 1-29-40			
3 4-21-41			
4 8-15-45			

DRAFTSMAN	TRACED	ENGINEER
A.E.R.	J.C.B.	
CHECKER	CHECKED	CHIEF D.
	V.L.M.	M.T.

SUBMITTED
LT. COL.

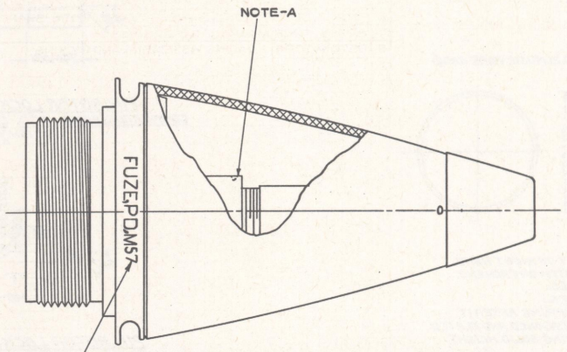
DRG. PERTAINS TO
73-2-74
73-2-165

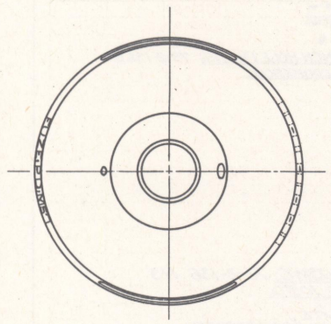
APPROVED BY ORDER, CHIEF OF ORDNANCE
LT. COL.

SCALE, INCHES, 1, 2, 3, 4

PICATINNY ARSENAL, U.S.A.

LINE NO.	LIST OF DRAWINGS	DRAWING NUMBER
1	ASSEMBLY	73-2-138
2	LIST OF PARTS AND LIST OF SPECS.	73-2-138A
3	DETAILS	73-2-140
4	DETAILS	73-2-135
5	DETAILS	73-2-128
6	DETAILS	73-2-200
7	DETAILS	73-2-268
8	PACKING BOX	76-1-522B
9	PACKING & MARKING OF BOX	20-4-190
10	FIBER CONTAINER, M47A1	76-1-603
11	PACKING & MARKING OF CONTAINER	75-14-218





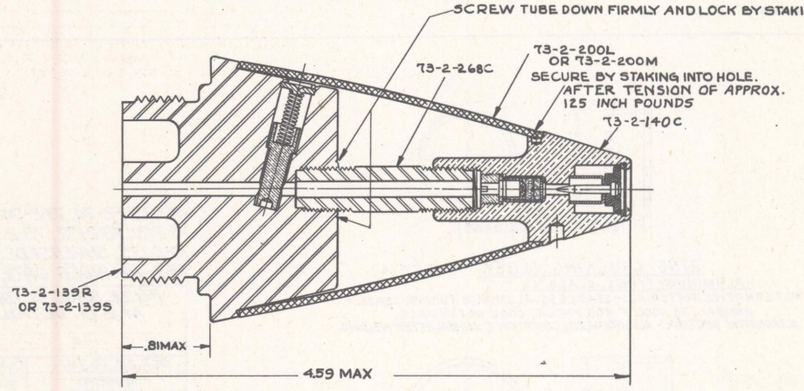
LOADER TO STAMP WITH $\frac{1}{8}$ LETTERS AND FIGURES $\frac{1}{64}$ DEEP, FUZE, PD, M57 ON ONE SIDE. DIRECTLY OPPOSITE STAMP LOT NUMBER AND DATE (MONTH AND YEAR) LOADED. STAMPING, TO BE CENTERED APPROXIMATELY 90° FROM WRENCH SLOTS.

SAMPLE STAMPING: [XX]-[X]-[XX] [XX]-[XX]

LOT NUMBER — MONTH AND YEAR LOADED

AFTER STAMPING COAT WITH CLEAR LACQUER.

SCREW TUBE DOWN FIRMLY AND LOCK BY STAKING. NOTE-A



ASSEMBLY 73-2-138A8

WEIGHT= 1.41 LBS

NOTE-A
ALTERNATIVE: STAKE BY FORCING A CONICAL SHAPED TOOL AT RIGHT ANGLES TO TUBE INTO OPPOSITE SIDES OF BODY

SUPERSEDES 73-2-138 WITH CHANGE AUGUST 15, 1945

FUZE, POINT DETONATING M57
ASSEMBLY

MARCH 17, 1936	CLASS	DIVISION	DRAWING	FILE
REVISIONS	73	2	138	
8 8-15-45				
9				

TOLERANCE ON DIMENSIONS NOT OTHERWISE SPECIFIED
DECIMAL ±
FRACTIONAL ±
ANGULAR ±

D'FTSMAN	TRACER	ORD. ENGINEER
A.F.H.	A.F.H.	
CHECKER		I.E.A.U. ENGINEER

DRG. PERTAINS TO

SUBMITTED:
Amigallagh
LT. COL. ORD. DEPT. U.S.A.

EXAMINED:
L. B. Shannon
LT.-COL. ORD. DEPT. U.S.A.

APPROVED BY ORDER OF THE CHIEF OF ORDNANCE:
A. Adelman
ORD. DEPT. U.S.A.

D

ORDNANCE DEPT., U.S.A.

OBSOLESCENT

LIST OF PARTS

LINE NO.	NAME OF PART	NUMBER REQ'D PER COMPONENT	PIECE-MARK	MATERIAL: SIZE OR FORM	MATERIAL: KIND	MATERIAL: GRADE	MATERIAL: SPEC NUMBER	APPROXIMATE UNIT WEIGHT (GRAINS)	APPROX GROSS WT OF RAW STOCK PER 1000 ASSEMBLIES	REMARKS
1	ASSEMBLY		73-2-138A				50-17-20	1.413.048.00		
2										
3										
4										
5	BODY ASSEMBLY		73-2-139R					7620.00		
6	BODY	1	73-2-139H	BAR	STEEL	WDX 1112	57-107	7550.00		(d)(Pb)
7	INTERRUPTER	1	73-2-139E	ROD	BRASS	B, HALF HARD	QQ-B-611	61.42		
8	SPRING, INTERRUPTER	1	73-2-139G	WIRE	STEEL	COMP A	QQ-W-470	2.30		(b) (Pb)
9	DISC, INTERRUPTER, CLOSING	1	73-2-139D	STRIP	BRASS	C, HALF HARD	QQ-B-611	5.56		(c)
10										
11										
12	BODY, ASSEMBLY (ALT)		73-2-139S					7532.00		
13	BODY	1	73-2-139M	BAR	STEEL	WDX 1112	57-107	7480.00		(a)
14	INTERRUPTER	1	73-2-139E	ROD	BRASS	B, HALF HARD	QQ-B-611	61.49		
15	SPRING, INTERRUPTER	1	73-2-139G	WIRE	STEEL	COMP A	QQ-W-470	2.30		(b) (Pb)
16	PLUG, INTERRUPTER, CLOSING	1	73-2-139L	ROD	BRASS	B, HALF HARD	QQ-B-611	48.63		
17										
18										
19	HEAD ASSEMBLY		73-2-140C					1157.00		
20	HEAD, METAL PARTS ASSEMBLY		73-2-268A					1144.00		
21	HEAD	1	73-2-268B	ROD	BRASS	B, HALF HARD	QQ-B-611	1122.00		
22	SUPPORT, FIRING PIN	1	73-2-128D	STRIP	GILDING METAL		57-171-2	6.00		
23	WASHER, CLOSING DISC	1	73-2-128P	STRIP	BRASS	C-HARD	QQ-B-611	3.00		(c)
24	DISC, CLOSING	1	73-2-128N	SHEET	ALUMINUM	CLASS A	QQ-A-561	.60		
25										
26	PIN, FIRING, ASSEMBLY		73-2-128A					10.00		
27	PIN, FIRING	1	73-2-128C	ROD	ALUMINUM-ALLOY	CONDITION-T	QQ-A-351	2.00		(d)
28	STRIKER	1	73-2-128B	ROD	ALUMINUM-ALLOY	CONDITION-T	QQ-A-351	8.00		(d)
29										
30	PIN, FIRING ASSEMBLY (ALT)	1	73-2-128U		(PLASTIC HEAD WITH 73-2-128W)			10.00		(e)
31	PIN, FIRING (ALT)	1	73-2-128W	ROD	STEEL	WD1010 TO WD1035	57-107			(f) (Pb)
32										
33	PIN, FIRING ASSEMBLY (ALT)	1	73-2-128S	ROD	ALUMINUM-ALLOY	CONDITION-T	QQ-A-351	10.00		(d)
34										
35										
36	DETONATOR ASSEMBLY, M24	1	73-2-191A				PXS-1048	10.00		
37	CUSHION, DETONATOR	1	73-2-128L	SHEET	COMPRESSED CORK		COMMERCIAL	.15		
38	SCREW, DETONATOR RETAINING	1	73-2-128M	ROD	BRASS	B, HALF HARD	QQ-B-611	7.00		
39	SCREW, DETONATOR RETAINING (ALT)	1	73-2-128T	ROD	BRASS	B, HALF HARD	QQ-B-611	7.00		
40										
41										
42	TUBE, FLASH		73-2-268C	ROD	STEEL	WD 1035 TO WDX 1335	57-107	273.00		(h) (Pb)
43										
44										
45	OGIVE		73-2-200L	CASTING	AL-BASE ALLOY, DIE CASTING	CLASS 2	QQ-A-591	785.00		
46	OGIVE (ALT)		73-2-200M	SHEET	STEEL, COLD ROLLED	WD-1010	57-136	785.00		(Pb)
47										
48					LACQUER, CLEAR		3-184			
49										
50										

ALTERNATIVES:-
(a) 1. STEEL FORGING WDX 1112 NORMALIZED, SPEC. 57-105 (Pb)
2. COMMERCIAL BRASS, ROD, COMPOSITION B, HALF HARD, SPEC. QQ-B-611
3. BRASS FREE MACHINING FORGINGS SPEC. 57-161-2

(b) SPEC. QQ-W-474 MAY BE USED, EXCEPT FOR CHEMICAL ANALYSIS.

(c) STEEL, WD1010 TO WD1020, SHEET, C.R. SPEC. 57-136 (Pb)

(d) SPEC. AXS-1318 MAY BE USED, PROVIDED PHYSICAL REQUIREMENTS OF SPEC. QQ-A-351 ARE MAINTAINED.

(e) PLASTIC HEAD, SPEC. AXS-698

(f) STEEL, WD 1115, SPEC. 57-107 (Pb)

(h) STEEL, TUBING, TYPE 1, SPEC. 57-180, (P) EXCEPT FOR MIN. PHYSICAL PROPERTIES, AS FOLLOWS:
TS_____90,000 | EL____10%
YP_____75,000

(P) PROTECTIVE FINISHES, SPEC 57-0-2:
(Pa) TYPE I, RS OR RSC
(Pb) TYPE I, TS OR TSC

LINE NO.	LIST OF SPECIFICATIONS	SPEC. NUMBER *	REQUIRED BY
1	AMMUNITION, EXCEPT SMALL ARMS AMM GENERAL SPEC. FOR	50-0-1	DRG 73-2-138
2	ALUMINUM-ALLOY; BARS, RODS, SHAPES AND WIRE	QQ-A-351	DRG 73-2-128
3	ALUMINUM; PLATES AND SHEETS	QQ-A-561	DRG 73-2-128
4	ALUMINUM-BASE-ALLOY; DIE-CASTING	QQ-A-591	DRG 73-2-200
5	ALUMINUM-ALLOY, FREE MACHINING, BARS AND RODS	AXS-1318	DRG 73-2-128
6	BRASS, COMMERCIAL, BARS, PLATES, RODS SHAPES, ETC.	QQ-B-611	DRG 73-2-268
7	BRASS, FREE MACHINING, FORGINGS	57-161-2	DRG 73-2-139
8	DETONATORS, LOADING ASSEMBLY AND PACKING	PXS-1048	DRG 73-2-191
9			
10	FINISHES, PROTECTIVE, ON IRON AND STEEL PARTS	57-0-2	DRG 73-2-139
11	FORGINGS, SMALL ARMS, AUTOMOTIVE DROP, ETC.	57-105	DRG 73-2-139
12			
13			
14			
15	FUZE, POINT DETONATING, M57, LOADING, ASSEMBLING & PACKING	50-17-20	DRG 73-2-138
16	FUZE, POINT DETONATING, M57, METAL PARTS, FOR	50-40-12	DRG 73-2-138
17			
18	LACQUER, RUST-INHIBITING CLEAR	3-184	DRG 73-2-138
19	METAL, GILDING (95/5 BRASS) SHEETS AND STRIPS	57-171-2	DRG 73-2-128
20	METALS; GENERAL SPEC. FOR INSPECTION OF	QQ-M-151	QQ-B-611
21			
22	ORGANIC PLASTIC, GENERAL SPEC. TEST METHODS	L-P-406	AXS-698
23			
24	PLASTIC, MOLDED PARTS FOR AMMUNITION	AXS-698	DRG 73-2-128
25			
26	STEEL, CARBON AND ALLOY; SHEETS AND STRIPS	57-136	DRG 73-2-200
27	STEEL, CARBON AND ALLOY; BARS	57-107	DRG 73-2-139
28	TUBING, ROUND, STEEL, CARBON AND ALLOY, ETC	57-180	DRG 73-2-268
29	WIRE, STEEL (CARBON) SPRING, MUSIC	QQ-W-470	DRG 73-2-139
30	WIRE, STEEL (CARBON) SPRING, OIL TEMPERED	QQ-W-474	DRG 73-2-139
31			
32			
33			
34			

* THE SPECIFICATIONS NUMBERS SHOWN ARE BASIC NUMBERS ONLY. WHEN A SPECIFICATION IS REVISED A LETTER IS AFFIXED TO ITS BASIC NUMBER. SPECIFICATIONS REFERRED TO IN THESE SPECIFICATIONS AND NOT LISTED HEREON, SHALL NOT APPLY.

SUPERSEDES 73-2-138A, WITH CHANGE AUGUST 15, 1945

FUZE, POINT DETONATING, M57 LIST OF PARTS AND LIST OF SPECIFICATIONS

MARCH 17, 1936

CLASS	DIVISION	DRAWING	FILE
73	2	138A	

REVISIONS
13 8-15-45
14

DRG. PERTAINS TO
73-2-138

TOLERANCE ON DIMENSIONS NOT OTHERWISE SPECIFIED
DECIMAL ±
FRACTIONAL ±
ANGULAR ±

D'FTSMAN A.F.N. | TRACER A.F.N. | ORD. ENGINEER
CHECKER | HEAD ENGINEER

SUBMITTED:
Lt. COL., ORD. DEPT. U.S.A.

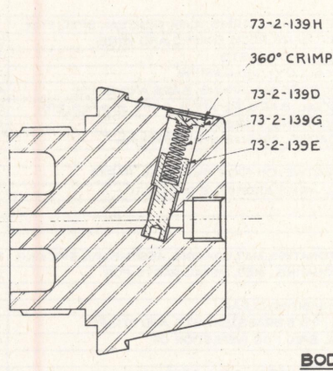
EXAMINED:
ENG-ORD. DEPT. U.S.A.

APPROVED BY ORDER OF THE CHIEF OF ORDNANCE:
A. Adelman
ORD. DEPT., U.S.A.

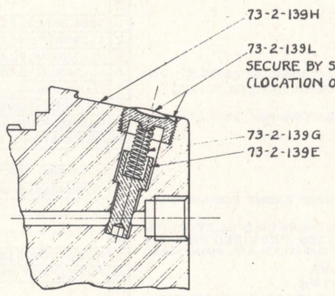
D

ORDNANCE DEPT., U.S.A.

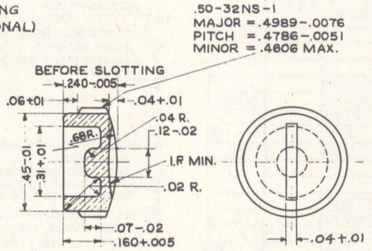
OBSOLESCENT



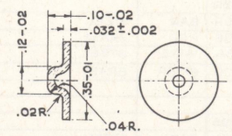
BODY ASSEMBLY 73-2-139R15
2/1



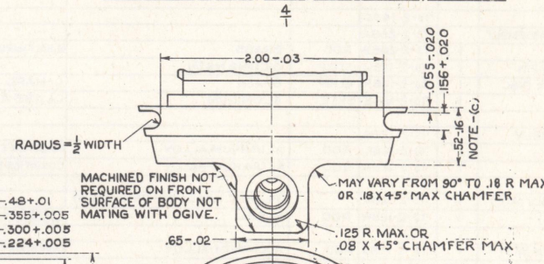
BODY ASSEMBLY (ALT) 73-2-139S15
2/1

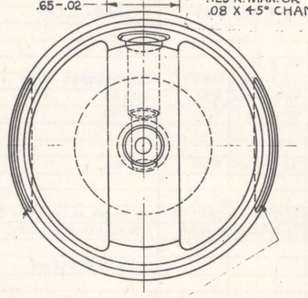


PLUG, INTERRUPTER CLOSING 73-2-139L15
COMMERCIAL BRASS, ROD, COMPOSITION B, HALF HARD
FINISH ∫
4/1

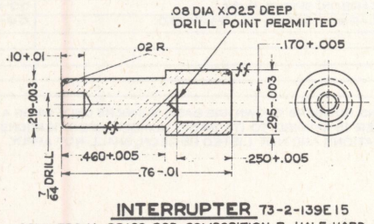


DISC, INTERRUPTER CLOSING 73-2-139D14
COMMERCIAL BRASS, STRIP, COMPOSITION C, HALF HARD
4/1

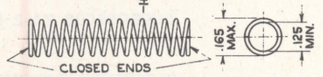




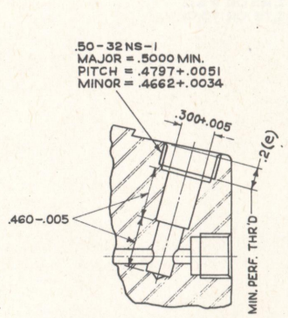
NOTE (5)



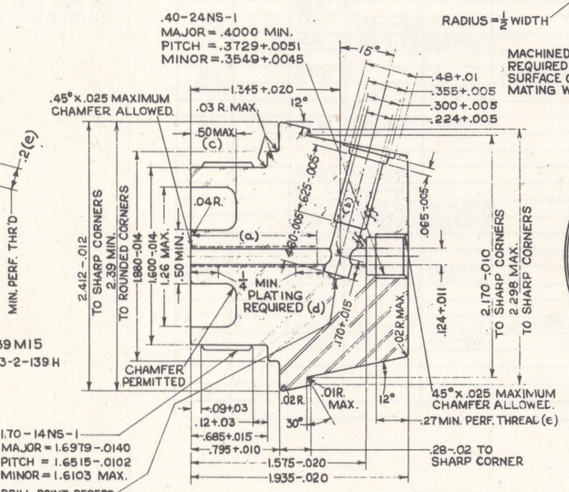
INTERRUPTER 73-2-139E15
COMMERCIAL BRASS, ROD, COMPOSITION B, HALF HARD
FINISH ∫ (EXCEPT AS NOTED)
4/1



SPRING, INTERRUPTER 73-2-139G14
STEEL, WIRE, MUSIC SPRING, WD1085W
4/1



BODY (ALT) 73-2-139M15
FOR OTHER INFORMATION SEE 73-2-139H



BODY 73-2-139H15
STEEL, WDX1112
FINISH ∫ (EXCEPT AS NOTED)
2/1

REQUIREMENTS

A - SOLID HEIGHT NOT OVER .24 INCHES
B - WIND LEFT HAND
C - SEASON THOROUGHLY AFTER WINDING
D - TREAT, TO REMOVE EMBRITTLEMENT, WITHIN 24 HOURS AFTER PLATING.
E - MUST MEET ARMING LIMITS OF INTERRUPTER AS SPECIFIED UNDER ASSEMBLY. OCCASIONAL CHECK WILL BE MADE, AFTER COMPRESSION FOR AT LEAST 24 HOURS AT THE ASSEMBLED HEIGHT.

ADVISORY DATA

(MAY BE VARIED TO MEET REQUIREMENTS)
A - DIAMETER OF WIRE = .014 INCH.
B - TOTAL NUMBER OF COILS = 14.
C - TOTAL NUMBER OF ACTIVE COILS = 12.
D - ADJUST FREE HEIGHT TO MEET LOAD AT .3 INCH. SUGGESTED TRIAL FREE HEIGHT = .6 IN.
E - LOAD AT .3 INCH = 7 1/2 OZ. ± 5/8 OZ.
F - LOAD APPLIES AFTER SEASONING, PLATING AND TREATMENT TO REMOVE EMBRITTLEMENT.
G - SEASON BY HEATING TO 500° F FOR 30 MINUTES.
H - TO REMOVE EMBRITTLEMENT, HEAT TO 300° F FOR AT LEAST 30 MINUTES AS SOON AFTER PLATING AS PRACTICABLE.

NOTES :-
(a) MAY BE 5/32 DRILL FOR 1.12 MAX. DEPTH.
(b) MAXIMUM OF .0075 INCH MISALIGNMENT PERMITTED BETWEEN CENTER LINES OF INTERRUPTER CAVITY AND FLASH HOLE.
(c) VARY THIS DIM. TO OBTAIN BODY WEIGHT OF 7550 ± 150 GRAINS. VARIATION BETWEEN ANY TWO POINTS ON THE PERIPHERY MUST NOT EXCEED .025
(d) ENTIRE LENGTH OF HOLE MAY BE PLATED.
(e) DEPTH OF MINIMUM PERFECT THREADS MAY BE REDUCED BY 1/2 PITCH IF FORMED WITH TAP HAVING LEAD OF 1 PITCH OR GREATER.
(5) POSITION OF WRENCH SLOTS RELATIVE TO INTERRUPTER CAVITY, OPTIONAL.

FOR PROTECTIVE FINISHES AND ALTERNATIVE MATERIALS, SEE DRG. 73-2-138A.

SUPERSEDES 73-2-139 WITH CHANGE AUGUST 15, 1945

FUZE, POINT DETONATING, M57 DETAILS

MARCH 17, 1936	CLASS	DIVISION	DRAWING	FILE
REVISIONS	73	2	139	
15 8-15-45				
16				

TOLERANCE ON DIMENSIONS NOT OTHERWISE SPECIFIED
DECIMAL ±
FRACTIONAL ±
ANGULAR ±

DFTSMAN	TRACER	ORD. ENGINEER
S.K.	S.K.	
CHECKED		HEAD ENGINEER

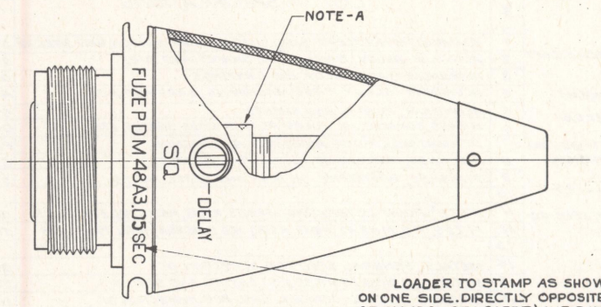
DRG. PERTAINS TO
73-2-138
73-2-149
D

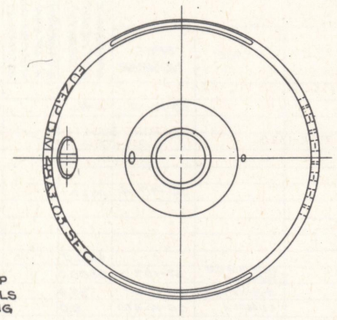
SUBMITTED: W. Gallagher, LT.COL., ORD. DEPT. U.S.A.
EXAMINED: A. E. Warfield, ENG-ORD DEPT. U.S.A.
APPROVED BY ORDER OF THE CHIEF OF ORDNANCE: A. Adelman, ORD. DEPT. U.S.A.

ORDNANCE DEPT., U.S.A.

OBSOLESCENT

LINE NO	LIST OF DRAWINGS	DRAWING NUMBER
1	ASSEMBLY	73-2-140
2	LIST OF PARTS AND LIST OF SPEC'S	73-2-140A
3	DETAILS	73-2-128
4	DETAILS	73-2-200
5	DETONATOR ASSEMBLY, M24	73-2-191
6	BODY ASSEMBLY	73-2-143
7	DELAY PLUNGER ASSEMBLY, M1	73-2-144
8	DETAILS	73-2-268
9	CONTAINER, FIBER	PIF-18
10	PACKING AND MARKING OF CONTAINER	75-14-218
11	BOX & PACKING & MARKING OF BOX	20-4-190
12	PACKING BOX	76-1-522B



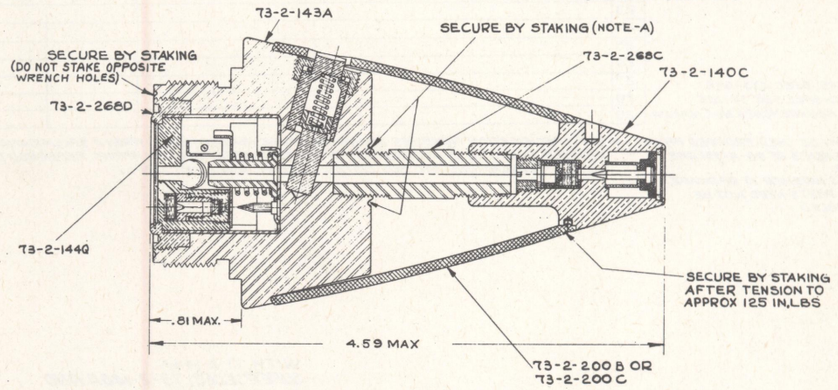


LOADER TO STAMP AS SHOWN WITH $\frac{1}{8}$ LETTERS AND FIGURES $\frac{1}{64}$ DEEP ON ONE SIDE. DIRECTLY OPPOSITE STAMP LOT NUMBER (INCLUDING INITIALS OR SYMBOL OF LOADER) AND DATE (MONTH AND YEAR) LOADED. STAMPING TO BE CENTERED APPROXIMATELY 90° FROM WRENCH SLOTS

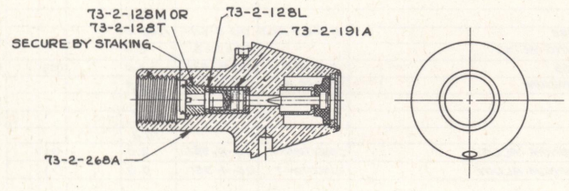
SAMPLE STAMPING: [00-0-00] [00-00]

LOT NUMBER — MONTH AND YEAR LOADED

NOTE: WHEN THIS FUZE IS TO BE USED AS A COMPONENT OF ANOTHER FUZE OMIT STAMPING.



ASSEMBLY 73-2-140B9
WEIGHT 1.41 LBS



HEAD ASSEMBLY 73-2-140C7
(FORMERLY 73-2-143C)

NOTE-A
ALTERNATIVE - STAKE BY FORCING A CONICAL SHAPED TOOL AT RIGHT ANGLES TO TUBE INTO OPPOSITE SIDES OF BODY.

0 1 2 3 4 5 INCHES

SUPERSEDES 73-2-140, 73-2-143 & 73-2-145 WITH CHANGE AUGUST 15, 1945

FUZE, P D, M48A3 ASSEMBLY

JULY 29, 1938	CLASS	DIVISION	DRAWING	FILE
REVISIONS	73	2	140	

7	8-15-45	
8	8-2-48	
9	10-18-49	

TOLERANCE ON DIMENSIONS NOT OTHERWISE SPECIFIED
DECIMAL ±
FRACTIONAL ±
ANGULAR ±

D'FTSMAN	TRACER	ORD., ENGINEER
W.R.T.	W.R.T.	
CHECKER	G.O.	HEAD ENGINEER
J.H.T.		E.W.D.

SUBMITTED:- Lt. Col., Ord. Dept., U.S.A.

EXAMINED:- Ord. Dept., U.S.A.

APPROVED BY ORDER OF THE CHIEF OF ORDNANCE:- C.S. Reed 24.4. Col., Ord. Dept., U.S.A.

ORDNANCE DEPT., U.S.A.

DRG. PERTAINS TO

73-2-163	FUZE, P.D, M51A5M003
73-2-251	FUZE, P.D, M81A1
73-2-146	FUZE, P.D, M51A5

D

LIST OF PARTS

LINE NO.	NAME OF PART	NUMBER REQUIRED PER COMPONENT	PIECEMARK	MATERIAL: SIZE OR FORM	MATERIAL: KIND	MATERIAL: GRADE	MATERIAL: SPEC. NUMBER	APPROXIMATE UNIT WEIGHT (GRAINS)	APPROX. GROSS WT. OF CLEAN STOCK REQUIRED FOR ASSEMBLIES	REMARKS
1										
2	ASSEMBLY		73-2-140B				50-17-15	1.41LB.		
3										
4										
5										
6										
7	DELAY PLUNGER ASSEMBLY		73-2-144Q				50-95-4	1157.0		
8										
9										
10										
11	BODY ASSEMBLY		73-2-143A					6100.0		
12	BODY	1	73-2-143B	BAR OR FORGING	STEEL	WD X1314 OR WD X1318	57-107	5890.0		(pb)(m)
13	RETAINER, SETTING SLEEVE	1	73-2-143H	ROD	BRASS	B-HALF HARD	QQ-B-611	35.0		
14	SPRING, TENSION	1	73-2-143F	WIRE	STEEL	COMP-A	QQ-W-470	2.0		(pb)(a)
15	INTERRUPTER	1	73-2-143G	ROD	BRASS	B-HALF HARD	QQ-B-611	42.0		
16	WASHER, SETTING SLEEVE	1	73-2-143N	SHEET	STEEL	WD 1010	57-136	3.0		(pb)(s)
17										
18	SETTING SLEEVE SUB-ASSEMBLY		73-2-200N					85.0		(t)
19	SLEEVE, SETTING	1	73-2-200H	ROD	BRASS	B-HALF HARD	QQ-B-611	67.0		
20	CUP, SPRING	1	73-2-200K	ROD	BRASS	B-HALF HARD	QQ-B-611	16.0		
21	SPRING, INTERRUPTER	1	73-2-200P	WIRE	STEEL	COMP A	QQ-W-470	2.0		(pb)(a)
22										
23										
24	HEAD ASSEMBLY		73-2-140C					1137.0		
25	HEAD, METAL PARTS ASSEM.		73-2-268A					1144.0		
26	HEAD	1	73-2-268B	ROD	BRASS	B-HALF HARD	QQ-B-611	1122.0		
27	SUPPORT, FIRING PIN	1	73-2-128D	STRIP	GILDING METAL		57-171-2	6.0		
28	WASHER, CLOSING DISC	1	73-2-128P	STRIP	BRASS	C-HARD	QQ-B-611	3.0		(e)
29	DISC, CLOSING	1	73-2-128N	SHEET	ALUMINUM	CLASS A	QQ-A-561	0.6		
30										
31										
32	PIN, FIRING, ASSEMBLY		73-2-128A					10.0		
33	PIN, FIRING	1	73-2-128C	ROD	ALUMINUM-ALLOY	CONDITION-T	QQ-A-351	2.0		(r)
34	STRIKER	1	73-2-128B	ROD	ALUMINUM ALLOY	CONDITION-T	QQ-A-351	8.0		(r)
35										
36										
37	PIN, FIRING ASSEM (ALT.)	1	73-2-128U		(PLASTIC HEAD WITH 73-2-128W)			10.0		(K)
38	PIN, FIRING (ALT.)	1	73-2-128W	ROD	STEEL	WD 1010 TO WD 1035	57-107			(pb) (c)
39										
40										
41	PIN, FIRING, ASSEM. (ALT.)	1	73-2-128S	ROD	ALUMINUM ALLOY	CONDITION-T	QQ-A-351	10.0		(r)
42										
43										
44	DETONATOR ASSEM. M24	1	73-2-191A				PXS-1048	10.0		
45	CUSHION, DETONATOR	1	73-2-128L	SHEET	COMPRESSED CORK		COMMERCIAL	.15		
46	SCREW, DETONATOR, RETAINING	1	73-2-128M	ROD	BRASS	B-HALF HARD	QQ-B-611	7.00		
47	SCREW, DETONATOR, RETAIN. ALT.		73-2-128T	ROD	BRASS	B-HALF HARD	QQ-B-611	7.00		
48										
49										
50	BOTTOM CLOSING SCREW ASSEM.		73-2-268D					410.0		
51	SCREW, BOTTOM CLOSING	1	73-2-268E	ROD	BRASS	B-HALF HARD	QQ-B-611	405.0		
52	DISC, BOTTOM CLOSING SCREW	1	73-2-268F	STRIP	GILDING METAL		57-171-2	5.0		(g) (h)
53										
54										
55	TUBE, FLASH	1	73-2-268C	ROD	STEEL	WD 1035 OR WD 1335	57-107	273.0		(pb)(f)
56										
57										
58										
57	OGIVE	1	73-2-200B	CASTING	AL-BASE ALLOY, DIE CASTING	CLASS 2	QQ-A-591	785.0		
58	OGIVE, ALTERNATIVE		73-2-200C	SHEET	STEEL, COLD ROLLED	WD-1010	57-136	785.0		(pb)
59										
60										
61										
62										
63										
64										

ALTERNATIVE MATERIALS.
(a)-SPEC. QQ-W-474 MAY BE USED EXCEPT FOR CHEMICAL ANALYSIS.
(b)-STEEL, WD 1115, SPEC. 57-107 (pa) (pb)
(e)-STEEL, WD 1010 TO WD 1020, SHEET, C.R. SPEC. 57-136 (pb)
(f)-STEEL, TUBING, TYPE I, SPEC. 57-180, (pa) OR (pb) EXCEPT FOR MIN. PHYSICAL PROPERTIES, AS FOLLOWS;
T. S. _____ 90,000 EL. _____ 10%
Y. P. _____ 75,000
(g) ALUMINUM, SHEET, HALF HARD, SPEC. QQ-A-561

P. PROTECTIVE FINISHES; SPEC. 57-0-2
(pa) TYPE I, R.S, OR RSC
(pb) TYPE I, TS OR TSC

(K)-PLASTIC HEAD, SPEC. AXS-698
(m)-FOR FORGING SPEC. SEE 57-105
(n)-GRAIN SIZE REQUIREMENTS NOT MANDATORY.
(r)-AXS-1318 MAY BE USED PROVIDED PHYSICAL REQUIREMENTS OF QQ-A-351 ARE MAINTAINED.
(s) USE OF THIS WASHER IS OPTIONAL.
(t) COMPONENT PARTS NEED NOT BE PRE-ASSEMBLED

LIST OF SPECIFICATIONS

LINE NO.	LIST OF SPECIFICATIONS	SPECIFICATION NUMBER *	REQUIRED BY
1	AMMUNITION, EXCEPT SMALL ARMS AMMUNITION, GEN. SPEC. FOR	50-0-1	DRG. 73-2-140
2	ALUMINUM-ALLOY, BARS, RODS, SHAPES AND WIRE	QQ-A-351	DRG. 73-2-128
3	ALUMINUM-BASE ALLOY DIE CASTINGS	QQ-A-591	DRG. 73-2-200
4	ALUMINUM-ALLOY FREE MACHINING, BARS AND RODS	AXS-1318	DRG. 73-2-128
5	ALUMINUM, PLATES AND SHEETS	QQ-A-561	DRG. 73-2-128
6	BRASS, COMMERCIAL, BARS, PLATES, RODS, SHAPES, ETC.	QQ-B-611	DRG. 73-2-143
7	DETONATORS & LOADING ASSEMBLY AND PACKING	PXS-1048	DRG. 73-2-191
8	FORGINGS, SMALL ARMS, AUTOMOTIVE, DROP, ETC.	57-105	DRG. 73-2-143
9	FINISHES, PROTECTIVE, ON IRON AND STEEL PARTS	57-0-2	DRG. 73-2-143
10			
11	FUZE, POINT DETONATING, M48A3, M51A5, M51A6 MOD 3 & M81A1 A.P.	50-17-15	DRG. 73-2-140
12	FUZES, P.D. M48A3, M51A5, M51A5 MOD 3 AND M81N, METAL PARTS FOR	50-40-7	DRG. 73-2-140
13			
14	METALS, GENERAL SPEC. FOR INSPECTION OF	QQ-M-151	57-107
15	METAL, GILDING (95/5 BRASS) SHEETS AND STRIPS	57-171-2	DRG. 73-2-128
16	ORGANIC PLASTIC, GENERAL SPEC. FOR INSPECTION OF	L-P-406	AXS-698
17	STEEL, CARBON AND ALLOY, BARS	57-107	DRG. 73-2-143
18	STEEL, CARBON AND ALLOY, SHEETS AND STRIPS	57-136	DRG. 73-2-200
19	TUBING, MECH. OR STRUCT. STEEL, CARBON AND ALLOY, SEAMLESS, WELDED, BRAZED	57-180	DRG. 73-2-268
20	WIRE, STEEL (CARBON) SPRING, MUSIC	QQ-W-470	DRG. 73-2-143
21	WIRE, STEEL (CARBON) SPRING, OIL TEMPERED	QQ-W-474	DRG. 73-2-143
22	PLASTIC, MOLDED PARTS FOR AMMUNITION	AXS-698	DRG. 73-2-128
23			
24			
25			
26			
27			
28			
29			

* THE SPECIFICATION NUMBERS SHOWN ARE BASIC NUMBERS ONLY. WHEN A SPECIFICATION IS REVISED A LETTER IS AFFIXED TO ITS BASIC NUMBER. SPECIFICATIONS REFERRED TO IN THESE SPECIFICATIONS AND NOT LISTED HEREON SHALL NOT APPLY.

WITH 73-2-144A
SUPERSEDES, 73-2-140A AND
73-2-140B WITH CHANGE AUGUST 15, 1945

FUZE, P.D. M48A3.
LIST OF PARTS AND
LIST OF SPECIFICATIONS.

JULY 29, 1938.

CLASS	DIVISION	DRAWING	FILE
73	2	140A	

REVISIONS

15	8-15-45
16	8-2-48
17	10-18-49

TOLERANCE ON DIMENSIONS NOT OTHERWISE SPECIFIED
DECIMAL ±
FRACTIONAL ±
ANGULAR ±

D'RSMAN	TRACER	ORD. ENGINEER
K.L.M	K.L.M.	
CHECKER		MECH. ENGINEER

DRG. PERTAINS TO

SUBMITTED:
Ingalls
LT. COL., ORD. DEPT. U.S.A.

EXAMINED:
W. P. Stevenson
ORD. DEPT. U.S.A.

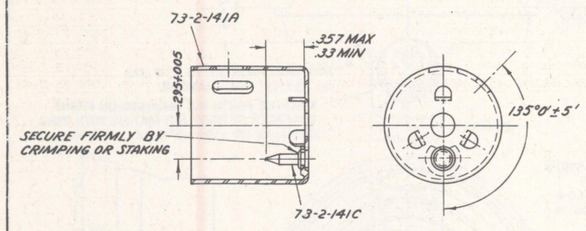
APPROVED BY ORDER OF THE CHIEF OF ORDNANCE:
C. S. Reed by J.A.
COL., ORD. DEPT. U.S.A.

D

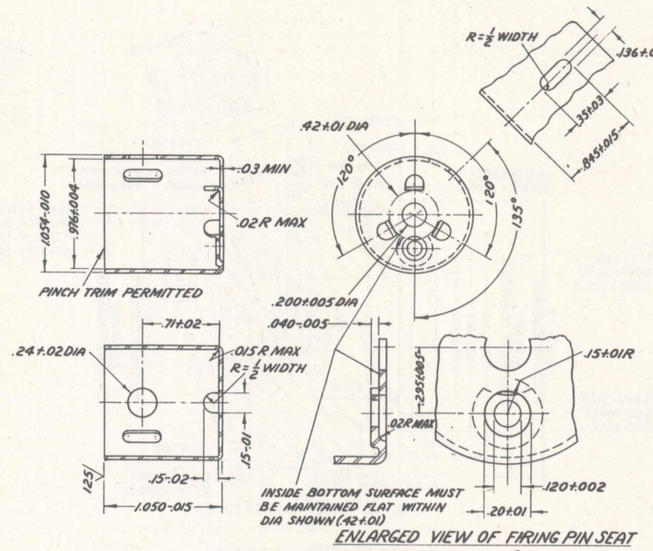
ORDNANCE DEPT. U.S.A.

ORDNANCE DRAWING - SIZE D (ALTERNATIVE)

CL & DIV D

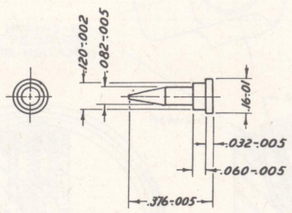


FIRING PIN ASSEMBLY 73-2-141B19

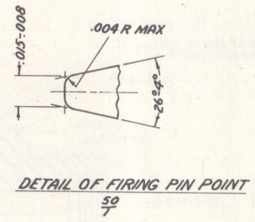


ENLARGED VIEW OF FIRING PIN SEAT

HOUSING, PLUNGER 73-2-141A17
STEEL, WD 1010, HOT-ROLLED ANNEALED



PIN, FIRING 73-2-141C19
STEEL, FS1117, AS-COLD-FINISHED.
FINISH ALL OVER 125



DETAIL OF FIRING PIN POINT
50/7

NOTICE:-THIS DRAWING SHALL NOT BE USED NOR REPRODUCED EITHER WHOLLY OR IN PART EXCEPT WHEN AUTHORIZED IN CONNECTION WITH UNITED STATES GOVERNMENT PROCUREMENT.

FOR ALTERNATIVE MATERIALS AND PROTECTIVE FINISHES SEE DWG 73-2-144A.

SUPERSEDES 73-2-141 WITH CHANGE SEP 30, 1949.

SCALE, INCHES, 2/1, 4/1

DELAY PLUNGER, MI.
DETAILS.

HEAT TREATMENT & PROTECTIVE FINISH	CLASS	DIVISION	DRAWING
	73	2	141

PHYSICAL PROPERTIES

DRAWING PERTAINS TO: 73-2-144

ORIGINAL DATE OF DRAWING JULY 28, 1938

REVISIONS

18	9-30-49		
19	7-25-50	ECO 16174	aco

WEIGHT — DO NOT APPLY PART NO. DO (As Specified)

SCALE —

TOLERANCES ON DIMENSIONS (Unless Otherwise Specified)

DRAFTSMAN: EA. — CHECKED: Bo

TRACED: aco — CHECKED: RRB

W.T. Bo — SUBM. BY

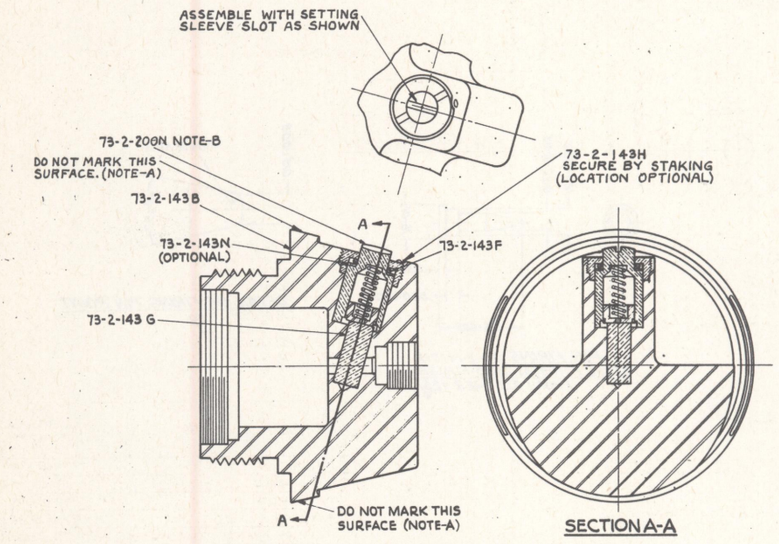
SUBMITTED: ORD. ENG.

EXAMINED: C R Dutton COL.

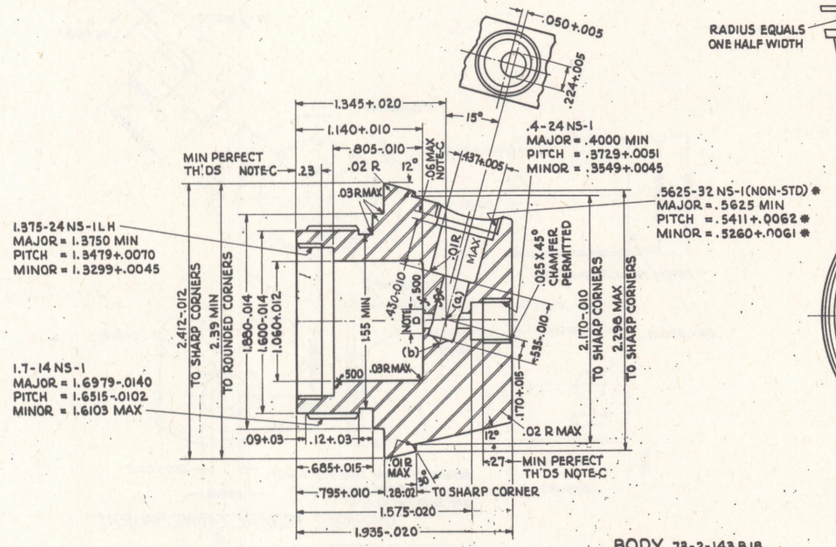
APPROVED: C R Dutton COL.

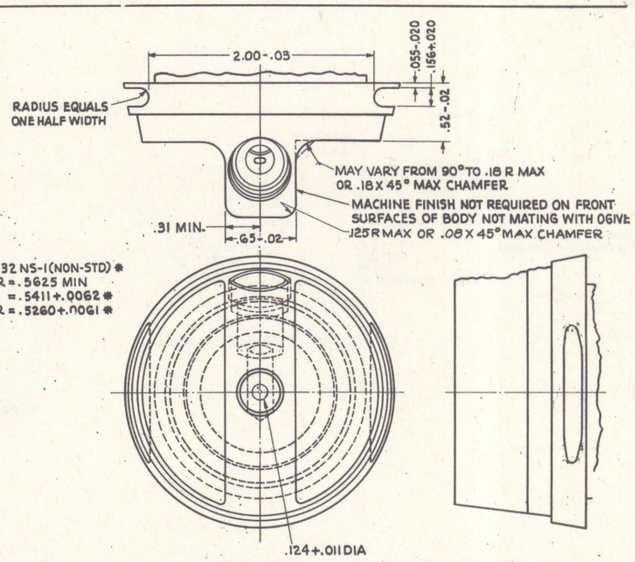
SHEET: D

ORDNANCE DEPT U.S. ARMY



BODY ASSEMBLY 73-2-143 A 18

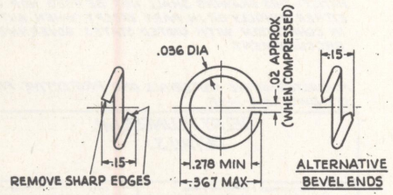




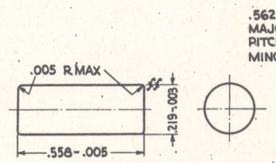
BODY 73-2-143 B 18
STEEL, WDX 1314 OR WDX 1315
FINISH $\frac{2}{1}$

MIN. PHYSICAL PROPERTIES

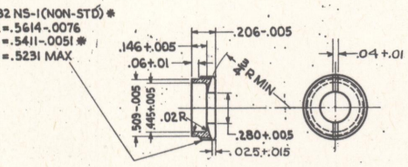
TS	65,000	EL	12%
YP	60,000	RED.	30%



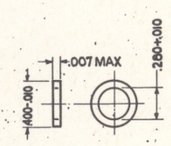
SPRING, TENSION 73-2-143 F 18
STEEL WIRE, COMPOSITION A
$\frac{4}{1}$ (FORMERLY 73-2-141N)



INTERRUPTER 73-2-143 G 18
COMMERCIAL BRASS, ROD, COMPOSITION B, HALF-HARD
FINISH $\frac{4}{1}$
(FORMERLY 73-2-200G)



RETAINER, SETTING SLEEVE 73-2-143 H 18
COMMERCIAL BRASS, ROD, COMPOSITION B, HALF-HARD
FINISH $\frac{2}{1}$
(FORMERLY 73-2-200D)



WASHER, SETTING SLEEVE (OPTIONAL) 73-2-143N18
STEEL, WD1010
$\frac{2}{1}$

FOR ALTERNATIVE MATERIALS AND PROTECTIVE FINISHES, SEE LIST OF PARTS

WITH 73-2-200, AND 73-2-268, 73-2-140
SUPERSEDES 73-2-141, 73-2-143 & 73-2-200
WITH CHANGE AUGUST 15, 1945

NOTES:
A - MFR. MAY STAMP INITIALS OR SYMBOL WITH $\frac{1}{8}$ LETTERS OR FIGURES (6 MAX) .01 DEEP ON ANY EXTERIOR SURFACE EXCEPT AS SHOWN.
B - COMPONENT PARTS NEED NOT BE PRE-ASSEMBLED AS SHOWN ON 73-2-200L
C - DEPTH OF MINIMUM PERFECT THREADS MAY BE REDUCED BY $\frac{1}{2}$ PITCH IF FORMED WITH TAP HAVING LEAD OF 1 PITCH OR GREATER.
D - MAX DIA OF .20 STANDARD DRILL SPOT PERMITTED.

(a) MAXIMUM OF .0075 MISALIGNMENT PERMITTED BETWEEN CENTER LINES OF INTERRUPTER CAVITY AND FLASH HOLE.

(b) DRILL POINT RECESS OF .150 DIA BY .050 PERMITTED.

REMOVE ALL BURRS

FUZE, PD, M48A3 ET AL DETAILS

JULY 29, 1938	CLASS	DIVISION	DRAWING	FILE
REVISIONS	73	2	143	

18	8-13-45	
19	10-18-49	

TOLERANCE ON DIMENSIONS NOT OTHERWISE SPECIFIED
DECIMAL ±
FRACTIONAL ±
ANGULAR ±

DFTSMAN	TRACER	ORD. ENGINEER
DCS	DCS	
CHECKER		HEAD ENGINEER
VRT		

SUBMITTED: Lt. Col., Ord. Dept., U.S.A.
EXAMINED: Capt., Ord. Dept., U.S.A.
APPROVED BY ORDER OF THE CHIEF OF ORDNANCE: Col., Ord. Dept., U.S.A.

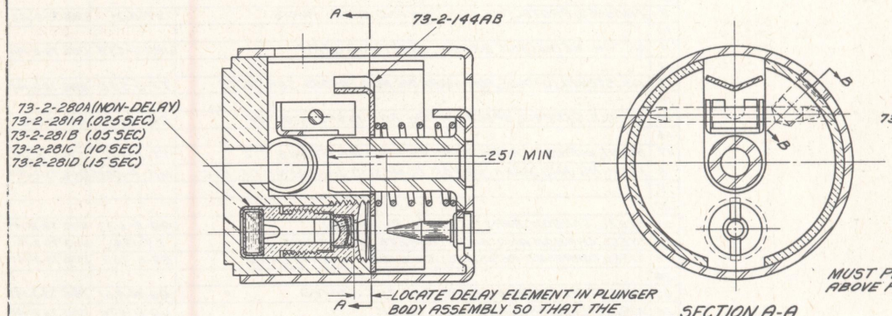
DRG. PERTAINS TO

73-2-140	FUZE, PD, M48A3
73-2-163	FUZE, PD, M51A5 M603

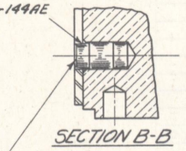
D

ORDNANCE DEPT., U.S.A.

ARMY SERVICE FORCES
ORDNANCE DEPARTMENT
ORDNANCE DRAWING - SIZE D (ALTERNATIVE)

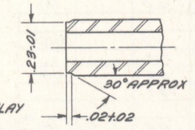


SECTION A-A

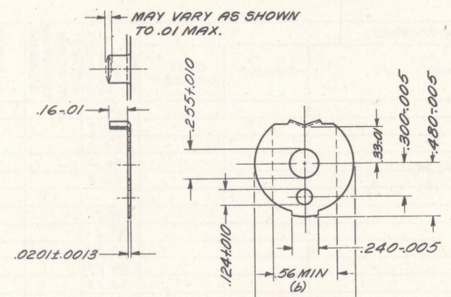


SECTION B-B

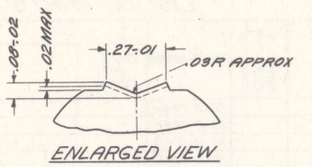
MUST PROTRUDE .032-.008 ABOVE PLUNGER BODY.



ALTERNATIVE END

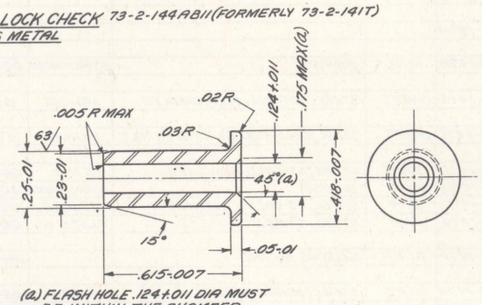


WASHER, LOCK CHECK 73-2-144AB11 (FORMERLY 73-2-141T)
GILDING METAL



ENLARGED VIEW

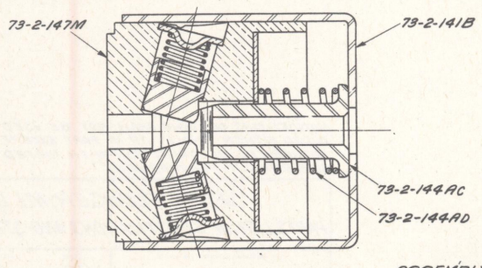
(b):- DIMENSION .885-.005 MAY BE REDUCED TO .56 MIN AS SHOWN IF DESIRED.

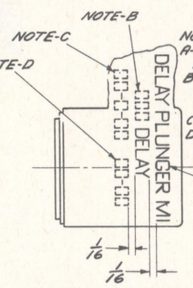


(a) FLASH HOLE .124±.011 DIA MUST BE WITHIN THE CHAMFER.

THIS DELAY PLUNGER FOR USE IN THE FOLLOWING:
FUZE, PD, M48A3
FUZE, PD, M51A5
FUZE, PD, M51A5, MOD 3
FUZE, PD, M81A1
FUZE, CP, M78A1
FUZE, PD, T69E4
FUZE, PD, T155E2
FUZE, PD, T177E2

LINE NO	LIST OF DRAWINGS	DRAWING NUMBER
1	ASSEMBLY	73-2-144
2	DETAILS	73-2-147
3	DETAILS	73-2-141
4	DELAY ELEMENT, M2	73-2-281
5	DELAY ELEMENT, M1, NON-DELAY	73-2-280
6	LIST OF PARTS AND LIST OF SPECS	73-2-144A
7	CONTAINER, METAL	76-7-739
8	BOX, PACKING	76-7-740
9		



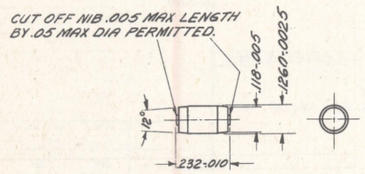


NOTES:-
A-INSERT DESIGNATION OF DELAY PLUNGER.
B-INSERT NON-, .025 SEC, .05 SEC, .10 SEC, OR .15 SEC AS APPLICABLE.
C-INSERT LOADERS LOT NUMBER.
D-INSERT DATE (MONTH AND YEAR) LOADED.

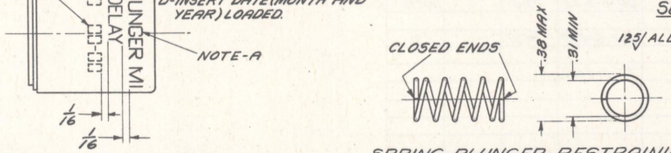
MARKING DIAGRAM

MARK WITH LETTERS AND FIGURES 1/8 INCH HIGH USING BLACK STENCIL INK AS INDICATED.

ASSEMBLY (NON-DELAY) 73-2-144 N 13
ASSEMBLY (.025 SEC) 73-2-144 P 13
ASSEMBLY (.05 SEC) 73-2-144 Q 13
ASSEMBLY (.10 SEC) 73-2-144 AA 13
ASSEMBLY (.15 SEC) 73-2-144 R 13



PIN, GUIDE 73-2-144AE13
COMMERCIAL BRASS, ROD, COMPOSITION B, HALF-HARD
FINISH ALL OVER 125



SUPPORT, PLUNGER 73-2-144AC13 (FORMERLY 73-2-1410)
STEEL, FS 1137, AS-COLD-FINISHED.
125 ALL OVER EXCEPT AS NOTED.

MIN PHYSICAL PROPERTIES

TS 160,000	EL 4%
YP 125,000	RED 25%

ROCKWELL C35 MIN TO C50 MAX BEFORE PLATING.

SPRING, PLUNGER, RESTRAINING 73-2-144AD11 (FORMERLY 73-2-141L)
STEEL, WIRE, MUSIC SPRING, COMPOSITION A

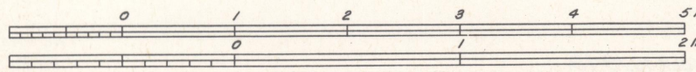
REQUIREMENTS

A-SOLID HEIGHT NOT OVER .16 INCH.
B-SEASON THOROUGHLY AFTER WINDING.
C-WITHIN 24 HOURS AFTER PLATING, TREAT TO REMOVE EMBRITTLEMENT.
D-LOAD AT .2 INCH = 2 LBS 10 OZ MAX.
E-LOAD AT ASSEMBLED HEIGHT .375 INCH = 1 LB 5 OZ MIN (OCCASIONAL CHECK WILL BE MADE AFTER COMPRESSION FOR AT LEAST 24 HRS AT ASSEMBLED HEIGHT)
F-LOADS APPLY AFTER SEASONING, PLATING AND TREATMENT TO REMOVE EMBRITTLEMENT.

ADVISORY DATA (MAY BE VARIED TO MEET REQUIREMENTS)

A-DIAMETER OF WIRE = .026 INCH.
B-TOTAL NUMBER OF COILS = 6.
C-NUMBER OF ACTIVE COILS = 4.
D-ADJUST FREE HEIGHT TO MEET LOAD REQUIREMENTS SUGGESTED TRIAL FREE HEIGHT = .8 INCH.
E-SEASON BY HEATING TO 500°F FOR 30 MINUTES.
F-TO REMOVE EMBRITTLEMENT HEAT TO 300°F FOR AT LEAST 30 MINUTES AS SOON AFTER PLATING AS PRACTICABLE.

NOTICE:-THE CONTENTS OF THIS DRAWING SHALL NOT BE USED NOR REPRODUCED EITHER WHOLLY OR IN PART EXCEPT WHEN AUTHORIZED IN CONNECTION WITH UNITED STATES GOVERNMENT PROCUREMENT.



FOR ALTERNATIVE MATERIALS AND PROTECTIVE FINISHES SEE DWG 73-2-144A

DELAY PLUNGER, M1
ASSEMBLY AND DETAILS.

HEAT TREATMENT & PROTECTIVE FINISH

PHYSICAL PROPERTIES

ORIGINAL DATE OF DRAWING JULY 29, 1948

REVISIONS

11	9-30-49		
12	12-14-49		
13	7-25-50	ECO-16174	SP

CLASS	DIVISION	DRAWING
73	2	144

DRAWING PERTAINS TO

WEIGHT

SCALE

TOLERANCES ON DIMENSIONS (Unless Otherwise Specified)

DO NOT SCALE DRAWING

APPLY PART NO. (As Specified)

SUBMITTED
ORD ENGR.

EXAMINED
COL.

APPROVED
COL.

ORDNANCE DEPT U.S. ARMY

D

SUPERSEDES 73-2-144 WITH CHANGE, SEP 30, 1949.

1060

ORDNANCE DRAWING - SIZE D (ALTERNATIVE)

CL & DIV D

LIST OF PARTS

LINE NO.	NAME OF PART	NUMBER REQD PER COMPONENT	PIECE MARK	MATERIAL: SIZE OR FORM	MATERIAL: KIND	MATERIAL: GRADE	MATERIAL: SPEC NUMBER	APPROX UNIT WEIGHT (GRAINS)	APPROX WT OF RAW STOCK PER 1000 ASSEMBLIES	REMARKS
1	ASSEMBLY(NON-DELAY)		73-2-144N					1166.1		
2	ASSEMBLY(.025 SEC)		73-2-144P					1166.3		
3	ASSEMBLY(.05 SEC)		73-2-144Q					1166.4		
4	ASSEMBLY(.10 SEC)		73-2-144AA					1166.6		
5	ASSEMBLY(.15 SEC)		73-2-144R					1166.7		
6										
7	ELEMENT, NON-DELAY, M1		73-2-280A					38.27		
8	ELEMENT, DELAY, M2(.025 SEC)		73-2-281A					38.5		
9	ELEMENT, DELAY, M2(.05 SEC)		73-2-281B					38.59		
10	ELEMENT, DELAY, M2(.10 SEC)		73-2-281C					38.75		
11	ELEMENT, DELAY, M2(.15 SEC)		73-2-281D					38.92		
12										
13	FIRING PIN ASSEMBLY		73-2-141B					245.0		
14										
15	PLUNGER BODY ASSEMBLY		73-2-147M					799.8		
16										
17	BODY, PLUNGER	1	73-2-147B	ROD	BRASS	B, HALF-HARD	QQ-B-611	741.4		
18										
19	HOUSING, PLUNGER	1	73-2-141A	SHEET	STEEL, HOT-ROLLED, ANNEALED	WD1010	57-136	239.0		(a)(K)
20										
21	LOCK, CENTRIFUGAL PLUNGER PIN	1	73-2-147C	SHEET	STEEL, COLD-ROLLED, TEMPER NO. 2	WD1010	57-136	6.0		(K)
22										
23	PIN, FIRING	1	73-2-141C	BAR	STEEL, AS-COLD-FINISHED	FS 1117	QQ-S-633	6.0		(K)(c)
24	PIN, GUIDE	1	73-2-144AE	ROD	BRASS	B, HALF-HARD	QQ-B-611	4.0		
25	PIN, LOCK PIVOT	1	73-2-147D	BAR	STEEL, AS-COLD-FINISHED	FS 1020	QQ-S-633	5.0		(K)(d)
26	PIN, CENTRIFUGAL PLUNGER	2	73-2-147Q	BAR	STEEL, TYPE E	CLASS 6	QQ-S-763	15.0		
27										
28	RETAINER, SPRING	2	73-2-147P	STRIP	GILDING METAL		JAN-G-439	8.0		(e)
29										
30	SPRING, CENTRIFUGAL PIN	2	73-2-147N	WIRE	STEEL, MUSIC SPRING	COMP A	QQ-W-470	.7		(b)
31	SPRING, PLUNGER RESTRAINING	1	73-2-144AD	WIRE	STEEL, MUSIC SPRING	COMP A	QQ-W-470	10.0		(b)
32	SUPPORT, PLUNGER	1	73-2-144AC	BAR	STEEL, AS-COLD-FINISHED	FS 1137	QQ-S-633	39.0		(K)(f)
33										
34	WASHER, LOCK CHECK	1	73-2-144AB	STRIP	GILDING METAL		JAN-G-439	30.0		(g)
35										
36					INK, STENCIL, BLACK		TT-I-558			
37										
38										
39										
40										
41										
42										
43										

(a)- ALTERNATIVE MATERIAL:- (h) STEEL, SHEET, WD1020, HOT-ROLLED, ANNEALED, SPEC 57-136 OR STEEL, SHEET, WD1010 OR WD1020, COLD-ROLLED, SPEC 57-136.
(b)- PROTECTIVE FINISH, TYPE I, CLASS TS OR TSC, SPEC 57-0-2.
(C)- ALTERNATIVE MATERIAL:- (h) STEEL, BAR, FS1035, AS-COLD-FINISHED, SPEC QQ-S-633.
(d)- ALTERNATIVE MATERIAL:- (h) WIRE, STEEL, FS1020, BARE, SPEC QQ-W-461.
(e)- ALTERNATIVE MATERIAL:- (h) STEEL, SHEET, WD1010 OR WD 1020, COLD-ROLLED, SPEC 57-136(h).
(f)- ALTERNATIVE MATERIAL:- (h) STEEL, BAR, FS1035, AS-COLD-FINISHED, SPEC QQ-S-633.
(g)- ALTERNATIVE MATERIAL:- (h) ALUMINUM-ALLOY, SHEET, HALF-HARD, SPEC QQ-A-318 OR ALUMINUM, SHEET, HALF-HARD, SPEC QQ-A-561.
(h)- ALTERNATIVE MATERIALS ARE TO BE USED ONLY WHEN PRESCRIBED MATERIALS ARE NOT AVAILABLE.
(K)- PROTECTIVE FINISH; TYPE I, CLASS RS, TS, RSC OR TSC, SPEC 57-0-2.

SUPERSEDES 73-2-144A WITH CHANGE, SEPTEMBER 30, 1949.

LIST OF SPECIFICATIONS AND STANDARDS

LINE NO.	LIST OF SPECIFICATIONS AND STANDARDS	SPEC OR STD NO. *	REQUIRED BY
1	ALUMINUM-ALLOY (AL-52) (ALUMINUM-MAGNESIUM-CHROMIUM); SHEET	QQ-A-318	DWG 73-2-144
2	ALUMINUM (AL-2); PLATE AND SHEET	QQ-A-561	DWG 73-2-144
3	AMMUNITION, EXCEPT SMALL ARMS AMM, GENERAL SPEC FOR	50-0-1	DWG 73-2-144
4			
5	BRASS, COMMERCIAL; BARS, PLATES, RODS, SHAPES, SHEETS AND STRIPS	QQ-B-611	DWG 73-2-144
6			
7			
8			
9	FINISHES, PROTECTIVE, FOR IRON AND STEEL PARTS	57-0-2	DWG 73-2-144
10			
11	GILDING METAL (95/5 BRASS); SHEET AND STRIP	JAN-G-439	DWG 73-2-144
12			
13	INK, STENCIL; OPAQUE, FOR MARKING NON-POROUS SURFACES	TT-I-558	DWG 73-2-144
14			
15	METALS; GENERAL SPECIFICATION FOR INSPECTION OF	QQ-M-151	QQ-A-318
16			
17	PAINT, VARNISH, LACQUER, AND RELATED MATERIALS, ETC	TT-P-141	TT-I-558
18	PACKING AND MARKING FOR DOMESTIC SHIPMENT OF, ETC	MIL-P-10025	DWG 73-2-144
19			
20			
21	STEEL, CARBON; BARS (GENERAL PURPOSE)	QQ-S-633	DWG 73-2-144
22	STEEL, CARBON AND ALLOY; SHEETS AND STRIPS	57-136	DWG 73-2-141
23	STEEL, CORROSION-RESISTING; BARS AND FORGINGS, ETC	QQ-S-763	DWG 73-2-147
24			
25	WIRE, STEEL (CARBON); BARE AND ZINC COATED	QQ-W-461	DWG 73-2-147
26	WIRE, STEEL (CARBON); SPRING, MUSIC	QQ-W-470	DWG 73-2-144
27			
28	ORDNANCE FINISHES (SURFACE ROUGHNESS)	URAX-6	DWG 73-2-144
29	STANDARD FOR DIMENSIONING AND TOLERANCING	30-1-7	DWG 73-2-144
30	SURFACE ROUGHNESS, WAVINESS AND LAY	MIL-STD-10	DWG 73-2-144

* THE SPECIFICATION AND STANDARD NUMBERS SHOWN ARE BASIC NUMBERS ONLY. WHEN REVISED A LETTER IS AFFIXED TO THE BASIC NUMBER. SPECIFICATIONS REFERRED TO IN THE SPECIFICATIONS AND NOT LISTED HEREON, DO NOT APPLY.

NOTICE:- THIS DRAWING SHALL NOT BE USED NOR REPRODUCED EITHER WHOLLY OR IN PART EXCEPT WHEN AUTHORIZED IN CONNECTION WITH UNITED STATES GOVERNMENT PROCUREMENT.

DELAY PLUNGER, M1. LIST OF PARTS, LIST OF SPECIFICATIONS AND STANDARDS.

HEAT TREATMENT & PROTECTIVE FINISH

PHYSICAL PROPERTIES

OFFICIAL DATE OF DRAWING: AUGUST 15, 1945

REVISIONS
1 9-30-49
2 7-25-50 ECO 16174 ACS

CLASS 73 DIVISION 2 DRAWING 144A

DRAWING PERTAINS TO 73-2-144

WEIGHT — TO MAT. APPR. PART NO. DO (As Specified)

SCALE

TOLERANCES ON DRAWING (Unless otherwise specified)

SUBMITTED ORD. ENGR.

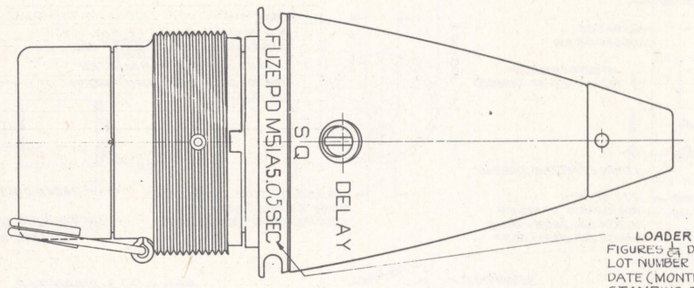
APPROVED C.R. Dutton COL.

APPROVED C.R. Dutton COL.

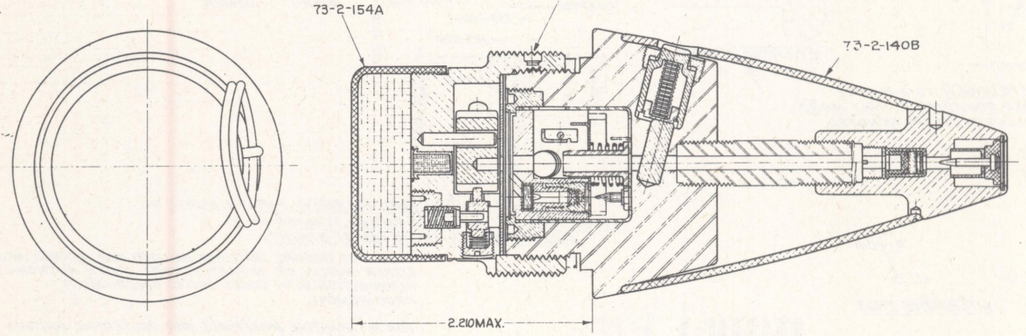
D

ORDNANCE DEPT. U.S. ARMY

77-6666-4



LOADER TO STAMP AS SHOWN WITH $\frac{1}{8}$ LETTERS AND FIGURES $\frac{1}{64}$ DEEP ON ONE SIDE, DIRECTLY OPPOSITE STAMP LOT NUMBER (INCLUDING INITIALS OR SYMBOL OF LOADER) AND DATE (MONTH AND YEAR) LOADED.
STAMPING TO BE CENTERED APPROXIMATELY 90° FROM WRENCH HOLE SLOTS.
SAMPLE STAMPING: [00-0-00] [00-00]
LOT NUMBER — MONTH AND YEAR



ASSEMBLY 73-2-146B9

LIST OF PARTS

*LINE NO.	NAME OF PART	NUMBER REQ'D. PER COMPONENT	PIECE-MARK	MATERIAL: SIZE OR FORM	MATERIAL: KIND	MATERIAL: GRADE	MATERIAL: SPEC. NUMBER	APPROXIMATE UNIT WEIGHT (POUNDS)	APPROX. GROSS WT. OF RAW STOCK PER 1000 ASSEMBLIES	REMARKS
1	ASSEMBLY		73-2-146B				50-17-15	2.15		
2										
3	BOOSTER, M21A4 ASSEMBLY		73-2-154A				50-16-5	.74		
4	FUZE (M48A3)		73-2-140B				50-17-15	1.41		
5										

LIST OF SPECIFICATIONS

LINE NO.	LIST OF SPECIFICATIONS	SPEC. NUMBER *	REQUIRED BY
1	AMMUNITION, EXCEPT SMALL ARMS AMM., GENERAL SPEC. FOR	50-0-1	DRG. 73-2-146
2			
3	FUZE, PD, M48A3, M51A5, M51A5 MOD 3, & M81A1 L.A.P.	50-17-15	DRG. 73-2-146
4	BOOSTER, M21A4, L.A. AND P.	50-16-5	DRG. 73-2-154
5			
6			

* THE SPECIFICATION NUMBERS SHOWN ARE BASIC NUMBERS ONLY. WHEN A SPECIFICATION IS REVISED A LETTER IS AFFIXED TO ITS BASIC NUMBER. SPECIFICATIONS REFERRED TO IN THESE SPECIFICATIONS, AND NOT LISTED HEREON, SHALL NOT APPLY.

LIST OF DRAWINGS

LINE NO.	LIST OF DRAWINGS	DRAWING NUMBER
1	FUZE, PD, M51A5 ASSEM.	73-2-146
2		
3		
4		
5	FUZE, PD, M48A3, ASSEMBLY	73-2-140
6		
7		
8		
9		
10		
11	BOOSTER, M21A4 ASSEMBLY	73-2-154
12		
13	CONTAINER, METAL	76-1-824
14	PACKING & MARKING OF CONTAINER	76-1-825
15	PACKING BOX	76-16-427
16	PACKING AND MARKING OF BOX	20-4-512
17		
18		

SUPERSEDES OLD TRACING 73-2-146
UNDER REVISION DATE OF AUGUST 19, 1944

FUZE, POINT DETONATING, M51A5. ASSEMBLY

JULY 10, 1939

REVISIONS

5	11-2-43
6	8-19-44
7	8-15-45
8	8-2-48
9	10-18-49

DRG. PERTAINS TO

CLASS	DIVISION	DRAWING	FILE
73	2	146	

TOLERANCE ON DIMENSIONS NOT OTHERWISE SPECIFIED
DECIMAL ±
FRACTIONAL ±
ANGULAR ±

DFTSMAN A.E.R. | TRACER RMS | ENGINEER

CHECKER X.H. | O.C. | PRINCIPAL ENGINEER

SUBMITTED: Mcgallagher LT. COL., ORD. DEPT. U.S.A.

EXAMINED: D.E. Woodbury LT. COL., ORD. DEPT. U.S.A.

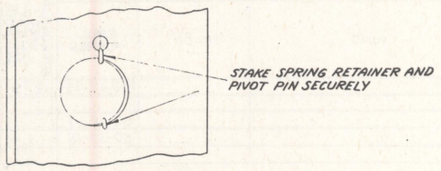
APPROVED BY ORDER OF THE CHIEF OF ORDNANCE: C.F. Hostetter COL., ORD. DEPT. U.S.A.

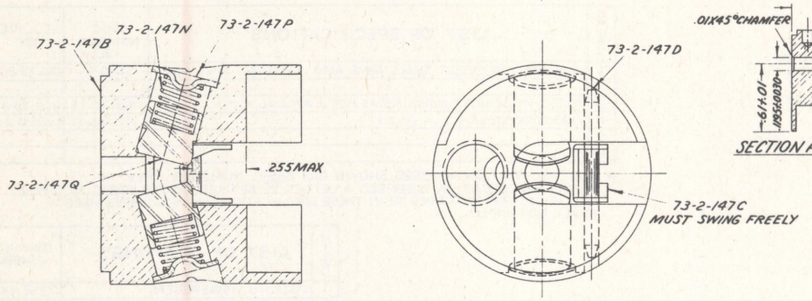
D

ORDNANCE DEPT., U.S.A.

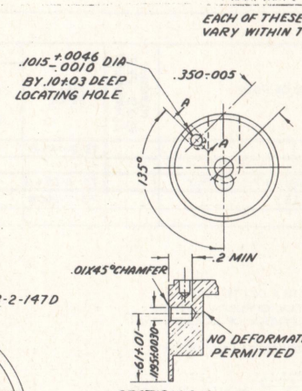
0 1 2 3 4 5 INCHES
0 1 2 INCHES

CL & DIV D

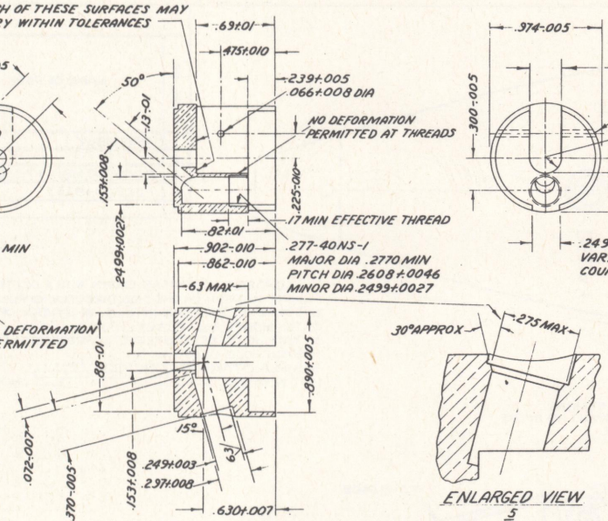




PLUNGER BODY ASSEMBLY 73-2-147M11

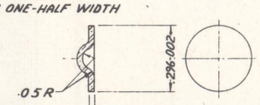


SECTION A-A

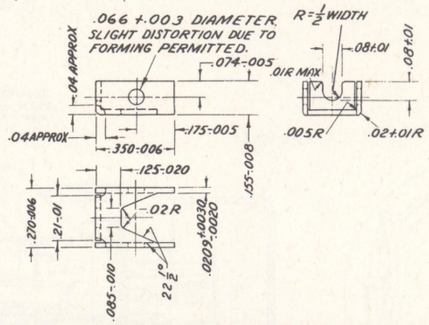


BODY, PLUNGER 73-2-147B12
COMMERCIAL BRASS, ROD, COMP "B", HALF-HARD.
125/ ALL OVER EXCEPT AS NOTED.

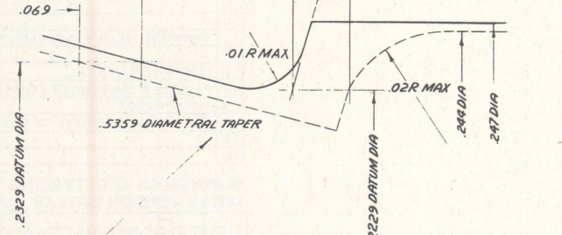
ENLARGED VIEW 5/1



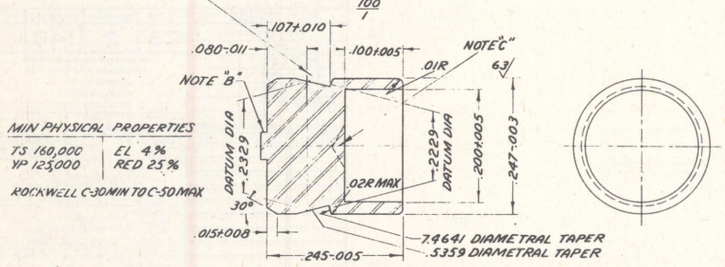
RETAINER, SPRING 73-2-147P12
GILDING METAL



LOCK, CENTRIFUGAL PLUNGER PIN 73-2-147C9
STEEL STRIP, WD 1010, COLD-ROLLED, TEMPER NO. 2 (HALF-HARD), FINISH NO. 3 (BEST BRIGHT)



ENLARGED VIEW (SHOWING LIMITS) .100/

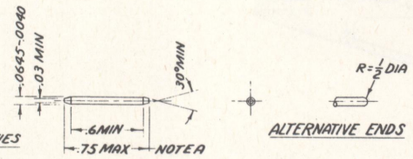


MIN PHYSICAL PROPERTIES

TS 160,000	EL 4%
YP 125,000	RED 25%

ROCKWELL C-30 MIN TO C-50 MAX

PIN, CENTRIFUGAL PLUNGER 73-2-147Q12
STEEL, CLASS 6, TYPE "E"
125/ ALL OVER EXCEPT AS NOTED.



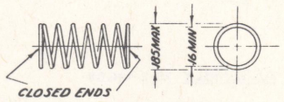
ALTERNATIVE ENDS

MIN PHYSICAL PROPERTIES

TS 65,000	EL 8.5%
YP 50,000	RED 40%

PIN, LOCK PIVOT 73-2-147D12
STEEL, FS1020, AS-COLD-FINISHED.
FINISH ALL OVER 125/

NOTES:-
A:-LENGTH INCLUDES PERMISSABLE CUT NIBS .005 MAX LENGTH BY .05 MAX DIA.
B:-CUT OFF NIB .01 MAX LENGTH X .05 MAX DIA PERMITTED. MUST NOT BE FRAGILE.
C:-STANDARD DRILL POINT RECESS .075 DIA MAX PERMITTED PROVIDED ARMING LIMITS ARE MET.



REQUIREMENTS
A-SOLID HEIGHT NOT OVER .1 INCH.
B-SEASON THOROUGHLY AFTER WINDING.
C-WITHIN 24 HOURS AFTER PLATING, TREAT TO REMOVE EMBRITTLEMENT.
D-MUST MEET ARMING LIMITS OF PLUNGER CENTRIFUGAL PINS AS SPECIFIED IN SPECIFICATION 50-45-3. (OCCASIONAL CHECK WILL BE MADE AFTER COMPRESSION FOR AT LEAST 24 HOURS AT THE ASSEMBLED HEIGHT).

ADVISORY DATA (MAY BE VARIED TO MEET REQUIREMENTS)
A-DIA OF WIRE = .008 INCH.
B-TOTAL NUMBER OF COILS = 8.
C-NUMBER OF ACTIVE COILS = 6.
D-LOAD AT .2 HEIGHT, 190 TO 240 GRAINS.
E-LOAD AT .1 HEIGHT, 430 GRAINS MAX.
F-LOAD APPLIES AFTER SEASONING, PLATING, AND TREATMENT TO REMOVE EMBRITTLEMENT.
G-SEASON BY HEATING TO 350°F FOR 30 MINUTES.
H-TO REMOVE EMBRITTLEMENT HEAT TO 300°F FOR AT LEAST 30 MINUTES AS SOON AFTER PLATING AS PRACTICABLE.
K-SPRING RATE PER ONE INCH DEFLECTION, 1200 GRAINS
L-MAX FREE HEIGHT .4 INCH.

SPRING, CENTRIFUGAL, PIN 73-2-147N10
STEEL, WIRE, MUSIC SPRING, COMPOSITION A.

NOTICE: THIS DRAWING SHALL NOT BE USED NOR REPRODUCED EITHER WHOLLY OR IN PART EXCEPT WHEN AUTHORIZED IN CONNECTION WITH UNITED STATES GOVERNMENT PROCUREMENT.

FOR ALTERNATIVE MATERIALS AND PROTECTIVE FINISHES SEE DWG 73-2-144A.

DELAY PLUNGER, M1. DETAILS.

73 2 147

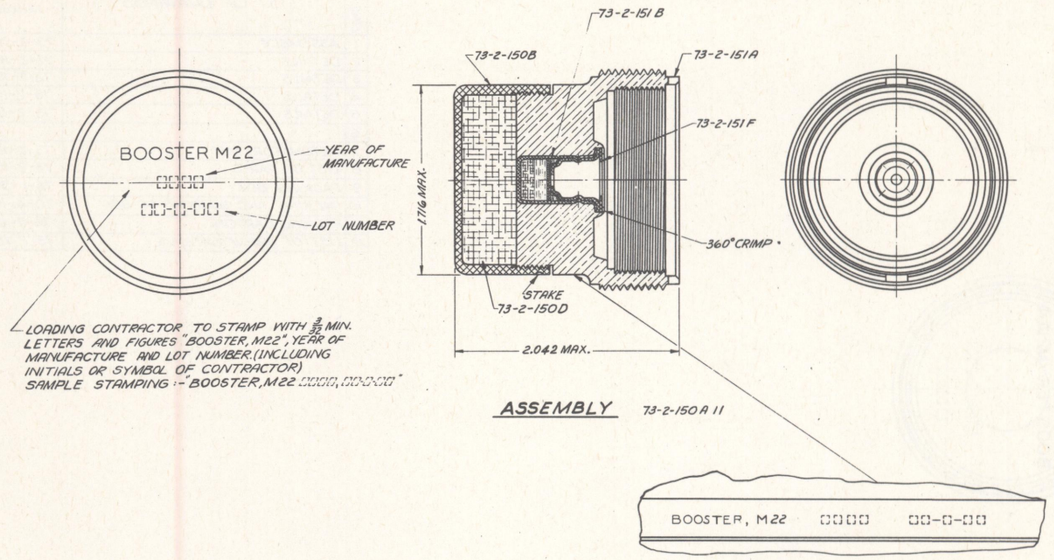
73-2-144

JULY 10, 1939

11 9-30-49
12 7-25-50 ECO-16174

SCALE, INCHES 2 1 0

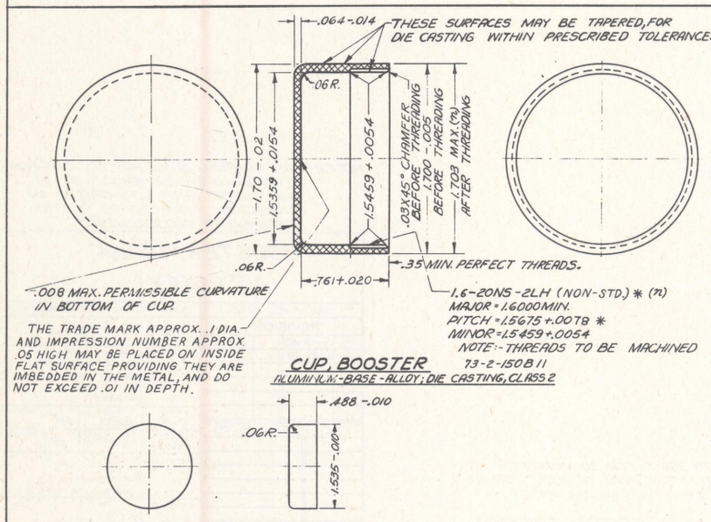
SUPERSEDES 73-2-147 WITH CHANGE, SEP 30, 1949.



LOADING CONTRACTOR TO STAMP WITH 1/16 MIN. LETTERS AND FIGURES "BOOSTER, M22", YEAR OF MANUFACTURE AND LOT NUMBER (INCLUDING INITIALS OR SYMBOL OF CONTRACTOR)
SAMPLE STAMPING :- BOOSTER, M22 □□□□, □□-□-□□"

ASSEMBLY 73-2-150 A 11

ALTERNATIVE MARKING
STAMP WITH 1/16 LETTERS AND FIGURES ON PERIPHERY OF BODY



CUP, BOOSTER 73-2-150 B 11
ALUMINUM:- BASE-ALLOY; DIE CASTING, CLASS 2

PELLET, BOOSTER 73-2-150 D 10
APPROX. 340 GRAINS (22 GRAMS) TETRYL
MAY CONTAIN NOT MORE THAN 2% GRAPHITE, GRADE "B"

ADVISORY DATA - PELLETING PRESSURE APPROX. 5000 LBS. PER SQ. IN.
SPECIFIC GRAVITY, ALL PLACES, 1.40 TO 1.55
300 GRAINS MINIMUM WEIGHT AS LOADED.

(n) -.010 MAX. ECCENTRICITY PERMITTED BETWEEN 1.6-20 NS-2 LH (NON-STD) * THREAD AND 1.703 MAX. OUTSIDE DIAMETER. WHEN MEASURING ECCENTRICITY BY MEANS OF A DIAL INDICATOR, THE TOTAL READING OF THE DIAL IS TWICE THE ECCENTRICITY.

LIST OF PARTS

LINE NO.	NAME OF PART	NUMBER REQ'D PER COMPONENT	PIECE-MARK	MATERIAL: SIZE OR FORM	MATERIAL: KIND	MATERIAL: GRADE	MATERIAL: SPEC. NUMBER	APPROXIMATE UNIT WEIGHT (GRAINS)	APPROX. GROSS WT. OF RAW STOCK PER 1000 ASSEMBLIES	REMARKS
1	ASSEMBLY		73-2-150A				50-16-8 50-47-8	.73 LB		
2	DETONATOR ASSEMBLY		73-2-151B							
3										
4										
5	BODY	1	73-2-151A	ROD	BRASS	"B" HALF HARD	QQ-B-611	4130.		(a)(c)(d)(e)(f)(h)
6	CASING, DETONATOR	1	73-2-151D	SHEET	ALUMINUM	CLASS "A"	QQ-A-561	13.7		
7	CHARGE, DETONATOR	1	73-2-151C		LEAD AZIDE		50-13-12	10.		
8	CUP, BOOSTER	1	73-2-150B	CASTING	ALUMINUM-BASE-ALLOY; DIE-CASTING	CLASS 2	QQ-A-591	282.		(f)
9	DISC	1	73-2-151H	BOLT	COTTON SHEETING	UNBLEACHED	CCC-S-291			
10										
11	DISC, RETAINER	1	73-2-151L		ALUMINUM FOIL		COMMERCIAL			
12	PELLET, BOOSTER	1	73-2-150D		TETRYL		50-13-4	340.		
13	PELLET, DETONATOR	1	73-2-151K		TETRYL		50-13-4	4.9		
14	RETAINER, DETONATOR	1	73-2151E	SHEET	ALUMINUM	CLASS "A"	QQ-A-561	11.6		
15	WASHER	1	73-2-151F	STRIP	BRASS	"C" HALF HARD	QQ-B-611			
16	WASHER, DETONATOR RETAINER	1	73-2-1516	ROLL	FELT	NO. 10	8-15			
17					GRAPHITE	B	50-11-41			
18					VARNISH, SHELLAC, ORANGE	MEDIUM BODY	TT-V-91			(b)

(a) ALTERNATIVE MATERIAL:- COMMERICAL BRASS, ROD OR FORGING, COMPOSITION "A" SPEC. QQ-B-611.
(b) 36.4% MIN. STICK LAC.
(c) ALTERNATIVE MATERIAL:- COMMERCIAL BRASS, PLASTER MOULD CASTING, COMPOSITION "B"; HALF HARD, SPEC. QQ-B-611, EXCEPT FOR PROCESS OF MANUFACTURE.
(d) ALTERNATIVE MATERIAL:- BRASS, HIGH PRESSURE DIE CASTING. (e)
(e) CHEMICAL COMPOSITIONS:

COPPER	58% TO 64%	ALUMINUM	.25% MAX.
LEAD	.5% TO 3%	TOTAL OTHER (EXCEPT ZINC)	.5% MAX.
TIN	1% MAX.	ZINC	REMAINDER
IRON	1% MAX.		

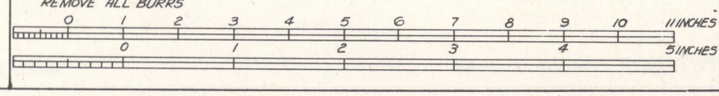
(f) ALTERNATIVES:- ALUMINUM-BASE-ALLOY, DIE-CASTING, CLASS 5, SPEC. AXS-679 OR ALUMINUM-BASE-ALLOY, DIE-CASTING, CLASS 1, SPEC. QQ-A-591 (EXCEPT THAT PART MUST BE PRODUCED BY COLD CHAMBER PROCESS IF CLASS 1, ALLOY IS USED).
(g) ALTERNATIVE MATERIAL:- MALLEABLE IRON CASTING, GRADE "A" OR "B"; SPEC. QQ-I-666. (Pa)
(h) ALTERNATIVE MATERIAL:- STEEL, WDX-1314, SPEC. 57-107. (Pa) (Pb)
(P) PROTECTIVE FINISHES (SPEC. 57-0-2):
(Pa) TYPE I, CLASS T5 OR R5C; TYPE II, CLASS B; OR TYPE III, CLASS A, GRADE 2 OR 3.
(Pb) TYPE I, CLASS R5.

LIST OF SPECIFICATIONS

LINE NO.		SPEC. NUMBER *	REQUIRED BY
1	ALUMINUM; PLATES AND SHAPES	QQ-A-561	DRG. 73-2-151
2	ALUMINUM-BASE-ALLOY; DIE-CASTING	QQ-A-591 OR AXS-679	DRG. 73-2-150
3	AMMUNITION, EXCEPT SMALL ARMS AMMUNITION, GENERAL SPEC. FOR	50-0-1	50-16-8 50-47-8
4	BOOSTER, M22, LOADING, ASSEMBLING, AND PACKING	50-16-8	DRG. 73-2-150
5	BRASS, COMMERCIAL; BARS, PLATES, RODS, SHAPES, ETC.	QQ-B-611	DRG. 73-2-151
6	IRON, MALLEABLE; CASTINGS	QQ-I-666	DRG. 73-2-150
7	FELT, PRESSED	8-15	DRG. 73-2-151
8	BOOSTER, M22, METAL PARTS FOR	50-47-8	DRG. 73-2-150
9	GRAPHITE	50-11-41	DRG. 73-2-151
10	FINISHES, PROTECTIVE, FOR IRON AND STEEL PARTS	57-0-2	DRG. 73-2-150
11	LEAD AZIDE	50-13-12	DRG. 73-2-151
12	METALS, GENERAL SPECIFICATION FOR INSPECTION OF	QQ-M-151	57-107
13			
14			
15			
16	SHEETING; COTTON, UNBLEACHED, WIDE	CCC-S-291	DRG. 73-2-151
17	STEEL BARS, CARBON AND ALLOY	57-107	DRG. 73-2-150
18	TETRYL	50-13-4	DRG. 73-2-150
19			
20	VARNISH, SHELLAC	TT-V-91	DRG. 73-2-151
21			
22			

* THE SPECIFICATION NUMBERS SHOWN ARE BASIC NUMBERS ONLY. WHEN A SPECIFICATION IS REVISED A LETTER IS AFFIXED TO ITS BASIC NUMBER. SPECIFICATIONS REFERRED TO IN THESE SPECIFICATIONS AND NOT LISTED HEREON, SHALL NOT APPLY.

REMOVE ALL BURRS



LIST OF DRAWINGS

LINE NO.		DRAWING NUMBER
1	ASSEMBLY	73-2-150
2	DETAILS	73-2-151
3	PACKING BOX	76-1-555
4	PACKING AND MARKING OF BOX	20-4-194
5	PACKING CARTON	76-7-644

SUPERSEDES OLD TRACING 73-2-150, UNDER REVISION DATE OF JUNE 22, 1944

BOOSTER, M22 ASSEMBLY AND DETAILS

NOV. 23, 1937

CLASS	DIVISION	DRAWING	FILE
73	2	150	

REVISIONS

9	2-15-43			
10	6-22-44			
11	8-15-45			

TOLERANCE ON DIMENSIONS NOT OTHERWISE SPECIFIED
DECIMAL ±
FRACTIONAL ±
ANGULAR ±

DFTSMAN W.M.R. | TRACER B.J.N. | ENGINEER | PRINCIPAL ENGINEER

CHECKER J.B.

DRG. PERTAINS TO

SUBMITTED: A.M. Gallagher LT. COL. ORD. DEPT. U.S.A.

EXAMINED: F.R. Woodbury LT. COL. ORD. DEPT. U.S.A.

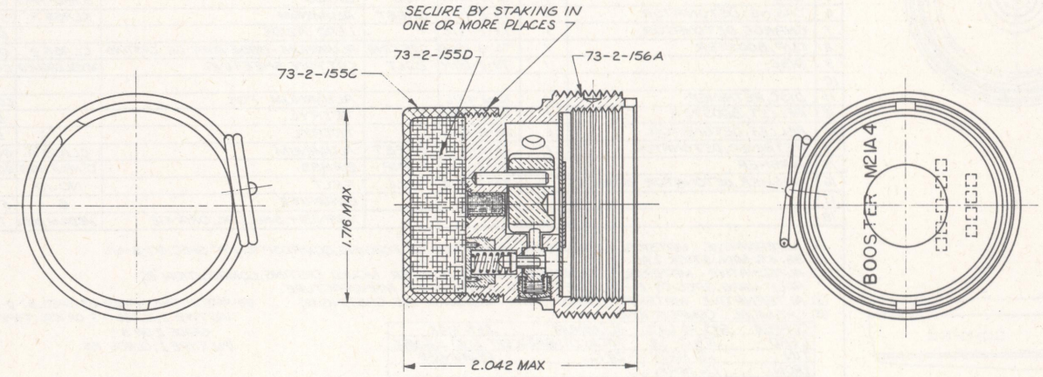
APPROVED BY ORDER OF THE CHIEF OF ORDNANCE: C.S. Ford Maj. COL. ORD. DEPT. U.S.A.

D

ORDNANCE DEPT., U.S.A.

HEAT TREATMENT AND FINAL FINISH

LINE NO.	LIST OF DRAWINGS	DRAWING NUMBER
1	ASSEMBLY	73-2-154
2	DETAILS	73-2-155
3	DETAILS	73-2-156
4	DETAILS	73-2-113
5	DETAILS	73-2-114
6		
7	DETONATOR, M17	73-2-184
8	LIST OF PARTS	73-2-154A
9	PACKING BOX	76-1-555
10	PACKING AND MARKING OF BOX	20-4-194
11	PACKING CARTON	76-7-644
12	LIST OF SPECIFICATIONS	73-2-154B



ASSEMBLY 73-2-154A19

SUPERSEDES 73-2-154 WITHOUT CHANGE 9-21-48

0 1 2 3 4 5 IN.

NOTICE: THIS DRAWING SHALL NOT BE USED NOR REPRODUCED EITHER WHOLLY OR IN PART EXCEPT WHEN AUTHORIZED IN CONNECTION WITH UNITED STATES GOVERNMENT PROCUREMENT.

BOOSTER, M21A4
ASSEMBLY

JULY 15, 1938

REVISIONS	
18	8-15-45
19	9-21-48

DRG. PERTAINS TO

CLASS	DIVISION	DRAWING	FILE
73	2	154	

TOLERANCE ON DIMENSIONS NOT OTHERWISE SPECIFIED
DECIMAL ±
FRACTIONAL ±
ANGULAR ±

D'FTSMAN	TRACER	ENGINEER
S.K.	REG	

CHECKER	ENGINEER
A.C.J.	

SUBMITTED:
J.C. Berman
ORD ENG, ORD. DEPT. U.S.A.

EXAMINED:
C.R. Dalton
COL, ORD. DEPT. U.S.A.

APPROVED BY ORDER OF THE CHIEF OF ORDNANCE:
J.B. Hamb
COL, ORD. DEPT. U.S.A.

D

ORDNANCE DEPT., U.S.A.

LIST OF PARTS

LINE NO	NAME OF PART	NUMBER REQD PER COMPONENT	PIECEMARK	MATERIAL: SIZE OR FORM	MATERIAL: KIND	MATERIAL: GRADE	MATERIAL: SPEC NUMBER	APPROX UNIT WEIGHT (GRAINS)	APPROX GROSS WT OF RAW STOCK PER 1000 ASSEMBLIES		REMARKS
1	ASSEMBLY		73-2-154A				50-16-5 50-47-3	.73 LB			
2	BODY ASSEMBLY	1	73-2-156A								
3	CUP, BOOSTER	1	73-2-155C	CASTING	ALUMINUM-BASE-ALLOY, DIE CASTING	CLASS 2	QQ-A-591	282.			(h)
4	PELLET, BOOSTER	1	73-2-155D		TETRYL	I, CLASS a	JAN-T-339	340.			
5											
6	BODY ASSEMBLY		73-2-156A								
7	BODY METAL PARTS ASSEMBLY	1	73-2-156K								
8	BODY METAL PARTS ASSEMBLY (ALT)		73-2-156N								
9	BOOSTER CLOSING CUP ASSEMBLY	1	73-2-155A								
10	COVER AND DISC ASSEMBLY	1	73-2-156L								
11	RING AND PIN ASSEMBLY	1	73-2-156M								
12	ROTOR ASSEMBLY	1	73-2-113A								
13	LOCK, ROTOR LOCK PIN	1	73-2-113L	ROD	BRASS	B, HALF-HARD	QQ-B-611	1.7			(3)
14	PIN, ROTOR LOCK	1	73-2-113M	ROD	BRASS	B, HALF-HARD	QQ-B-611	2.7			(3)
15											
16	BODY METAL PARTS ASSEMBLY		73-2-156K								
17	BODY	1	73-2-114B	ROD	BRASS	B, HALF-HARD	QQ-B-611	3800.			(b)(k)(e)(u)
18	PIN, CENTRIFUGAL	1	73-2-114C	ROD	BRASS	B, HALF-HARD	QQ-B-611	21.6			
19	PIN, CENTRIFUGAL PIN LOCK	1	73-2-114E	ROD	BRASS	B, HALF-HARD	QQ-B-611	7.3			
20	PIN, ROTOR PIVOT	1	73-2-155F	ROD	STEEL	FS 1020 OR FSX 1020	QQ-S-671	13.			(x)(pa)
21	PIN, ROTOR PIVOT (ALT)		73-2-155P	ROD	STEEL	FS 1020 OR FSX 1020	QQ-S-671	13.			(x)(pa)
22	PIN, ROTOR STOP	1	73-2-155G	ROD	STEEL	FS 1020 OR FSX 1020	QQ-S-671	7.4			(pa)(pb)(pc)
23	PIN, ROTOR STOP (ALT)		73-2-155Q	ROD	STEEL	FS 1020 OR FSX 1020	QQ-S-671	7.4			(pa)(pb)(pc)
24	PLUG, BODY	1	73-2-113R	STRIP	BRASS	C OR E HARD	QQ-B-611	1.8			(t)(d)
25	PLUG, BODY (ALT)		73-2-113C	STRIP	BRASS	C OR E HARD	QQ-B-611	3.			(t)(d)(s)
26	SCREW, CENTRIFUGAL PIN	1	73-2-155K	ROD	BRASS	B, HALF-HARD	QQ-B-611	15.2			(w)(u)(g)
27	SCREW, LOCK PIN CLOSING	1	73-2-114F	ROD	BRASS	B, HALF-HARD	QQ-B-611	56.			(w)(u)(g)
28	SCREW, LOCK PIN CLOSING (ALT)		73-2-114G	ROD	BRASS	B, HALF-HARD	QQ-B-611	56.			(w)(u)(g)
29	SPRING, CENTRIFUGAL PIN	1	73-2-113Q	WIRE	MUSIC	COMP A	QQ-W-470	.30			(pa)(pb)
30	SPRING, CENTRIFUGAL PIN LOCK PIN	1	73-2-114D	WIRE	MUSIC	COMP A	QQ-W-470	1.			(pa)(pb)
31											
32											
33	BODY METAL PARTS ASSEMBLY (ALT)		73-2-156N								
34	BODY (ALT)	1	73-2-114A	ROD	BRASS	B, HALF-HARD	QQ-B-611	3875.			(b)(k)(e)(s)
35	PIN, CENTRIFUGAL	1	73-2-114C	ROD	BRASS	B, HALF-HARD	QQ-B-611	21.6			
36	PIN, CENTRIFUGAL PIN LOCK	1	73-2-114E	ROD	BRASS	B, HALF-HARD	QQ-B-611	7.3			
37	PIN, ROTOR PIVOT	1	73-2-155F	ROD	STEEL	FS 1020 OR FSX 1020	QQ-S-671	13.			(x)(pa)
38	PIN, ROTOR PIVOT (ALT)		73-2-155P	ROD	STEEL	FS 1020 OR FSX 1020	QQ-S-671	13.			(x)(pa)
39	PIN, ROTOR STOP	1	73-2-155G	ROD	STEEL	FS 1020 OR FSX 1020	QQ-S-671	7.4			(pa)(pb)(pc)
40	PIN, ROTOR STOP (ALT)		73-2-155Q	ROD	STEEL	FS 1020 OR FSX 1020	QQ-S-671	7.4			(pa)(pb)(pc)
41	PLUG, BODY	1	73-2-113R	STRIP	BRASS	C OR E HARD	QQ-B-611	1.8			(t)(d)
42	PLUG, BODY (ALT)	2 OR 3	73-2-113C	STRIP	BRASS	C OR E HARD	QQ-B-611	3.			(t)(d)(s)
43	SPRING, CENTRIFUGAL PIN	1	73-2-113Q	WIRE	MUSIC	COMP A	QQ-W-470	.30			(pa)(pb)
44	SPRING, CENTRIFUGAL PIN LOCK PIN	1	73-2-114D	WIRE	MUSIC	COMP A	QQ-W-470	1.			(pa)(pb)
45											
46											
47	BOOSTER CLOSING CUP ASSEMBLY		73-2-155A					7.05			
48	CHARGE, BOOSTER CLOSING CUP	1	73-2-155B		TETRYL	I, CLASS a	JAN-T-339	3.25			
49	CUP, BOOSTER CLOSING	1	73-2-155L	SHEET	GILDING METAL		JAN-G-439	3.8			
50											
51											
52	COVER AND DISC ASSEMBLY		73-2-156L								
53	COVER, ROTOR	1	73-2-113P	STRIP	BRASS	C OR E HARD	QQ-B-611	130.6			(y)
54	DISC, ROTOR COVER	1	73-2-155H	SHEET	ONIONSKIN PAPER		JAN-P-157	.20			
55											
56											
57	RING AND PIN ASSEMBLY		73-2-156M								
58	PIN, COTTER	1	73-2-156E	WIRE	BRASS		COMMERCIAL	11.			
59	RING	1	73-2-156D	WIRE	STEEL	WD 1020	48-5	56.			(r)(pa)(pb)(pd)
60											
61											
62											
63											
64											
65											

SUPERSEDES 73-2-154A WITHOUT CHANGE 9-21-48

LIST OF PARTS

LINE NO	NAME OF PART	NUMBER REQD PER COMPONENT	PIECEMARK	MATERIAL: SIZE OR FORM	MATERIAL: KIND	MATERIAL: GRADE	MATERIAL: SPEC NUMBER	APPROX UNIT WEIGHT (GRAINS)	APPROX GROSS WT OF RAW STOCK PER 1000 ASSEMBLIES		REMARKS
66	ROTOR ASSEMBLY		73-2-113A					3549.			
67	DETONATOR ASSEMBLY, M17	1	73-2-184AB					10.			
68	CUSHION, DETONATOR	1	73-2-113K	SHEET	COMPRESSED CORK		COMMERCIAL	.10			
69	ROTOR	1	73-2-113B	SHAPE	BRASS	A	QQ-B-611	345.			(a)(b)(t)(w)(3)
70											
71											
72					VARNISH, SHELLAC, ORANGE	MEDIUM BODY	TT-V-91				(c)(n)
73					GRAPHITE	I OR II	JAN-G-155				(aa)
74											
75											
76											

(a)- ALTERNATIVE MATERIAL :- COMMERCIAL BRASS, ROD OR SHAPE, COMPOSITION B OR D, HALF-HARD, SPEC QQ-B-611.
(b) -ALTERNATIVE MATERIAL :—COMMERCIAL BRASS, ROD OR FORGING, COMPOSITION A, SPEC QQ-B-611.
(c)-36.4% MIN STICK LAC.
(d)- ALTERNATIVE MATERIAL :- STEEL, WD 1010, SPEC 57-136 (pa)(pb)(pc).
(e)-ALTERNATIVE MATERIAL: — COMMERCIAL BRASS, PLASTER MOLD CASTING, COMPOSITION B, HALF-HARD, SPEC QQ-B-611, EXCEPT FOR PROCESS OF MANUFACTURE.
(f)- ALTERNATIVE MATERIAL :- POWDERED BRASS, COMMERCIAL.
CHEMICAL COMPOSITION

COPPER	70.0 % ± 1.5 %	TIN	.10 % MAX
LEAD	.25% MAX	IRON	.25 % MAX
NICKEL	.10 % MAX	ANTIMONY	.10 % MAX
ZINC	BALANCE		

SPECIFIC GRAVITY 7.7 MIN
(g)- ALTERNATIVE MATERIAL :- STEEL, FS 1020, SPEC QQ-S-671
FINISH : FOR 73-2-114F AND 73-2-114G (pa)(pb)(pc).
FINISH : FOR 73-2-155K (pa)
(h)-ALTERNATIVE MATERIAL :- ALUMINUM BASE ALLOY, DIE CASTING, CLASS 5, SPEC AXS-679 OR ALUMINUM-BASE-ALLOY DIE CASTING, CLASS I, SPEC QQ-A-591 (EXCEPT THAT PART MUST BE PRODUCED BY COLD CHAMBER PROCESS IF CLASS I ALLOY IS USED).
(k)- ALTERNATIVE MATERIAL :- BRASS, HIGH PRESSURE DIE CASTING DIE CASTING COMPOSITION

COPPER	58 % TO 64 %
LEAD	.75 % TO 3 %
TIN	1. % MAX
IRON	1. % MAX
ALUMINUM	.25% MAX
TOTAL OTHER (EXCEPT ZINC)	.5% MAX
ZINC	BALANCE

(n)-ALTERNATIVE MATERIAL :- LACQUER, NITROCELLUOSE, CLASS A, SPEC 3-158
(p)- PROTECTIVE FINISHES (SPEC 57-0-2)
(pa) TYPE I, CLASS TS OR RSC
(pb) TYPE I, CLASS RS
(pc) TYPE II, CLASS B, OR TYPE III, CLASS A, GRADE 2 OR 3.
(pd) TIN PLATE OR GALVANIZED (TO MEET 24 HOUR SALT SPRAY TEST WITHOUT FORMATION OF RED RUST).
(pe) NICKEL PLATE OR SUBJECT TO CHROMATE TREATMENT (TO MEET 24 HOUR SALT SPRAY TEST WITHOUT DISINTEGRATION OF PLATING OR FORMATION OF WHITE SALTS)
(r)- ALTERNATIVE MATERIAL :- STEEL WIRE, WD 1010 OR WDX 1112, SPEC 48-5 (pa)(pb)(pd).
(s)-USED ON BODY (ALT) 73-2-156N
(t)- PIECEMARK 73-2-113C MAY BE USED IN LIEU OF PIECEMARK 73-2-113R PROVIDED COUNTERBORE IS ENLARGED AS INDICATED ON BODY, PIECEMARK 73-2-114B.
(u)-USED ONLY ON BODY ASSEMBLY 73-2-156K.
(w)- ALTERNATIVE MATERIAL :- MAY BE ZINC ALLOY DIE CASTING CLASS A, SPEC QQ-Z-363 (pe) OR MAY BE MACHINED FROM ZINC ALLOY ROD MEETING PHYSICAL AND CHEMICAL REQUIREMENTS OF CLASS A ALLOY, SPEC QQ-Z-363 (pe) (PROTECTIVE FINISH MANDATORY ON PIECEMARK 73-2-155K ONLY).
(x)- ALTERNATIVE MATERIALS:- CORROSION RESISTING STEELS (CLASS I, TYPE C), (CLASS 7, TYPE B AND (CLASS 9, TYPE C), SPEC QQ-S-763. (bb)
(y)- ALTERNATIVE MATERIAL :- STEEL WD 1010, TEMPER NO. 4 OR NO. 5, SPEC 57-136 (pa)
(3)- ALTERNATIVE MATERIAL :- WIRE, BRASS, GRADE B, HALF-HARD, SPEC QQ-W-321.
(aa)- ALTERNATIVE MATERIAL :- BARIUM STEARATE, SPEC JAN-B-366; AND CALCIUM STEARATE, SPEC JAN-C-263.
(bb) NO PROTECTIVE FINISH REQUIRED.

NOTICE : THIS DRAWING SHALL NOT BE USED NOR REPRODUCED EITHER WHOLLY OR IN PART EXCEPT WHEN AUTHORIZED IN CONNECTION WITH UNITED STATES GOVERNMENT PROCUREMENT.

BOOSTER, M21A4
LIST OF PARTS

FEBRUARY 1, 1945

REVISIONS			
1	8-15-45		
2	9-21-48		

CLASS	DIVISION	DRAWING	FILE
73	2	154A	

TOLERANCE ON DIMENSIONS NOT OTHERWISE SPECIFIED
DECIMAL ±
FRACTIONAL ±
ANGULAR ±

D'FTSMAN	TRACER		ENGINEER
H.R.	REG	[illegible]	
CHECKER			ENGINEER
A.C.J.			

DRG. PERTAINS TO

SUBMITTED:-
D.K. Beeman
ORD. ENG., ORD. DEPT., U.S.A.

EXAMINED:-
C.R. Dutton
COL., ORD. DEPT., U.S.A.

APPROVED BY ORDER OF THE CHIEF OF ORDNANCE:-
J.H. Stevens
COL., ORD. DEPT., U.S.A.

D

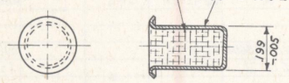
ORDNANCE DEPT., U.S.A.

CHARGE, BOOSTER CLOSING CUP 73-2-155 B18

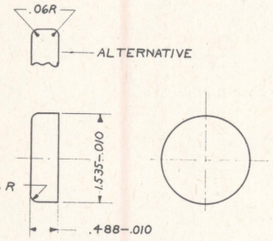
APPROX 3.25 GRAINS (210 MILLIGRAMS) TETRYL, GRADE I, CLASS "a"

MAY CONTAIN NOT MORE THAN 2% GRAPHITE, GRADE I OR II

PRESS TO A SPECIFIC GRAVITY OF 1.55 TO 1.65 THROUGHOUT. TO BE FLUSH WITHIN ± .01 INCH (ADVISORY)



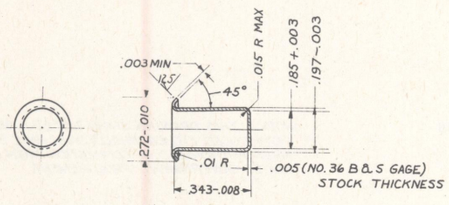
BOOSTER CLOSING CUP ASSEMBLY 73-2-155 A18



PELLET, BOOSTER 73-2-155 D17

APPROX 340 GRAINS (22 GRAMS) TETRYL, GRADE I, CLASS "a"

MAY CONTAIN NOT MORE THAN 2% GRAPHITE GRADE I OR II, AND/OR BARIUM OR CALCIUM STEARATE. SPECIFIC GRAVITY, ALL PLACES 1.45 TO 1.60.

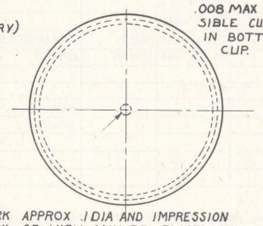


CUP, BOOSTER CLOSING 73-2-155 L16

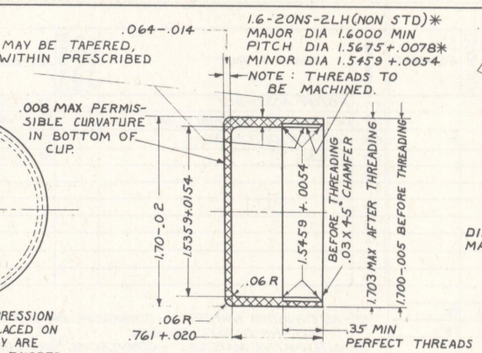
GILDING METAL

AFTER ALL FORMING AND DEBURRING OPERATIONS ARE COMPLETE, SEASON FOR ONE HOUR AT 400°F TO 625°F.

THESE SURFACES MAY BE TAPERED, FOR DIECASTING, WITHIN PRESCRIBED TOLERANCES.

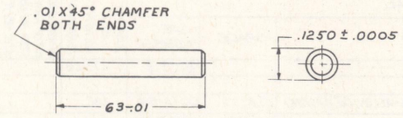


THE TRADE MARK APPROX .1 DIA AND IMPRESSION NUMBER APPROX .05 HIGH MAY BE PLACED ON INSIDE FLAT SURFACE PROVIDING THEY ARE IMBEDDED IN THE METAL, AND DO NOT EXCEED .01 IN DEPTH. .010 MAX ECCENTRICITY PERMITTED BETWEEN 1.6-20NS-2LH (NON STD) THREAD AND 1.703 MAX OUTSIDE DIAMETER. WHEN MEASURING ECCENTRICITY BY MEANS OF A DIAL INDICATOR, THE TOTAL READING OF THE DIAL IS TWICE THE ECCENTRICITY.



CUP, BOOSTER 73-2-155 C18

ALUMINUM-BASE-ALLOY, DIE-CASTING, CLASS 2



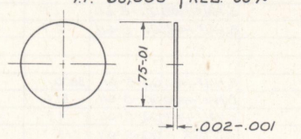
PIN, ROTOR PIVOT 73-2-155 F18

STEEL, FS 1020 OR FSX 1020

FINISH 125

DIMENSIONS APPLY BEFORE PLATING
MAX THICKNESS OF PLATING .0005

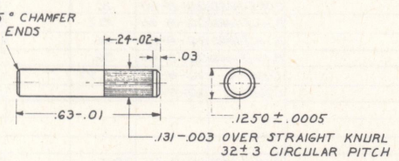
MIN PHYSICAL PROPERTIES	
T.S. 75,000	EL. 8%
Y.P. 65,000	RED. 30%



DISC, ROTOR COVER 73-2-155 H

ONION SKIN PAPER

DIAMETER DIMENSION CONTROLS TOOL MANUFACTURE



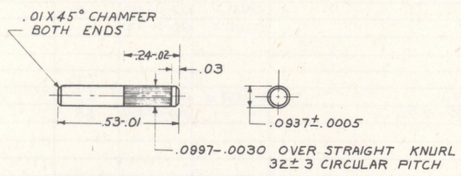
PIN, ROTOR PIVOT (ALTERNATIVE) 73-2-155 P18

STEEL, FS 1020 OR FSX 1020

FINISH 125

DIMENSIONS APPLY BEFORE PLATING
MAX THICKNESS OF PLATING .0005

MIN PHYSICAL PROPERTIES	
T.S. 75,000	EL. 8%
Y.P. 65,000	RED. 30%



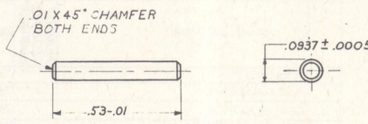
PIN, ROTOR STOP (ALTERNATIVE) 73-2-155 Q18

STEEL, FS 1020 OR FSX 1020

FINISH 125

DIMENSIONS APPLY BEFORE PLATING
MAX THICKNESS OF PLATING .0005

MIN PHYSICAL PROPERTIES	
T.S. 75,000	EL. 8%
Y.P. 65,000	RED. 30%



PIN, ROTOR STOP 73-2-155 G18

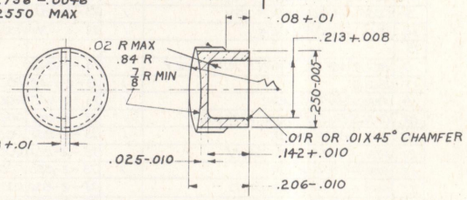
STEEL, FS 1020 OR FSX 1020

FINISH 125

DIMENSIONS APPLY BEFORE PLATING
MAX THICKNESS OF PLATING .0005

MIN PHYSICAL PROPERTIES	
T.S. 75,000	EL. 8%
Y.P. 65,000	RED. 30%

.3-28NS-1
MAJOR DIA .2988-.0086
PITCH DIA .2756-.0046
MINOR DIA .2550 MAX



SCREW, CENTRIFUGAL PIN 73-2-155 K18

COMMERCIAL BRASS, ROD, COMPOSITION "B", HALF HARD

FINISH 125

SEE DRAWING 73-2-154A FOR PROTECTIVE FINISHES AND ALTERNATIVE MATERIALS

NOTICE: THIS DRAWING SHALL NOT BE USED NOR REPRODUCED EITHER WHOLLY OR IN PART EXCEPT WHEN AUTHORIZED IN CONNECTION WITH UNITED STATES GOVERNMENT PROCUREMENT.

SUPERSEDES 73-2-155 WITHOUT CHANGE 9-21-48

REMOVE ALL BURRS

SCALES, 1/1, 2/1, 4/1

BOOSTER M2IA4 DETAILS

JULY 15, 1938	CLASS	DIVISION	DRAWING	FILE
REVISIONS	73	2	155	

17 8-15-45
18 9-21-48

TOLERANCE ON DIMENSIONS NOT OTHERWISE SPECIFIED
DECIMAL ±
FRACTIONAL ±
ANGULAR ±

DFTSMAN	TRACER	ENGINEER
A.K.S.	FCB	scp

CHECKER	ENGINEER
A.C.J.	CDY

DRG. PERTAINS TO

SUBMITTED:
J.T.C. Benson
ORD. LIAISON ORD. DEPT. U.S.A.

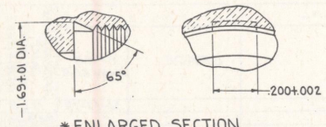
EXAMINED:
C.R. Dutton
COL, ORD. DEPT. U.S.A.

APPROVED BY ORDER OF THE CHIEF OF ORDNANCE:
J.H. Hamb
COL, ORD. DEPT. U.S.A.

73-2-154

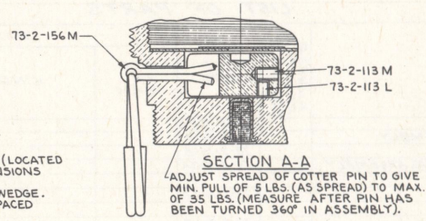
D

ORDNANCE DEPT., U.S.A.



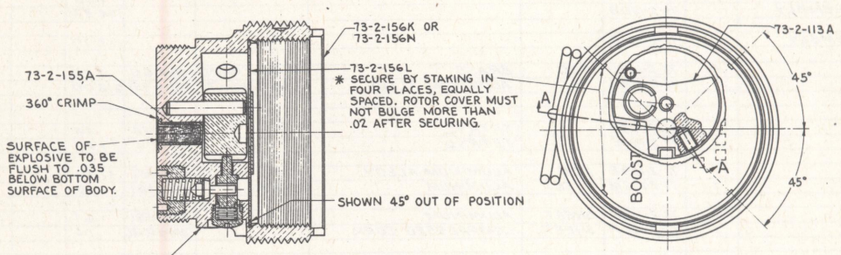
* ENLARGED SECTION

SHOWING 4 EQUALLY SPACED STAKING CAVITIES IN BODY (LOCATED 45° FROM CENTERLINE) FOR SECURING ROTOR COVER. (DIMENSIONS AND PRESENCE OF CAVITIES, ADVISORY ONLY).
ALTERNATIVE METHOD OF SECURING ROTOR COVER:- 360° SWEDGE. SWEDGE MAY BE INTERRUPTED BY THREE TO SIX EQUALLY SPACED ARCS NOT EXCEEDING 10° EACH.



SECTION A-A

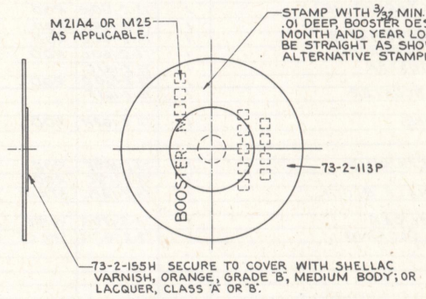
ADJUST SPREAD OF COTTER PIN TO GIVE MIN. PULL OF 5 LBS. (AS SPREAD) TO MAX. OF 35 LBS. (MEASURE AFTER PIN HAS BEEN TURNED 360° IN ASSEMBLY).



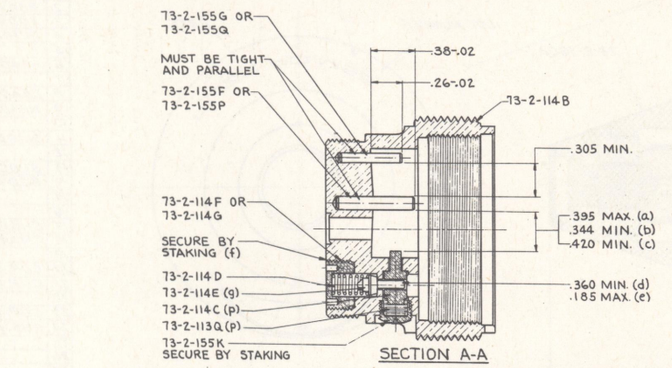
BODY ASSEMBLY 73-2-156A15

ALTERNATIVE STAMPING:- STAMP WITH 1/16 LETTERS AND FIGURES ON 1.70-.01 DIA. PERIPHERY OF BODY. SEE 73-2-156L FOR DATA TO BE STAMPED.

RING 73-11-156D11
STEEL WIRE, WD1020



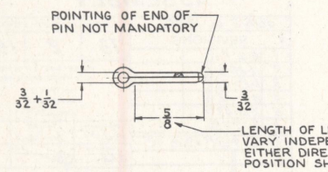
COVER AND DISC ASSEMBLY 73-2-156L15



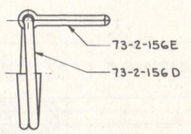
SECTION A-A

BODY METAL PARTS ASSEMBLY 73-2-156K15

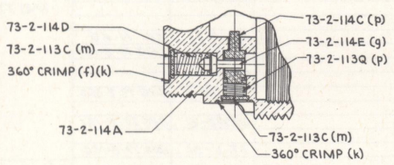
NOTES:-
(a) DIMENSION APPLIES WITH CENTRIFUGAL PIN MOVED TO EXTREME POSITION FROM ROTOR PIVOT PIN, AFTER ASSEMBLY OF CENTRIFUGAL PIN LOCK PIN.
(b) DIMENSION APPLIES WITH PIN 73-2-114C IN THE NORMAL POSITION.
(c) DIMENSION APPLIES WITH PIN 73-2-114C MOVED TO EXTREME POSITION FROM PIN 73-2-155F OR 73-2-155P BEFORE ASSEMBLY OF PIN 73-2-114E (OR WITH PIN 73-2-114E LOCKED UNDER WEB IN BODY.
(d) DIMENSION APPLIES WITH 20 OUNCE LOAD DEPRESSING PIN 73-2-114E.
(e) DIMENSION APPLIES WITH 8½ OUNCE LOAD DEPRESSING PIN 73-2-114E.
(f) PLUG AND ALL PARTS OF CRIMP OR STAKE MUST BE FLUSH WITH OR BELOW BOTTOM SURFACE OF BODY.
(g) PIN MUST BE CAPABLE OF LOCKING UNDER SHOULDER WHEN DEPRESSED AND MOVED AWAY FROM AXIS OF BODY.
(h) PLUG MUST NOT LOOSEN OR FALL OUT WHEN 12 POUNDS TOTAL LOAD IS APPLIED TO INNER SURFACE.
(k) DISC MUST BE TIGHT.
(m) SHOULD EITHER OF THESE PLUGS BE REMOVED FOR ANY REASON, BOTH PARTS MUST BE REPLACED BY SCREW PLUGS AS SHOWN ON 73-2-156A. BODY, 73-2-114A, TO BE DRILLED AND TAPPED AS SHOWN ON 73-2-114B.
(n) AN ALTERNATIVE PIN ONCE SEATED MAY NOT BE REPLACED.
(p) ARMING REQUIREMENTS OF CENTRIFUGAL PIN:-
MUST NOT ARM AT 1500 R.P.M.
MUST ARM AT 2000 R.P.M.



PIN, COTTER 73-2-156E13
BRASS, COMMERCIAL



RING AND PIN ASSEMBLY 73-2-156M15



BODY METAL PARTS ASSEMBLY (ALT.) 73-2-156N15
FOR ALL OTHER INFORMATION SEE 73-2-156K

SCALE: 2/1

PHYSICAL PROPERTIES	
Y.P.	
T.S.	
EL. 2	
RED.	
BR.	
ROCK.	

SEE DRAWING 73-2-154A FOR PROTECTIVE FINISHES AND ALTERNATIVE MATERIALS.

SUPERSEDES 73-2-156
WITH CHANGE AUGUST 15, 1945

BOOSTER, M21A4 DETAILS

JULY 15, 1938

REVISIONS		
15	8-15-45	

DRG. PERTAINS TO

CLASS	DIVISION	DRAWING	FILE
73	2	156	

TOLERANCE ON DIMENSIONS NOT OTHERWISE SPECIFIED
DECIMAL ±
FRACTIONAL ±
ANGULAR ±

DFTSMAN	TRACER	ENGINEER
H.R.	H.R.	

CHECKER H.R. — HEAD ENGINEER E.P.H.G.

SUBMITTED:- E.P.H. Rasmussen, ORD. DEPT. U.S.A.

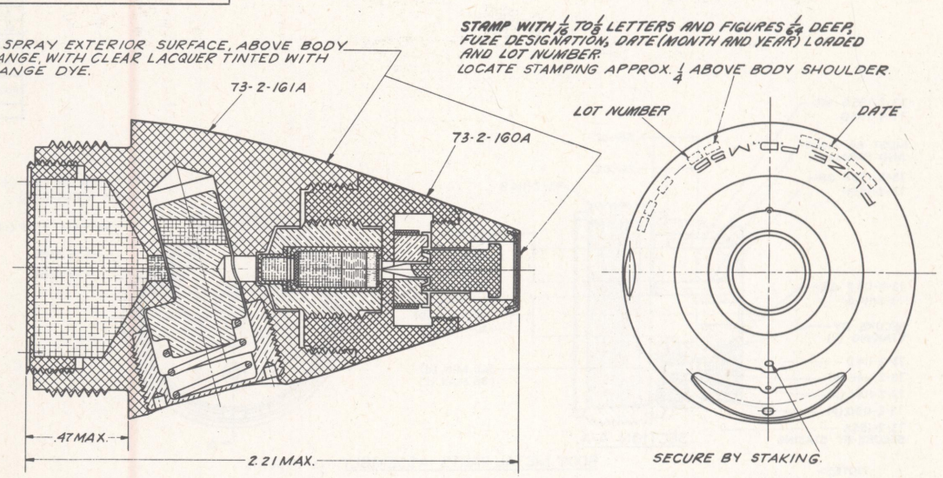
EXAMINED:- R.E. Hanford, ORD. DEPT. U.S.A.

APPROVED BY ORDER OF THE CHIEF OF ORDNANCE:- A. Adelman, ORD. DEPT. U.S.A.

D

ORDNANCE DEPT., U.S.A.

HEAT TREATMENT AND FINAL FINISH



ASSEMBLY 73-2-158 A6

LIST OF PARTS

LINE NO.	NAME OF PART	NUMBER REQ'D. PER COMPONENT	PIECE-MARK	MATERIAL: SIZE OR FORM	MATERIAL: KIND	MATERIAL: GRADE	MATERIAL: SPEC. NUMBER	APPROXIMATE UNIT WEIGHT (GRAINS)	APPROX. GROSS WT. OF RAW STOCK PER UNIT ASSEMBLIES		REMARKS
1	ASSEMBLY		73-2-158A				50-17-19	.17 LB			
2	BODY LOADING ASSEMBLY		73-2-161A					949.75			
3	BODY ASSEMBLY		73-2-161B					847.35			
4	DETONATOR, M23 LOADING ASSEMBLY		73-2-190A					7.4			
5											
6	HEAD ASSEMBLY		73-2-160A					262.99			
7											
8	LEAD CUP ASSEMBLY		73-2-160F					1.08			
9	HEAD METAL PARTS ASSEMBLY		73-2-160B					174.87			
10											
11	SLIDER LOADING ASSEMBLY		73-2-161D					117.10			
12											
13	BLOCK, HALF	2	73-2-162K	ROD	BRASS	"B" HALF HARD	QQ-B-611	7.25			
14	BODY	1	73-2-159A	ROD	ALUMINUM-ALLOY	CONDITION "T"	QQ-A-351	616.00			
15											
16											
17	CHARGE, LEAD CUP	1	73-2-160G		TETRYL		50-13-4	.44			
18	CHARGE, SLIDER	1	73-2-161E		TETRYL		50-13-4	1.10			
19											
20	CUP, BOOSTER	1	73-2-159E	ROD	ALUMINUM-ALLOY	CONDITION "T"	QQ-A-351	37.50			
21	CUP, CLOSING	1	73-2-162M	SHEET	ALUMINUM	CLASS "A"	QQ-A-561	.80			
22											
23	CUP, LEAD	1	73-2-160H	SHEET	ALUMINUM	CLASS "A"	QQ-A-561	.64			(c)
24	CUSHION, DETONATOR	1	73-2-162P	SHEET	COMPRESSED CORK		COMMERCIAL	.04			
25											
26											
27											
28											
29											
30	HEAD (ALTERNATIVE)	1	73-2-160K	ROD	ALUMINUM-ALLOY	CONDITION "T"	QQ-A-351	119.00			
31	HEAD	1	73-2-160C	ROD	ALUMINUM-ALLOY	CONDITION "T"	QQ-A-351	122.00			
32	HOLDER, DETONATOR	1	73-2-160E	ROD	BRASS	"B" HALF HARD	QQ-B-611	80.00			
33	NOSE (ALTERNATIVE)	1	73-2-160L	ROD	ALUMINUM-ALLOY	CONDITION "T"	QQ-A-351	32.00			
34	LEAD, BOOSTER	1	73-2-161C		TETRYL		50-13-4	.30			
35	NOSE	1	73-2-160D	ROD	ALUMINUM-ALLOY	CONDITION "T"	QQ-A-351	29.00			
36	PELLET, BOOSTER	1	73-2-161F		TETRYL		50-13-4	65.5			
37											
38	PIN, FIRING	1	73-2-162H	ROD	ALUMINUM-ALLOY	CONDITION "T"	QQ-A-351	6.15			
39											
40											
41	SCREW, RETAINING	1	73-2-159F	ROD	BRASS	"B" HALF HARD	QQ-B-611	109.00			
42	SLIDER	1	73-2-159C	ROD	BRASS	"B" HALF HARD	QQ-B-611	116.00			
43	SPRING, HALF BLOCK	1	73-2-162L	STRIP	BERYLLIUM COPPER		COMMERCIAL	2.26			
44											
45	SPRING, SLIDER	1	73-2-159G	WIRE	STEEL	WD 1085 W	48-18	4.00			(p)
46	WASHER, CLOSING	1	73-2-162N	SHEET	ALUMINUM	CONDITION "T"	(a)	.14			
47											
48					GRAPHITE	II	JAN-G-155				
49					VARNISH, SHELLAC	TYPE II, B	TT-V-91				
50					LACQUER, CELLULOSE NITRATE		3-158				

(C) ALTERNATIVE MATERIAL:- ALUMINUM-ALLOY, CONDITION "T"; SPEC. QQ-A-351.
(P) PROTECTIVE FINISHES, SPEC 57-0-2.
(Pa) TYPE I, CLASS TS.

LIST OF SPECIFICATIONS

LINE NO.		SPEC. NUMBER *	REQUIRED BY
1	AMMUNITION, EXCEPT SMALL ARMS AMMUNITION, GENERAL SPEC. FOR	50-0-1	DRG 73-2-158
2	ALUMINUM-ALLOY (ALUMINUM-COPPER-MAGNESIUM-MANGANESE); ETC.	QQ-A-351	DRG 73-2-159
3	ALUMINUM, PLATES AND SHEETS	QQ-A-561	DRG. 73-2-162
4			
5	ALUMINUM ALLOY, PLATES, SHEETS AND STRIPS	(a)	DRG 73-2-162
6	BRASS, COMMERCIAL; BARS, PLATES, RODS, SHAPES, ETC.	QQ-B-611	DRG 73-2-159
7	LACQUER, CELLULOSE NITRATE, AND THINNER (CLEAR & PIGMENTED)	3-158	DRG 73-2-158
8	GRAPHITE	JAN-G-155	DRG 73-2-161
9	FUZE, POINT DETONATING, M56, LOADING, ASSEMBLING AND PACKING	50-17-19	DRG 73-2-158
10			
11	FUZE, POINT DETONATING, M56, PARTS FOR	50-40-11	DRG 73-2-158
12	METALS; GENERAL SPECIFICATION FOR INSPECTION OF	QQ-M-151	QQ-B-611
13			
14			
15	PAPER, GENERAL SPECIFICATIONS (d)	UU-P-31	50-11-49
16	TETRYL	50-13-4	DRG 73-2-161
17			
18			
19	STEEL, WIRE, MUSIC SPRING	48-18	DRG 73-2-159
20			
21	SURFACE FINISHES	URAX-6	DRG 73-2-161
22			
23	VARNISH; SHELLAC	TT-V-91	DRG 73-2-160
24			
25			
26			
27			
28			
29			
30			
31			
32			
33			
34			
35			

(a) SPECS. QQ-A-353, QQ-A-355 OR QQ-A-362

* THE SPECIFICATION NUMBERS SHOWN ARE BASIC NUMBERS ONLY. WHEN A SPECIFICATION IS REVISED, A LETTER IS AFFIXED TO ITS BASIC NUMBER. SPECIFICATIONS REFERRED TO IN THESE SPECIFICATIONS AND NOT LISTED HEREON, SHALL NOT APPLY.
(d) THESE SPECIFICATIONS ARE NOT MANDATORY BUT MAY BE USED BY THE CONTRACTOR.

LIST OF DRAWINGS

LINE NO.		DRAWING NUMBER
1	ASSEMBLY	73-2-158
2	DETAILS	73-2-159
3	DETAILS	73-2-160
4	DETAILS	73-2-161
5	DETAILS	73-2-162
6	DETONATOR, M23, LOADING ASSEMBLY	73-2-190
7		

0 1 2 INCHES

FUZE, POINT DETONATING, M56. ASSEMBLY

JUNE 6, 1940

CLASS	DIVISION	DRAWING	FILE
73	2	158	

REVISIONS

1	6-6-41
2	11-20-41
3	1-20-42
4	8-1-42
5	2-10-43
6	8-15-45

TOLERANCE ON DIMENSIONS NOT OTHERWISE SPECIFIED
DECIMAL ±
FRACTIONAL ±
ANGULAR ±

DRG. PERTAINS TO

D

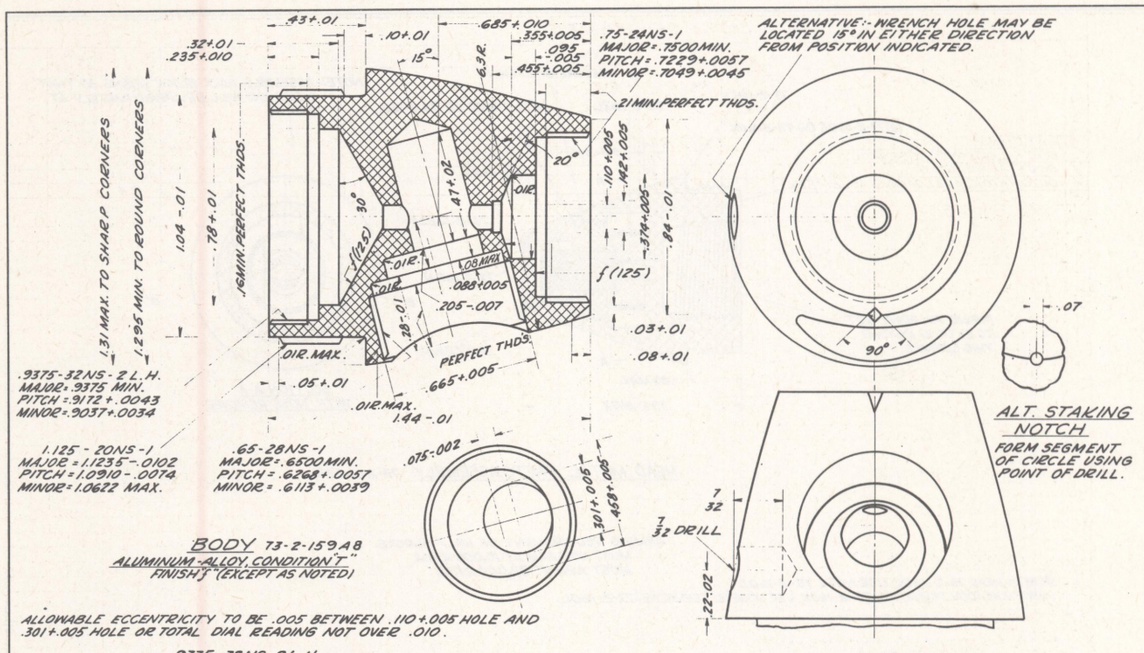
DFTSMAN. V.J.M. | TRACER Jean Trudt | ENGINEER
CHECKER A.K.B. | G.C. | ENGINEER M.T.

SUBMITTED:- LT. COL., ORD. DEPT., U.S.A.

EXAMINED:- MAJ., ORD. DEPT., U.S.A.

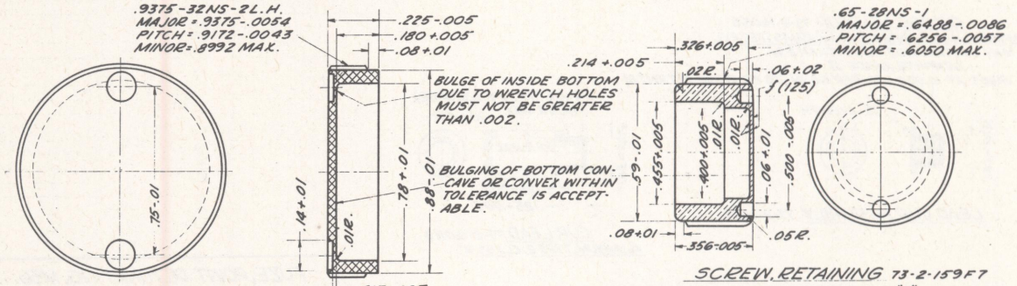
APPROVED BY ORDER OF THE CHIEF OF ORDNANCE:- LT. COL., ORD. DEPT., U.S.A.

ORDNANCE DEPT., U.S.A.



BODY 73-2-159A8
ALUMINUM-ALLOY, CONDITION "T"
FINISH "f" (EXCEPT AS NOTED)

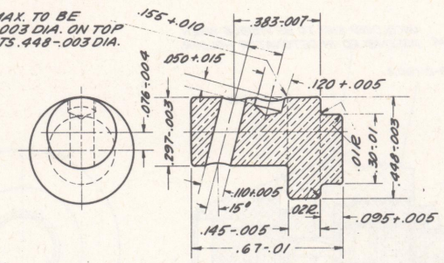
ALLOWABLE ECCENTRICITY TO BE .005 BETWEEN .110+.005 HOLE AND .301+.005 HOLE OR TOTAL DIAL READING NOT OVER .010.



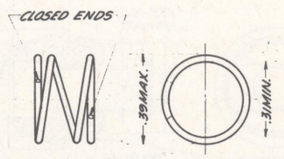
CUP, BOOSTER 73-2-159E7
ALUMINUM-ALLOY, CONDITION "T"
FINISH "f" (125)

SCREW, RETAINING 73-2-159F7
COMMERCIAL BRASS ROD, COMPOSITION "B", HALF HARD
FINISH "f" (EXCEPT AS NOTED)

TOOLMARK .020 MAX. TO BE ALLOWED ON .297-.003 DIA. ON TOP WHERE IT INTERSECTS .448-.003 DIA.



SLIDER 73-2-159C7
COMMERCIAL BRASS ROD, COMPOSITION "B", HALF HARD
FINISH "f"



SPRING, SLIDER 73-2-159G8
STEEL, WIRE, MUSIC SPRING, NO 1085 W

REQUIREMENTS

A- SOLID HEIGHT NOT OVER .105 INCH.
B- WIND LEFT HAND.
C- SEASON THOROUGHLY AFTER WINDING.
D- TREAT TO REMOVE EMBRITTLEMENT, WITHIN 24 HOURS AFTER PLATING.
E- MUST MEET ARMING LIMITS OF SLIDER AS SPECIFIED UNDER BODY ASSEMBLY. (OCCASIONAL CHECK WILL BE MADE, AFTER COMPRESSION FOR AT LEAST 24 HOURS, AT THE ASSEMBLED HEIGHT).

ADVISORY DATA (MAY BE VARIED TO MEET REQUIREMENTS)

A- DIAMETER OF WIRE = .029 INCH.
B- TOTAL NUMBER OF COILS = 2 3/4.
C- NUMBER OF ACTIVE COILS = 1.
D- ADJUST FREE HEIGHT TO MEET LOAD AT .15 INCH. SUGGESTED TRAIL FREE HEIGHT = .31 INCH.
E- LOAD AT .15 INCH = 3 LBS. 1 OZ. ± 4 OZ.
F- LOAD APPLIES AFTER SEASONING, PLATING AND TREATMENT TO REMOVE EMBRITTLEMENT.
G- SEASON BY HEATING TO 500° F. FOR 30 MINUTES.
H- TO REMOVE EMBRITTLEMENT, HEAT TO 300° F. FOR AT LEAST 30 MINUTES AS SOON AFTER PLATING AS PRACTICABLE.

REMOVE ALL BURRS.

SCALE, INCHES, 4/1.

FOR ALTERNATIVE MATERIALS AND PROTECTIVE FINISHES, SEE LIST OF PARTS, DRG 73-2-158.

FUZE, POINT DETONATING, M56. DETAILS.

JUNE 6, 1940	CLASS	DIVISION	DRAWING	FILE
REVISIONS	73	2	159	

1	6-25-40	7	2-10-43
2	10-15-40	8	8-15-45
3	6-6-41		
4	11-12-41		
5	1-20-42		
6	9-26-42		

TOLERANCE ON DIMENSIONS NOT OTHERWISE SPECIFIED
DECIMAL ±
FRACTIONAL ±
ANGULAR ±

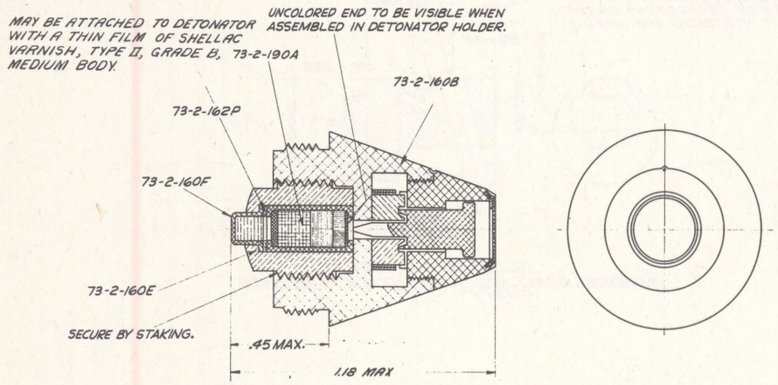
DRG. PERTAINS TO
73-2-158

D'TTSMAN R.H.W. | TRACER Jan Mull | ENGINEER O.K.
CHECKED W.M.T. | CH | ENGINEER M.T.

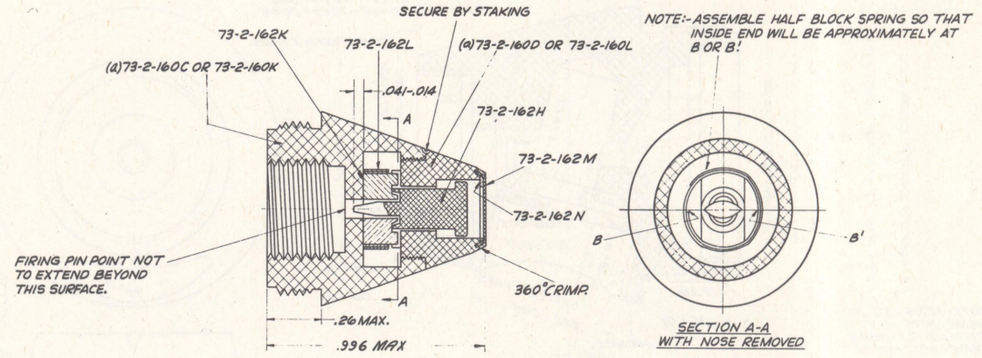
SUBMITTED:- Lt. Col., ORD. DEPT. U.S.A.
EXAMINED:- Maj. ORD. DEPT. U.S.A.
APPROVED BY ORDER OF THE CHIEF OF ORDNANCE:- Lt. Col., ORD. DEPT. U.S.A.

D

ORDNANCE DEPT. U.S.A.



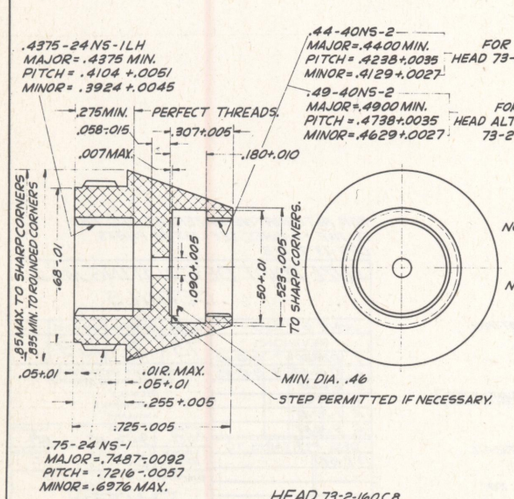
HEAD ASSEMBLY 73-2-160A8



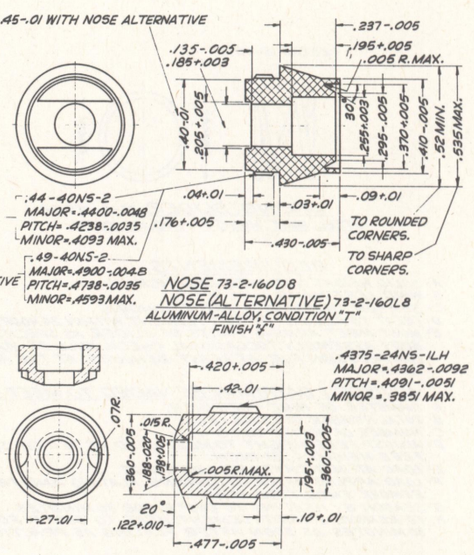
HEAD METAL PARTS ASSEMBLY 73-2-160B8

ARMING REQUIREMENT OF HALF BLOCKS.
MUST NOT ARM AT 10,000 R.P.M.
MUST ARM AT 32,000 R.P.M.

(a) WITH HEAD 73-2-160C USE NOSE 73-2-160D
(a) WITH HEAD(ALTERNATIVE) 73-2-160K USE NOSE(ALTERNATIVE) 73-2-160L.



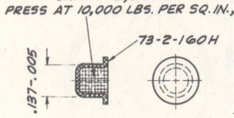
HEAD 73-2-160C8
HEAD (ALTERNATIVE) 73-2-160K8
ALUMINUM-ALLOY, CONDITION "T"
FINISH "F"



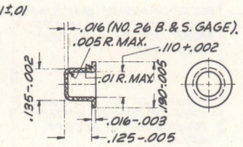
NOSE 73-2-160D8
NOSE (ALTERNATIVE) 73-2-160L8
ALUMINUM-ALLOY, CONDITION "T"
FINISH "F"

HOLDER, DETONATOR 73-2-160E7
COMMERCIAL BRASS, ROD, COMPOSITION "B"; HALF HARD
FINISH "F"

CHARGE, LEAD CUP 73-2-160G8
APPROX. .44 GRAIN (28.5 MILLIGRAMS) TETRYL
MAY CONTAIN NOT MORE THAN 2% GRAPHITE, GRADE II
PRESS AT 10,000 LBS. PER SQ. IN., TO BE FLUSH WITHIN ±.01



LEAD CUP ASSEMBLY 73-2-160F



CUP, LEAD 73-2-160H8
ALUMINUM, TYPE 2, CLASS "A"

REMOVE ALL BURRS.

SCALE, INCHES, 4/1

FUZE, POINT DETONATING, M56. DETAILS.

JUNE 6, 1940

REVISIONS			
1	12-3-40	6	9-26-42
2	3-19-41	7	2-10-43
3	6-6-41	8	8-15-45
4	11-29-41		
5	1-20-42		

DRG. PERTAINS TO
73-2-158

CLASS	DIVISION	DRAWING	FILE
73	2	160	

TOLERANCE ON DIMENSIONS NOT OTHERWISE SPECIFIED
DECIMAL ±
FRACTIONAL ±
ANGULAR ±

D'FTSMAN	TRACER	ENGINEER
A.E.R.	A.J.9	
CHECKER	O.C.	ENGINEER
QX8.		M.T.

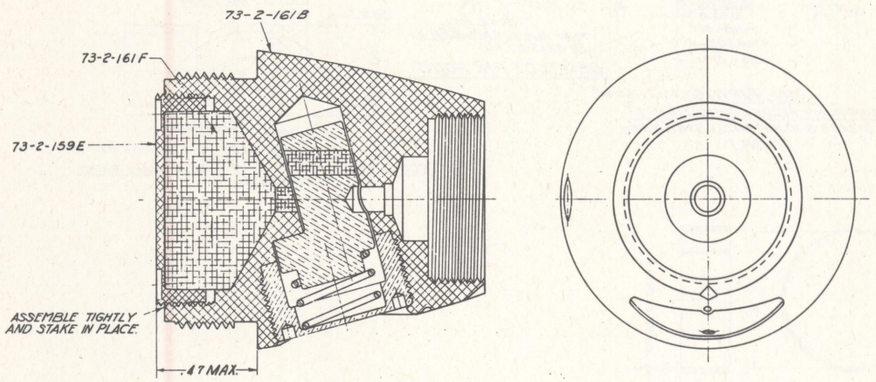
SUBMITTED:- LT. COL., ORD. DEPT. U.S.A.

EXAMINED:- MAJ. ORD. DEPT. U.S.A.

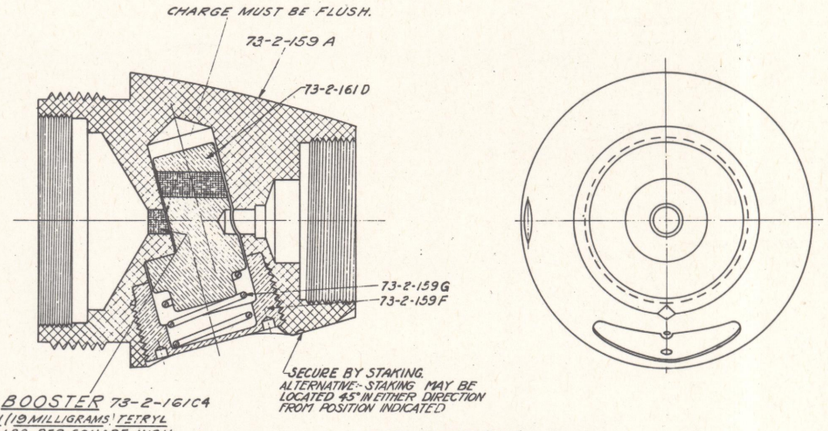
APPROVED BY ORDER OF THE CHIEF OF ORDNANCE:- LT. COL., ORD. DEPT. U.S.A.

D

ORDNANCE DEPT. U.S.A.



BODY LOADING ASSEMBLY 73-2-161A4

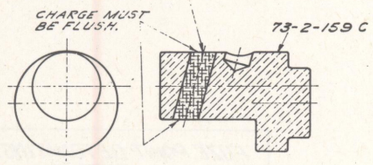


LEAD, BOOSTER 73-2-161C4
APPROX. .3 GRAIN (19 MILLIGRAMS) TETRYL
PRESS AT 10000 LBS. PER SQUARE INCH.
MAY CONTAIN NOT MORE THAN 2% GRAPHITE, GRADE II.

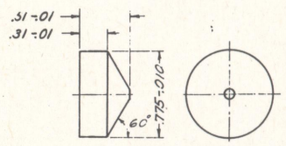
BODY ASSEMBLY 73-2-161B4

ARMING REQUIREMENTS OF SLIDER
MUST NOT ARM AT 4000 R.P.M.
MUST ARM AT 8000 R.P.M.

CHARGE SLIDER 73-2-161E4
APPROX. 1.1 GRAINS (71 MILLIGRAMS) TETRYL
PRESS AT 10000 LBS. PER SQUARE INCH.
MAY CONTAIN NOT MORE THAN 2% GRAPHITE, GRADE II.



SLIDER LOADING ASSEMBLY 73-2-161D1



PELLET, BOOSTER 73-2-161F4
APPROX. 65.5 GRAINS (4.3 GRAMS) TETRYL
MAY CONTAIN NOT MORE THAN 2% GRAPHITE, GRADE II.

SPECIFIC GRAVITY; ALL PLACES, 1.45 TO 1.60

REMOVE ALL BURRS.

NOTICE THIS DRAWING SHALL NOT BE USED NOR REPRODUCED EITHER WHOLLY OR IN PART EXCEPT WHEN AUTHORIZED IN CONNECTION WITH UNITED STATES GOVERNMENT PROCUREMENT.

SCALE, INCHES, 4, 2, 1.

FUZE, POINT DETONATING, M56. DETAILS.

JUNE 6, 1940	CLASS	DIVISION	DRAWING	FILE
	73	2	161	

REVISIONS

1	6-6-41	
2	1-20-42	
3	9-26-42	
4	8-15-43	

SYMBOL

D'FTSMAN	TRACER	ENGINEER
R.H.W.	R.H.W.	

CHECKER W.M.F. CHECKER CHIEF D'FTSMAN M.T.

SUBMITTED:
LT. COL., ORD DEPT U.S.A.

EXAMINED:
MAJ. ORD DEPT. U.S.A.

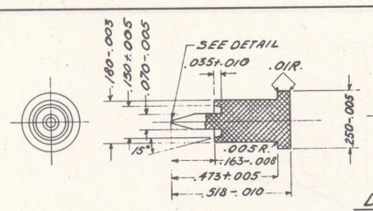
APPROVED BY ORDER OF THE CHIEF OF ORDNANCE:
LT. COL., ORD DEPT U.S.A.

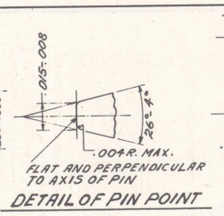
DRG. PERTAINS TO
73-2-158

D

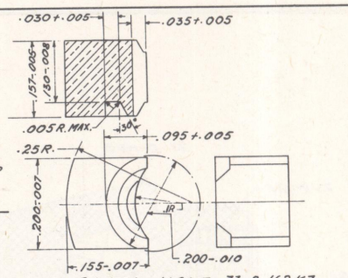
ORDNANCE DEPT., U.S.A.

E-26083



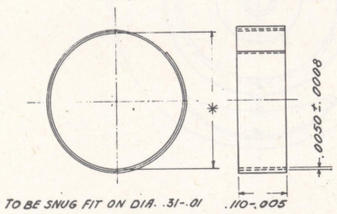


DETAIL OF PIN POINT



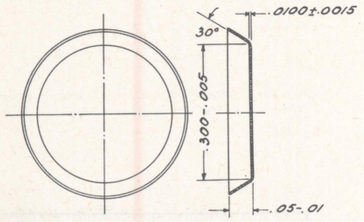
PIN, FIRING 73-2-162 H8
ALUMINUM-ALLOY, CONDITION "T"
B-60 TO B-70 ROCKWELL HARDNESS
FINISH f

BLOCK, HALF 73-2-162 K7
COMMERCIAL BRASS, ROD, COMPOSITION "B", HALF HARD
FINISH "f"

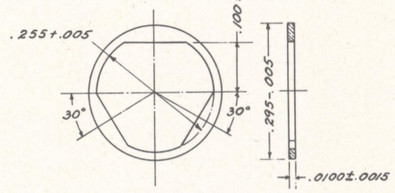


* TO BE SNUG FIT ON DIA. .31-.01 .110-.005

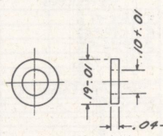
SPRING, HALF BLOCK 73-2-162 L1
BERYLLIUM COPPER, ANNEALED, OR 2 NUMBERS HARD, COMMERCIAL.
HEAT TREAT TO MEET ARMING LIMITS SHOWN
ON METAL PARTS ASSEMBLY
1.80-.05 LENGTH OF SPRING.



CUP, CLOSING 73-2-162 M4
ALUMINUM, TYPE 2, CLASS "A"



WASHER, CLOSING 73-2-162 N6
ALUMINUM, SHEET, CONDITION "T"



CUSHION, DETONATOR 73-2-162 P
COMPRESSED CORK, COMMERCIAL
DIAMETER DIMENSIONS CONTROL
TOOL MANUFACTURE.

REMOVE ALL BURRS.

SCALE, INCHES, 4/1, 8/1

FUZE, POINT DETONATING, M56. DETAILS.

JUNE 6, 1940.

CLASS	DIVISION	DRAWING	FILE
73	2	162	

REVISIONS

1	12-30-40	6	2-10-43
2	11-29-41	7	1-4-44
3	4-23-42	8	8-15-45
4	8-1-42		
5	9-26-42		

DRG. PERTAINS TO
73-2-158

TOLERANCE ON DIMENSIONS NOT OTHERWISE SPECIFIED
DECIMAL ±
FRACTIONAL ±
ANGULAR ±

D'FTSMAN	TRACED	ENGINEER
AC	J.B.	
CHECKER		ENGINEER
A.N.S.	E.M.	M.T.

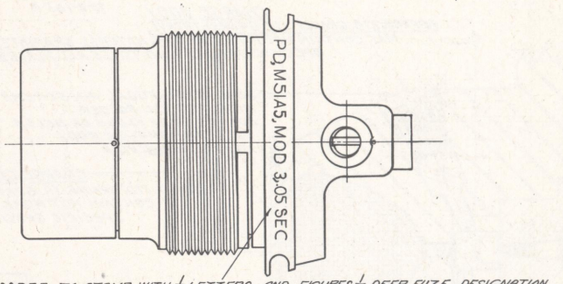
SUBMITTED:- LT. COL., ORD. DEPT., U. S. A.

EXAMINED:- MAJ. ORD. DEPT., U. S. A.

APPROVED BY ORDER OF THE CHIEF OF ORDNANCE:- LT. COL., ORD. DEPT., U. S. A.

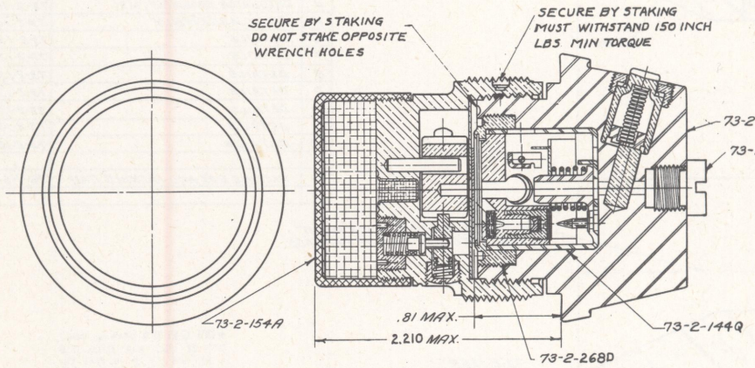
D

ORDNANCE DEPT., U. S. A.



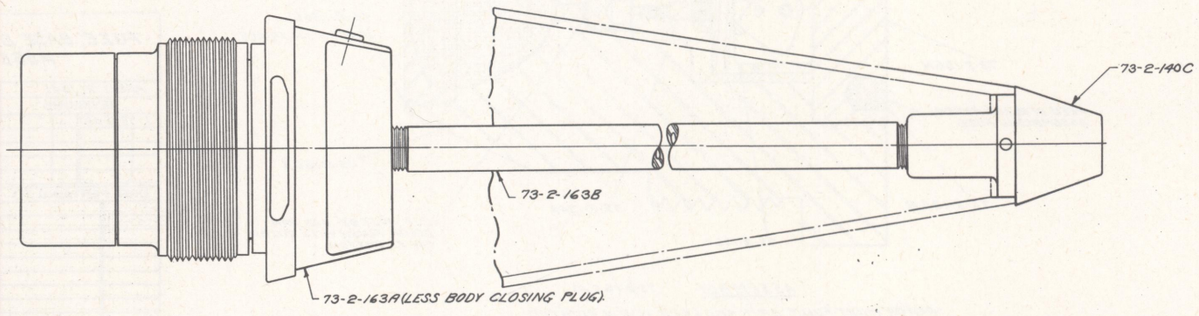
LOADER TO STAMP WITH $\frac{1}{8}$ LETTERS AND FIGURES $\frac{1}{64}$ DEEP, FUZE DESIGNATION ON ONE SIDE, DIRECTLY OPPOSITE STAMP LOADER'S LOT NUMBER (INCLUDING INITIALS OR SYMBOL OF LOADER) AND MONTH AND YEAR LOADED. STAMPING TO BE CENTERED APPROX 90° FROM WRENCH SLOTS

SAMPLE STAMPING: □□-□-□□, □□-□□ (LOT NUMBER; MONTH AND YEAR LOADED)



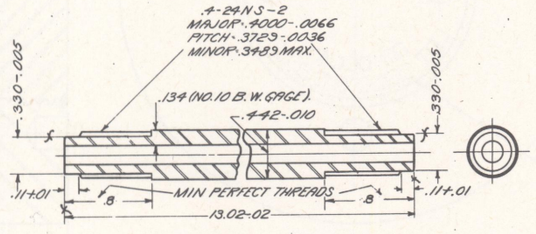
ASSEMBLY 73-2-163A7

HEAD ASSEMBLY 73-2-140C AND TUBE 73-2-163B TO BE PACKED AND SHIPPED WITH ASSEMBLY.



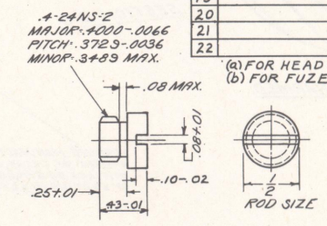
ASSEMBLY IN SHELL

WT. = 2.47 LBS.



TUBE 73-2-163B4

STEEL TUBING, WD X 1335, TYPE I, COLD DRAWN AND FINISH ANNEALED OR TYPE III.



PLUG, BODY CLOSING 73-2-163D5

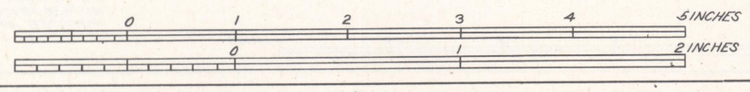
COMMERCIAL BRASS, ROD, COMPOSITION "B" HALF-HARD FINISH "Y"

LINE NO.	LIST OF DRAWINGS	DRAWING NUMBER
1	ASSEMBLY	73-2-163
2	LIST OF PARTS & LIST OF SPECS	73-2-163A
3	DETAILS	73-2-128
4	DETAILS	73-2-140
5	DETAILS	73-2-143
6	DETAILS	73-2-200
7	DETAILS	73-2-268
8	DELAY PLUNGER ASSEMBLY, M1	73-2-144
9	BOOSTER, M21A4, ASSEMBLY	73-2-154
10	DETONATOR, M24, ASSEMBLY	73-2-191
11	CAN, PACKING (a)	76-7-631
12	BOX, PACKING (a)	76-1-555X
13	PACKING AND MARKING OF BOX (a)	20-4-258
14		
15	CONTAINER, FIBER, M47A1 (b)	76-1-603
16	PACKING AND MARKING OF CONT. (b)	75-14-285
17	BOX, PACKING (b)	76-1-522
18	PACKING AND MARKING OF BOX (b)	20-4-190
19		
20		/
21		
22		

(a) FOR HEAD ASSEMBLY
(b) FOR FUZE ASSEMBLY.

FOR ALTERNATIVE MATERIAL AND PROTECTIVE FINISHES, SEE DRG. 73-2-163A.

REMOVE ALL BURRS.



FUZE, P.D. M5A5, MOD. 3. ASSEMBLY AND DETAILS.

FEB. 14, 1941

REVISIONS				
1	5-22-41	7	10-18-49	
2	12-31-42			
3	11-2-43			
4	8-19-44			
5	8-15-45			
6	6-2-46			

DRG. PERTAINS TO

CLASS	DIVISION	DRAWING	FILE
73	2	163	

TOLERANCE ON DIMENSIONS NOT OTHERWISE SPECIFIED
DECIMAL ±
FRACTIONAL ±
ANGULAR ±

D'TSMAN	TRACER	ENGINEER
LMT.	J. Yanuck	OS
CHECKER		ENGINEER
Hank	[illegible]	M.T.

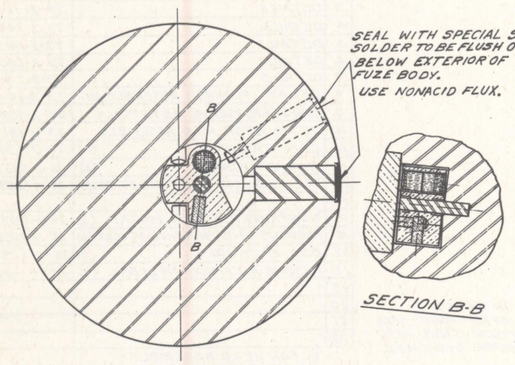
SUBMITTED: [signature] COL., ORD. DEPT., U.S.A.

EXAMINED: [signature] LT. COL., ORD. DEPT., U.S.A.

APPROVED BY ORDER OF THE CHIEF OF ORDNANCE: R.H. Adamson LT. COL., ORD. DEPT., U.S.A.

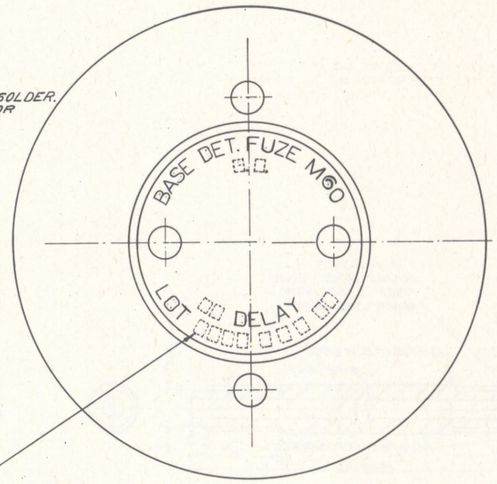
D

ORDNANCE DEPT., U.S.A.



SECTION A-A, UNARMED.

SECTION B-B



LOADING MANUFACTURER TO STAMP AMOUNT OF DELAY, LOT NUMBER, HIS INITIALS OR SYMBOL, MONTH AND YEAR OF LOADING IN 1/8 LETTERS AND FIGURES .01 DEEP.

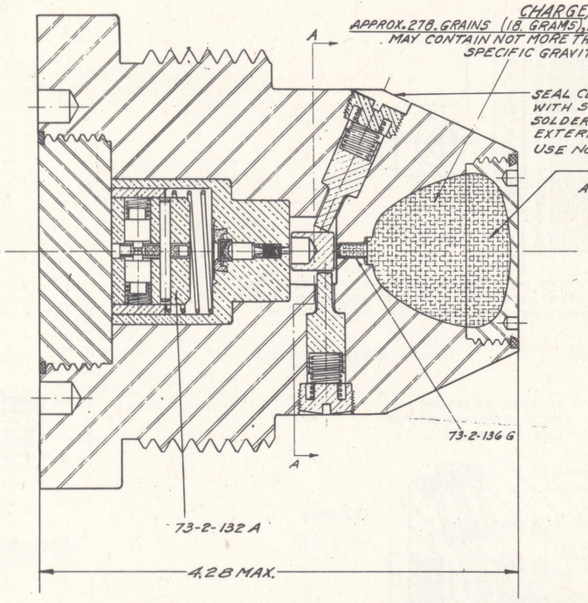
CHARGE BODY 73-2-165 B

APPROX. 218 GRAINS (18 GRAMS) TETRYL.
MAY CONTAIN NOT MORE THAN 2% NATURAL GRAPHITE, GRADE "B"
SPECIFIC GRAVITY = 1.40 TO 1.55 ALL PLACES.

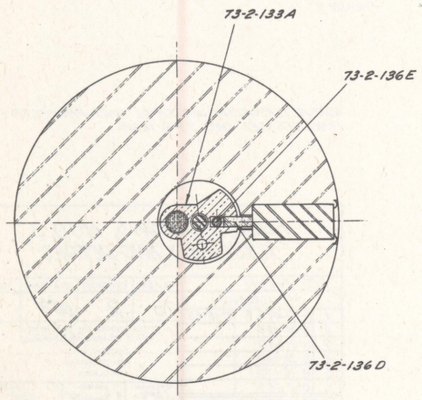
SEAL CENTRIFUGAL PIN SCREWS WITH SPECIAL SOLDER. SOLDER TO BE FLUSH OR BELOW EXTERIOR OF FUZE BODY. USE NONACID FIUX.

CHARGE CLOSING SCREW 73-2-165 C

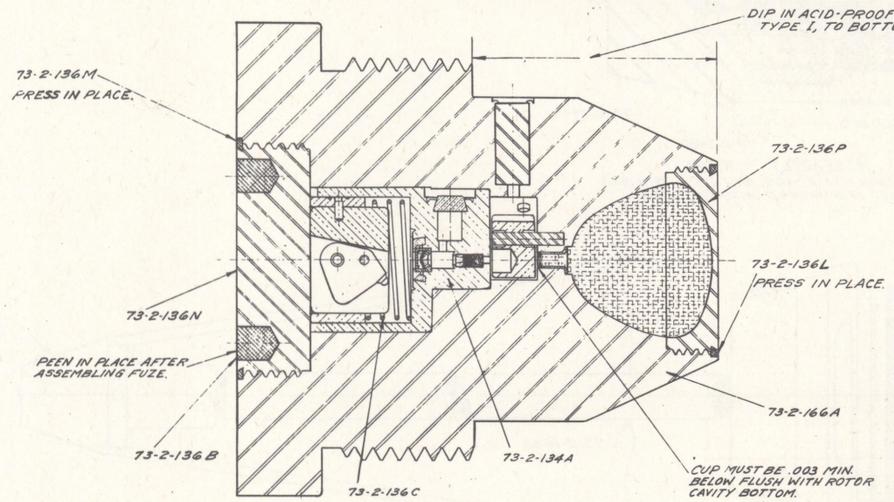
APPROX. 170. GRAINS (11. GRAMS) TETRYL:
MAY CONTAIN NOT MORE THAN 2% NATURAL GRAPHITE, GRADE "B"
SPECIFIC GRAVITY = 1.40 TO 1.55 ALL PLACES



LINE NO.	LIST OF DRAWINGS	DRAWING NUMBER
1	ASSEMBLY	73-2-165
2	LIST OF SPECIFICATIONS	73-2-165-A
3	LIST OF PARTS	73-2-165-B
4	DETONATOR ASSEMBLY, M21	73-2-188
5	BODY ASSEMBLY	73-2-166
6	DETAILS	73-2-167
7	DETAILS	73-2-130
8	DETAILS	73-2-132
9	DETAILS	73-2-133
10	DETAILS	73-2-134
11	DETAILS	73-2-135
12	DETAILS	73-2-136
13		
14	PACKING BOX AND PACKING CAN	76-7-642
15		



SECTION A-A ARMED



ASSEMBLY 73-2-165 A1

ROTOR MUST FULLY ARM AND LOCK WHEN ROTATED AT 1450 REVOLUTIONS PER MINUTE AND NOT ARM WHEN ROTATED AT 1150 REVOLUTIONS PER MINUTE.
WEIGHT = 9.22 LBS.

0 1 2 3 4 5 INCHES

NOTICE: THIS DRAWING SHALL NOT BE USED, NOR REPRODUCED EITHER WHOLLY OR IN PART EXCEPT WHEN AUTHORIZED IN CONNECTION WITH UNITED STATES GOVERNMENT PROCUREMENT.

FUZE, BASE DETONATING, M60. ASSEMBLY.

APRIL 21, 1941.	CLASS	DIVISION	DRAWING	FILE
REVISIONS	73	2	165	
1 8-15-45				

D'PTSMAN	TRACER	L'DG D'PTSMAN
R.F.H.	R.F.H.	KL
CHECKER		CHIEF D'PTSMAN
WJH		[illegible]

DRG. PERTAINS TO

SUBMITTED: [signature] LT. COL., ORD. DEPT. U. S. A.

EXAMINED: [signature] LT. COL., ORD. DEPT. U. S. A.

APPROVED BY ORDER OF THE CHIEF OF ORDNANCE: [signature] LT. COL., ORD. DEPT. U. S. A.

D

ORDNANCE DEPT., U.S.A.

LINE NO.	LIST OF SPECIFICATIONS	SPEC. NUMBER *	REQUIRED BY
1	AMMUNITION, EXCEPT SMALL ARMS AMM. GEN. SPEC. FOR	50-O-1	DRG. 73-2-165
2	ACACIA (GUM ARABIC) (TECHNICAL USE)	JAN-A-158	DRG. 73-2-165B
3	ALUMINUM; PLATES AND SHEETS	QQ-A-561	DRG. 73-2-133
4	ANTIMONY SULPHIDE.	JAN-A-159	DRG. 73-2-165B
5	ALUMINUM ALLOY (AL-CU-MG-MN) BARS, RODS, SHAPES AND WIRE	QQ-A-351	DRG. 73-2-136
6			
7			
8	BRASS, CARTRIDGE; SHEET AND STRIP	JAN-B-50	DRG. 73-2-135
9	BRASS, COMM.; BARS, PLATES, RODS, SHAPES, ETC.	QQ-B-611	DRG. 73-2-132
10	BRASS, NAVAL; BARS, PLATES, RODS, SHAPES, SHEETS & STRIPS	QQ-B-636	DRG. 73-2-133
11			
12	COMPOUND, N.R.C.	50-11-10	DRG. 73-2-133
13			
14	FLUX, NONACID	83-12	DRG. 73-2-165
15	FORGINGS, LIGHT, DROP & MISCEL. STEEL, CARBON & ALLOY	57-105	DRG. 73-2-167
16	FUZE, B.D, M60 LOADING, ASSEMBLING AND PACKING	PXS-889	DRG. 73-2-165
17	GRAPHITE	JAN-G-155	DRG. 73-2-165
18	FUZE, B.D, M60 METAL PARTS FOR	PXS-889-1	DRG. 73-2-165
19	GUM TRAGACANTH (FOR USE IN AMMUNITION)	JAN-G-96	DRG. 73-2-165B
20	GILDING METAL, SHEETS AND STRIPS	57-171-2	DRG. 73-2-136
21			
22			
23	LEAD THIOCYANATE (SULPHOCYANATE)	JAN-L-65	DRG. 73-2-165B
24	LEAD AZIDE	50-13-12	DRG. 73-2-133
25			
26			
27			
28			
29	METALS, GENERAL SPECIFICATION FOR THE INSPECTION OF	QQ-M-151	QQ-B-611
30			
31			
32			
33			
34			
35	PAINT, ACID-PROOF BLACK, FOR AMMUNITION	3-106	DRG. 73-2-165
36			
37	PAPER (FOILING)	JAN-P-224	DRG. 73-2-135
38			
39	POTASSIUM CHLORATE (FOR USE IN AMMUNITION)	JAN-P-150	DRG. 73-2-165B
40	POWDER, BLACK	JAN-P-223	DRG. 73-2-134
41			
42			
43			
44			
45	SOLDER, LOW MELTING POINT	57-98	DRG. 73-2-156B
46	STEEL, CARBON AND ALLOY, BARS	57-107	DRG. 73-2-167
47			
48	STEEL, TOOL, CARBON AND ALLOY	57-108	DRG. 73-2-132
49			
50	TIN; PIG	QQ-T-371	DRG. 73-2-165B
51	TETRYL	JAN-T-339	DRG. 73-2-165
52	TRINITROTOLUENE (TNT)	JAN-T-248	DRG. 73-2-165B
53	TUBING; BRASS, SEAMLESS	WW-T-791	DRG. 73-2-132
54	TUBING; ALUMINUM, ROUND, SEAMLESS	WW-T-783	DRG. 73-2-136
55			
56			
57	WIRE, STEEL (CARBON); MUSIC, SPRING	QQ-W-470	DRG. 73-2-132
58			
59			
60			
61			
62			
63			
64			
65			
66			
67			
68			
69			

* THE SPECIFICATION NUMBERS SHOWN ARE BASIC NUMBERS ONLY. WHEN A SPECIFICATION IS REVISED A LETTER IS AFFIXED TO ITS BASIC NUMBER. SPECIFICATIONS REFERRED TO IN THESE SPECIFICATIONS AND NOT LISTED HEREON, SHALL NOT APPLY.

NOTICE: THIS DRAWING SHALL NOT BE USED NOR REPRODUCED EITHER WHOLLY OR IN PART EXCEPT WHEN AUTHORIZED IN CONNECTION WITH UNITED STATES GOVERNMENT PROCUREMENT.

FUZE, BASE DETONATING, M60. LIST OF SPECIFICATIONS.

APRIL 21, 1941.

CLASS	DIVISION	DRAWING	FILE
73	2	165A	

REVISIONS

1	1-10-42
2	8-15-45

D'FTSMAN R.F.W. | TRACER R.F.W. | L DG. D'FTSMAN RL

CHECKER | CHIEF D'FTSMAN

DRG. PERTAINS TO

73-2-165

SUBMITTED: William Crego
LT. COL., ORD. DEPT. U. S. A.

EXAMINED: [illegible]
LT. COL., ORD. DEPT. U. S. A.

APPROVED BY ORDER OF THE CHIEF OF ORDNANCE: [illegible]
LT. COL., ORD. DEPT. U. S. A.

D

ORDNANCE DEPT., U. S. A.

LIST OF PARTS

LINE NO.	NAME OF PART	NUMBER REQD PER COMPONENT	PIECE-MARK	MATERIAL: SIZE OR FORM	MATERIAL: KIND	MATERIAL: GRADE	MATERIAL: SPEC. NO.	APPROXIMATE UNIT WEIGHT (GRAINS)	APPROX. GROSS WT. OF RAW STOCK PER FINISHED ASSY. (LBS)	REMARKS
1	ASSEMBLY		73-2-165A				PXS-889	64556.00		
2	BODY ASSEMBLY		73-2-166A					53793.50		
3	BOOSTER CLOSING CUP ASSEMBLY		73-2-136G					2.88		
4	CENTRIFUGAL PLUNGER TYPE "F" ASSEM.		73-2-132A					1238.00		
5	DELAY HOLDER ASSEMBLY		73-2-134C					1838.00		
6	DELAY HOLDER ASSEMBLY (LOADING)		73-2-134A					1865.50		
7	DETONATOR ASSEMBLY M21		73-2-188A					8.1		
8	BODY PLATING ASSEMBLY		73-2-167A					53287.00		
9	PRIMER ASSEMBLY		73-2-135A					7.88		
10	RELAY ASSEMBLY		73-2-135F					.70		
11	ROTOR ASSEMBLY		73-2-133A					171.37		
12										
13										
14										
15	ANVIL, PRIMER	1	73-2-135E	ROD	BRASS	"B", HALF HARD	QQ-B-611	3.91	2.00	
16										
17										
18										
19	BODY	1	73-2-167B	BAR	STEEL	WD 1050	57-107	55270.00		(h)
20	BODY, PLUNGER	1	73-2-132B	ROD	BRASS	"B", HALF HARD	QQ-B-611	865.00	235.00	
21										
22										
23										
24	CHARGE, BODY	1	73-2-165B		TETRYL	GRADE I, CLASS "a"	JAN-T-339	278.00	43.00	
25	CHARGE, BOOSTER CLOSING CUP	1	73-2-136H		TETRYL	GRADE I, CLASS "a"	JAN-T-339	1.08	.47	
26	CHARGE, CLOSING SCREW	1	73-2-165C		TETRYL	GRADE I, CLASS "a"	JAN-T-339	170.00	27.00	
27	CHARGE, DELAY	1	73-2-134B		BLACK POWDER	"A-5"	JAN-P-223	.49	.08	
28										
29	CHARGE, PRIMER		73-2-135B		NO.70 PRIMER MIXTURE			.45	.07	(b)
30	CHARGE, RELAY	1	73-2-135G				50-13-12	.49	.08	
31	COVER, PRIMER	1	73-2-134E	ROD	CHROMIUM MOLYBDENUM STEEL	WDX4130	57-107	16.34	15.00	(g)
32	CUP BOOSTER CLOSING	1	73-2-136K	STRIP	GILDING METAL		57-171-2	1.80	.71	
33										
34	CUP, PRIMER	1	73-2-135C	STRIP	CARTRIDGE BRASS (m)	ANNEALED	JAN-B-50	3.50	4.50	
35	CUP, RELAY	1	73-2-135H	COILED SHEET	ALUMINUM	CLASS "A"	QQ-A-561	.21	.25	
36										
37										
38										
39										
40	DISC, PRIMER	1	73-2-135D	SHEET	FOILING PAPER	TYPE II	JAN-P-224	.02	.01	
41										
42										
43										
44	HOLDER, DELAY	1	73-2-134D	ROD	NAVAL BRASS	HALF HARD	QQ-B-636	2576.00	790.00	(d) (k)
45	HOUSING	1	73-2-132C	ROD	BRASS	"B", HALF HARD	QQ-B-611	271.00	59.00	(e)
46										
47										
48										
49	PIN	1	73-2-132E	ROD	STEEL		57-108	9.00	1.50	
50	PIN, CENTRIFUGAL	2	73-2-130C	ROD	BRASS	"B" HALF HARD	QQ-B-611	95.00	72.00	
51	PIN, CENTRIFUGAL PLUNGER	2	73-2-132G	ROD	BRASS	"B" HALF HARD	QQ-B-611	20.00	11.00	
52	PIN, FIRING	1	73-2-132D	STRIP	BRASS	"C" HARD	QQ-B-611	48.00	26.00	
53	PIN, HOUSING	1	73-2-132F	ROD	BRASS	"B", HALF HARD	QQ-B-611	4.00	.25	
54										
55	PIN, ROTOR LOCK (LONG)	1	73-2-136D	ROD	BRASS	"B" HALF HARD	QQ-B-611	4.00	1.19	
56	PIN, ROTOR LOCK (SHORT)	1	73-2-136E	ROD	BRASS	"B" HALF HARD	QQ-B-611	3.00	.78	
57	PIN, ROTOR PIVOT	1	73-2-130F	ROD	STEEL		57-108	17.00	2.70	
58	PIN, ROTOR STOP	1	73-2-130E	ROD	STEEL		57-108	73.00	16.00	
59	PLUG, BODY	1	73-2-130G	BAR	STEEL	WD 1115, WD 1120 OR WD 1140	57-107	107.50	18.00	
60	PLUG, BODY CLOSING	1	73-2-136N	BAR	STEEL	WD 1050	57-107	3912.00	940.00	
61	PLUG, DELAY PELLET	1	73-2-135K	ROD	NAVAL BRASS	50 FT	QQ-B-636	2.09	.60	
62	PLUG, DELAY HOLDER	1	73-2-134F	ROD	NAVAL BRASS	HALF HARD	QQ-B-636	18.00	5.00	
63	PLUG, WRENCH HOLE FILLING	2	73-2-136B		LEAD		COMMERCIAL	80.00	30.00	(a)
64										
65										
66										

LIST OF PARTS

LINE NO.	NAME OF PART	NUMBER REQD PER COMPONENT	PIECE-MARK	MATERIAL: SIZE OR FORM.	MATERIAL: KIND	MATERIAL: GRADE	MATERIAL: SPEC. NO.	APPROXIMATE UNIT WEIGHT (GRAINS)	APPROX. GROSS WT. OF RAW STOCK PER FINISHED ASSY. (LBS)	REMARKS
67	ROTOR	1	73-2-133B	ROD	NAVAL BRASS	HALF HARD	QQ-B-636	163.30	43.00	
68	RING, CAULKING, PLUG	1	73-2-136M	SHEET	ALUMINUM	CLASS "A"	QQ-A-561	51.00	63.00	(f)
69	RING, CAULKING, SCREW	1	73-2-136L	SHEET	ALUMINUM	CLASS "A"	QQ-A-561	32.00	41.00	(f)
70										
71	SCREW, CENTRIFUGAL PIN	2	73-2-130B	ROD	BRASS	"B", HALF HARD	QQ-B-611	63.00	40.00	
72	SCREW, BOOSTER CLOSING	1	73-2-136P	BAR	STEEL	WD 1050	57-107	831.00	385.00	
73	SPRING, CENTRIFUGAL PIN	2	73-2-130D	WIRE	STEEL MUSIC WIRE	COMP. A	QQ-W-470	5.00	1.50	
74	SPRING, PLUNGER CENTRIFUGAL PIN	2	73-2-132H	WIRE	STEEL MUSIC WIRE	COMP. A	QQ-W-470	.50	.16	
75	SPRING, PLUNGER	1	73-2-136C	WIRE	STEEL MUSIC WIRE	COMP. A	QQ-W-470	43.00	7.15	
76										
77										
78										
79					PAINT, ACID-PROOF BLACK	TYPE 1	3-106			
80										
81										
82					COMPOUND, N.R.C. RED	"A"	50-11-10			
83					GRAPHITE	II	JAN-G-155			
84					FLUX, NONACID		83-12			
85					SOLDER, SPECIAL					(n)(c)
86										
87										
88										
89										
90										
91										
92										
93										
94										
95										
96										
97										
98										
99										
100										

(a) = WHEN FUZE IS SHIPPED IN PACKING CAN, TWO EXTRA WRENCH HOLE FILLING PLUGS MUST BE PACKED IN CAN.

(b) = NO. 70 PRIMER MIXTURE (PERCENTAGES ARE BY WEIGHT)
25% LEAD THIOCYANATE (SULPHOCYANATE) SPEC. JAN-L-65
17% ANTIMONY SULPHIDE SPEC. JAN-A-158
33⅓% POTASSIUM CHLORATE, GRADE "A" SPEC. JAN-P-150
5% TRINITROTOLUENE, GRADE I SPEC. JAN-T-248
EACH 6 POUND BATCH OF THE ABOVE MIXTURE SHALL BE MOISTENED WITH 350 C.C. OF THE FOLLOWING SOLUTION:
GUM TRAGACANTH, 60 GRAMS, 33.3% SPEC. JAN-G-96
ACACIA (GUM ARABIC) 110 GRAMS 61.3% SPEC. JAN-A-158
GELATINE GLUE, 10 GRAMS 5.4%
WATER (DISTILLED) 3,000 C.C.

(c) SPECIAL SOLDER COMPOSITION:-
BISMUTH, METALLIC---40.7%, COMMERCIAL
CADMIUM, METALLIC---31.4%, COMMERCIAL
PIG TIN 27.9%, SPEC. QQ-T-371
MELTING POINT APPROX. 217°F.

(d) TIN CONTENT .75% TO 1.25%.

(e) ALTERNATIVE MATERIAL:- BRASS TUBING, SEAMLESS, GRADE 3, SPEC. WW-T-791

(f) ALTERNATIVE MATERIAL:- SEAMLESS ALUMINUM TUBING, CLASS "A", SPEC. WW-T-783 OR ALUMINUM ROD, CONDITION "T" SPEC. QQ-A-351

(g) ALTERNATIVE MATERIAL:- STEEL, WD 4140

(h) ALTERNATIVE MATERIAL:- STEEL FORGING, WD 1050 SPEC. 57-105

(k) DELAY HOLDER FINISHED WEIGHT = 1820 GRAINS.

(m) = GRAIN SIZE .070 M M TO .120 MM.

(n) ALTERNATIVE:- SOLDER, LOW MELTING POINT, GRADE B, SPEC. 57-98

NOTICE THIS DRAWING SHALL NOT BE USED NOR REPRODUCED EITHER WHOLLY OR IN PART EXCEPT WHEN AUTHORIZED IN CONNECTION WITH UNITED STATES GOVERNMENT PROCUREMENT.

FUZE, BASE DETONATING, M 60. LIST OF PARTS.

APRIL 21, 1941.

REVISIONS		
1	12-10-41	
2	1-10-42	
3	4-23-44	
4	8-15-45	

DRG. PERTAINS TO 73-2-165

CLASS	DIVISION	DRAWING	FILE
73	2	165B	

D'FTSMAN R.F.W. | TRACER R.F.W. | L'DG. D'FTSMAN RL

CHECKER R.W.M. | D.C. | SUPV. D'FTSMAN L.C.M.

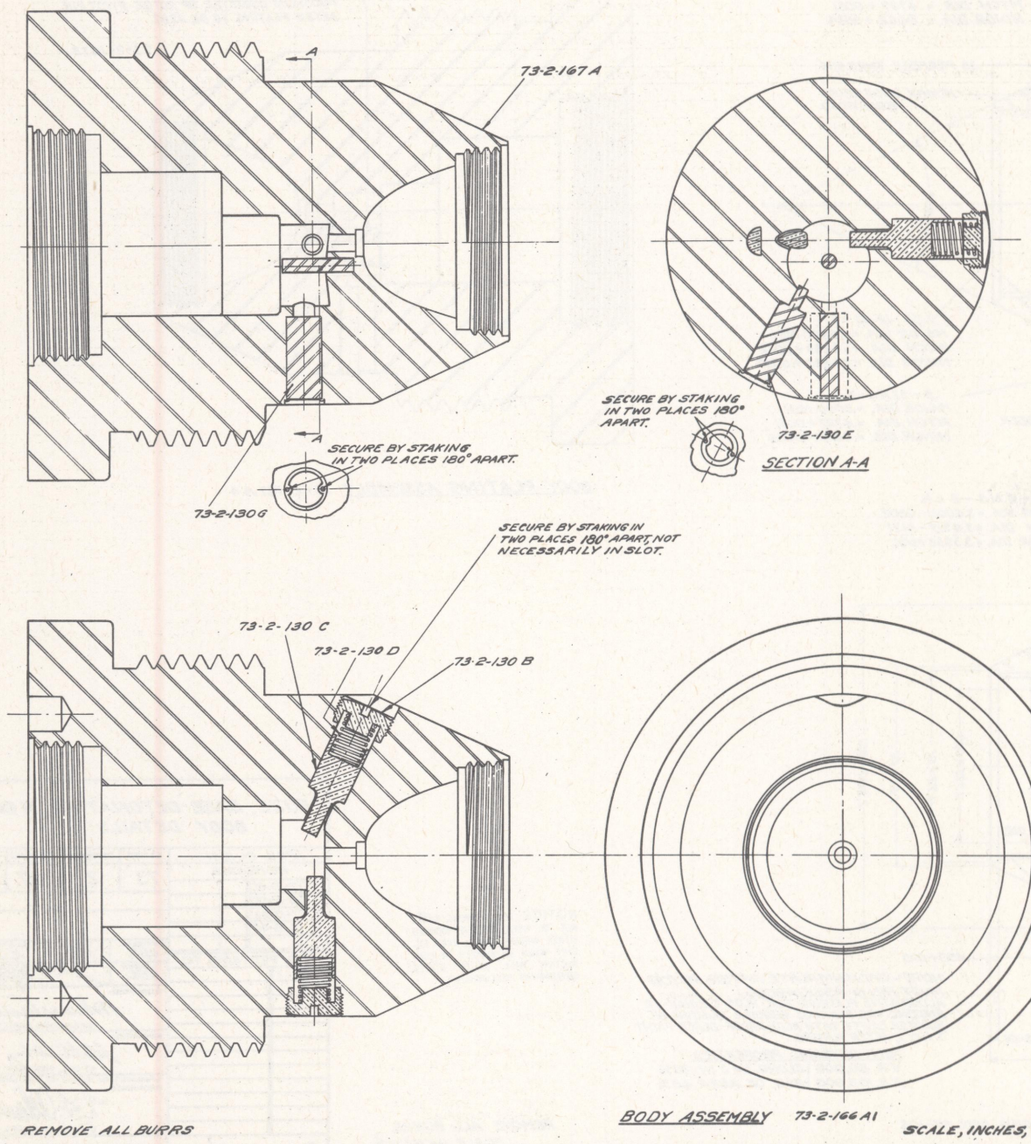
SUBMITTED:- William Crozier, LT. COL. ORD. DEPT. U. S. A.

EXAMINED:- W. A. Hinkley, LT. COL. ORD. DEPT. U. S. A.

APPROVED BY ORDER OF THE CHIEF OF ORDNANCE:- H. H. Johnson, LT. COL. ORD. DEPT. U. S. A.

D

ORDNANCE DEPT., U. S. A.



SECTION A-A

BODY ASSEMBLY 73-2-166 A1

SCALE, INCHES, 2/1

NOTICE: THIS DRAWING SHALL NOT BE USED NOR REPRODUCED EITHER WHOLLY OR IN PART EXCEPT WHEN AUTHORIZED IN CONNECTION WITH UNITED STATES GOVERNMENT PROCUREMENT.

FUZE, BASE DETONATING, M60. BODY ASSEMBLY

APRIL, 21 1941.

REVISIONS		CLASS	DIVISION	DRAWING	FILE
1	8-15-45	73	2	166	

DRG. PERTAINS TO
73-2-165

D'FTSMAN	TRACER	L'DG. D'FTSMAN
R.F.W.	R.F.W.	R.L.
CHECKER	O.D.	CHIEF D'FTSMAN
R.M.		

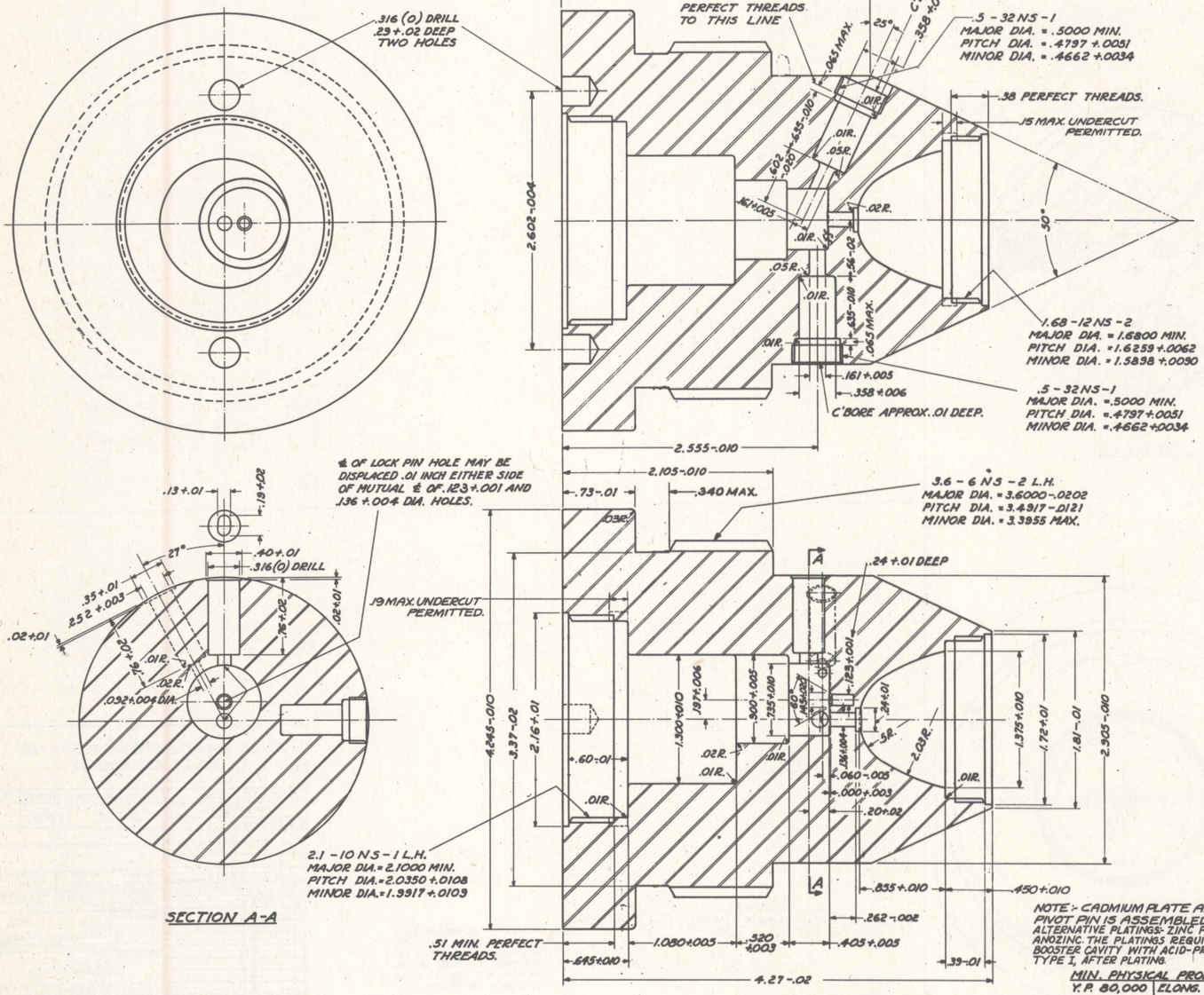
SUBMITTED:
LT. COL. ORD. DEPT. U. S. A.

EXAMINED:
LT. COL. ORD. DEPT. U. S. A.

APPROVED BY ORDER OF THE CHIEF OF ORDNANCE:
LT. COL. ORD. DEPT. U. S. A.

D

ORDNANCE DEPT. U. S. A.



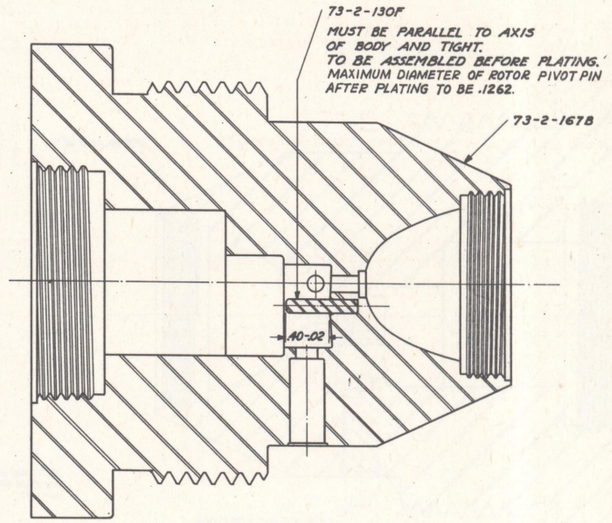
SECTION A-A

NOTE:- CADMIUM PLATE AFTER ROTOR PIVOT PIN IS ASSEMBLED. ALTERNATIVE PLATINGS:- ZINC PLUS CRONAK OR ANOZING. THE PLATINGS REQUIRE PAINTING OF BOOSTER CAVITY WITH ACID-PROOF BLACK PAINT TYPE I, AFTER PLATING.

MIN. PHYSICAL PROPERTIES

Y.P. 80,000	ELONG. IN 2 IN. 20%
T.S. 105,000	RED. OF AREA 40%

BODY 73-2-167B4
STEEL, WD 1050
ALTERNATIVE MATERIAL:- STEEL (WD 1050) FORGING, SPEC. 57-105
FINISH "f"



BODY PLATING ASSEMBLY 73-2-167 A 4

NOTICE: THIS DRAWING SHALL NOT BE USED NOR REPRODUCED EITHER WHOLLY OR IN PART EXCEPT WHEN AUTHORIZED IN CONNECTION WITH UNITED STATES GOVERNMENT PROCUREMENT.

REMOVE ALL BURRS.
SCALE INCHES: 2/1

FUZE, BASE DETONATING, M60
BODY DETAILS

APRIL 21, 1941

REVISIONS		
1	7-10-41	
2	5-5-42	
3	7-13-42	
4	8-15-43	

CLASS	DIVISION	DRAWING	FILE
73	2	167	

DRG. PERTAINS TO

D'FTSMAN	TRACER	L'DG. D'FTSMAN
R.B.B.	R.B.B.	K.L.
CHECKER		CHIEF D'FTSMAN
W.M.		

SUBMITTED:-
LT. COL., ORD. DEPT., U. S. A.

EXAMINED:-
LT. COL., ORD. DEPT., U. S. A.

APPROVED BY ORDER OF THE CHIEF OF ORDNANCE:-
LT. COL., ORD. DEPT., U. S. A.

D

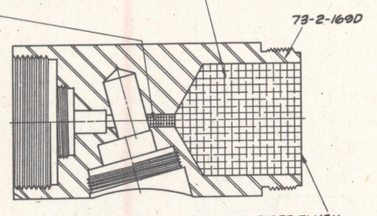
ORDNANCE DEPT., U. S. A.

CHARGE, BOOSTER LEAD 73-2-169B4

APPROX. 1.34 GRAINS (87. MILLIGRAMS) TETRYL
MAY CONTAIN NOT MORE THAN 2% GRAPHITE, GRADE I OR II
PRESS AT 10,000 LBS. PER SQ. IN. IN TWO APPROX. EQUAL INCREMENTS.

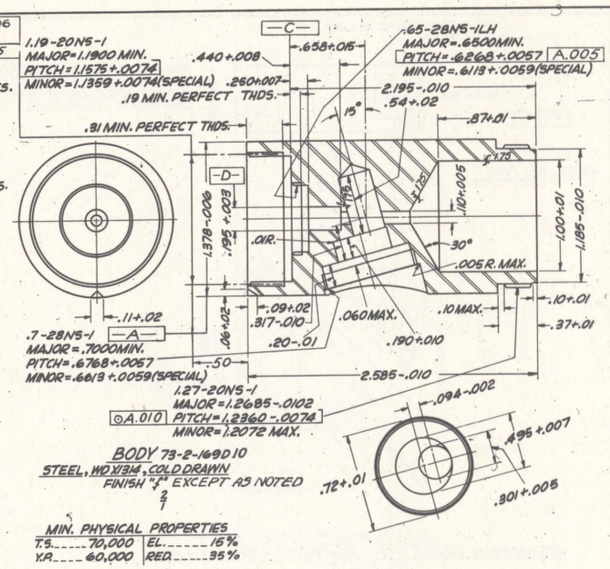
CHARGE, BOOSTER 73-2-169C5

APPROX. 310. GRAINS (20. GRAMS) TETRYL
MAY CONTAIN NOT MORE THAN 2% GRAPHITE, GRADE I OR II
ADVISORY:- SPECIFIC GRAVITY, 1.55 TO 1.60.
PRESS AT 10,000 LBS. PER SQ. IN. IN TWO APPROX. EQUAL INCREMENTS.



BODY LOADING ASSEMBLY 73-2-169A

2/1



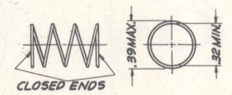
BODY 73-2-169D10

STEEL, WD W1314, COLD DRAWN
FINISH "F" EXCEPT AS NOTED

2/1

MIN. PHYSICAL PROPERTIES

T.S.	70,000	EL.	16%
Y.P.	60,000	RED.	35%



SPRING, SLIDER 73-2-169F6

STEEL, WIRE, MUSIC, SPRING, WD 1086W

2/1

REQUIREMENTS.

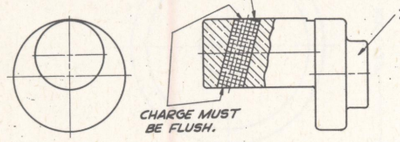
A-SOLID HEIGHT NOT OVER .105 MAX.
B-WIND LEFT HAND.
C-SEASON THOROUGHLY AFTER WINDING.
D-TREAT TO REMOVE EMBRITTLEMENT, WITHIN 24 HOURS AFTER PLATING.
E-MUST MEET ARMING LIMITS OF SLIDER AS SPECIFIED UNDER ASSEMBLY. (OCCASIONAL CHECK WILL BE MADE, AFTER COMPRESSION FOR AT LEAST 24 HOURS, AT THE ASSEMBLED HEIGHT.

ADVISORY DATA (MAY BE VARIED TO MEET REQUIREMENTS).

A-DIAMETER OF WIRE = .018 INCH.
B-TOTAL NUMBER OF COILS = 6.
C-NUMBER OF ACTIVE COILS = 3
D-ADJUST FREE HEIGHT TO MEET LOAD AT .32 INCH. SUGGESTED TRIAL FREE HEIGHT = .59 INCH.
E-LOAD AT .32 INCH = .80 ± .02 LB.
F-LOAD APPLIES AFTER SEASONING, PLATING AND TREATMENT TO REMOVE EMBRITTLEMENT.
G-SEASON BY HEATING TO 500° F. FOR 30 MINUTES.
H-TO REMOVE EMBRITTLEMENT, HEAT TO 300° F. FOR AT LEAST 30 MINUTES AS SOON AFTER PLATING AS PRACTICABLE.

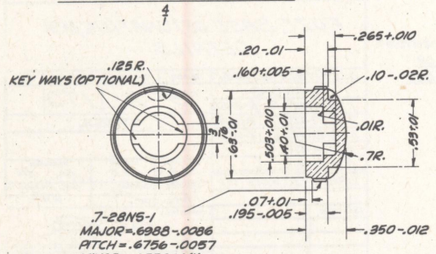
CHARGE, SLIDER 73-2-169H4

APPROX. 1.34 GRAINS (87. MILLIGRAMS) TETRYL
MAY CONTAIN NOT MORE THAN 2% GRAPHITE, GRADE I OR II
PRESS AT 10,000 LBS. PER SQ. IN. IN THREE APPROX. EQUAL INCREMENTS.



SLIDER LOADING ASSEMBLY 73-2-169G6

4/1

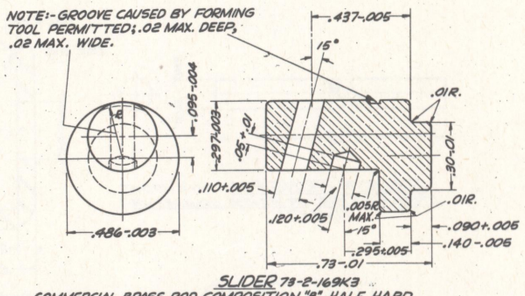


SCREW, RETAINING 73-2-169L7

COMMERCIAL BRASS, ROD, COMPOSITION "D", HALF HARD.
FINISH "F"

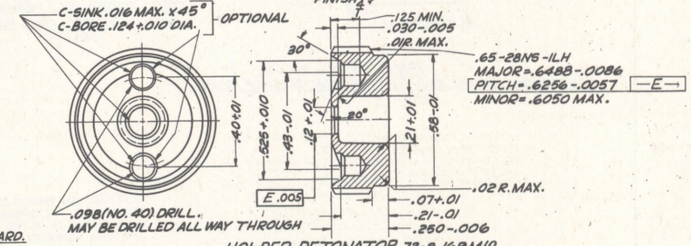
4/1

NOTE:- EJECTOR PIN IMPRESSION NOT TO EXCEED .01.



SLIDER 73-2-169K3

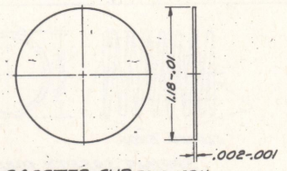
COMMERCIAL BRASS, ROD, COMPOSITION "B", HALF HARD.
FINISH "F"



HOLDER, DETONATOR 73-2-169M10

COMMERCIAL BRASS, ROD, COMPOSITION "D", HALF HARD
FINISH "F"

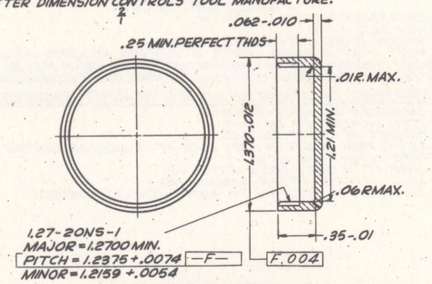
4/1



DISC, BOOSTER CUP 73-2-169N

ONION SKIN PAPER
DIAMETER DIMENSION CONTROLS TOOL MANUFACTURE.

4/1

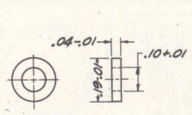


CUP, BOOSTER 73-2-169P10

COMMERCIAL BRASS, STRIP, COMPOSITION "C", HALF HARD

2/1

REMOVE ALL BURRS.



CUSHION, DETONATOR 73-2-169Q4

CORK-COMPOSITION, CLASS 3 OR 4
DIAMETER DIMENSIONS CONTROL TOOL MANUFACTURE

4/1

NOTE:- FOR PROTECTIVE FINISHES AND ALTERNATIVE MATERIALS SEE LIST OF PARTS.

FUZE, BASE, DETONATING. M91 DETAILS.

DECEMBER 31, 1941

REVISIONS			
1	3-27-42	6	1-8-44
2	6-27-42	7	6-2-44
3	9-18-42	8	8-15-45
4	4-24-43	9	10-1-45
5	7-7-43	10	5-23-49

CLASS	DIVISION	DRAWING	FILE
73	2	169	

TOLERANCE ON DIMENSIONS NOT OTHERWISE SPECIFIED
DECIMAL ±
FRACTIONAL ±
ANGULAR ±

D'FTSMAN	TRACER	ENGINEER
A.E.R.	G.m.	
CHECKER		ENGINEER
J.A.F.		

DRG. PERTAINS TO
73-2-239

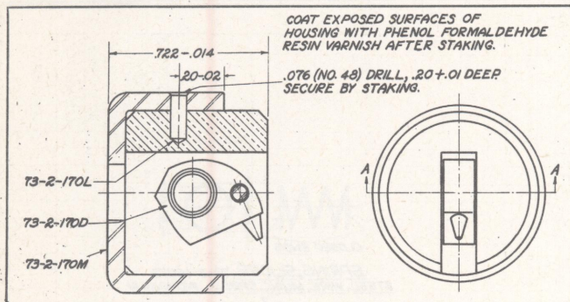
SUBMITTED:
COL., ORD. DEPT., U.S.A.

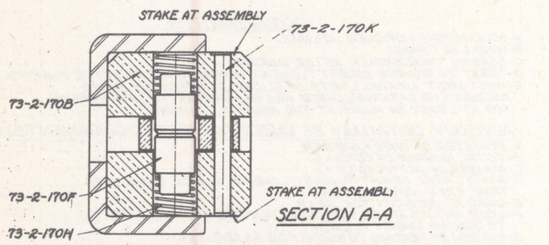
EXAMINED:
LT. COL., ORD. DEPT., U.S.A.

APPROVED BY ORDER OF THE CHIEF OF ORDNANCE:
COL., ORD. DEPT., U.S.A.

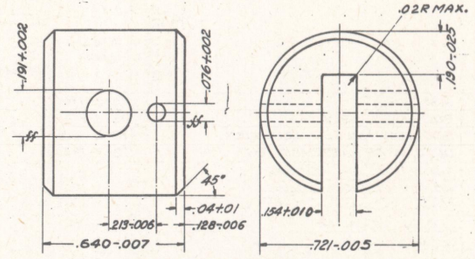
D

ORDNANCE DEPT., U.S.A.

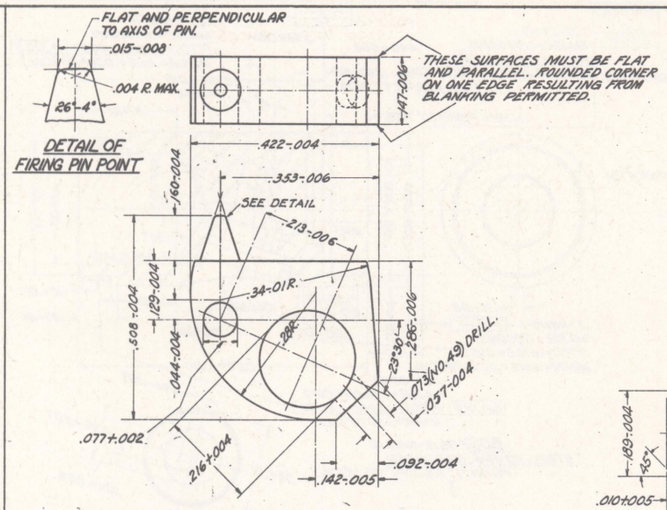




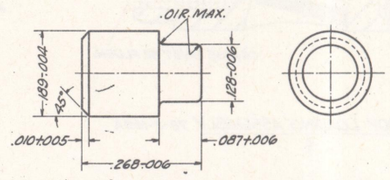
PERCUSSION PLUNGER ASSEMBLY 73-2-170A5
MUST NOT ARM AT 1700 R.P.M.
MUST ARM AT 3600 R.P.M.



BODY, PLUNGER 73-2-170B6
COMMERCIAL BRASS, ROD, COMPOSITION "B", HALF HARD
FINISH "J"



PIN, FIRING 73-2-170D7
COMMERCIAL BRASS, STRIP, COMPOSITION "C", HALF HARD
FINISH "J"



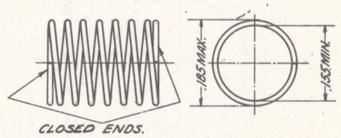
PIN, SAFETY 73-2-170F6
COMMERCIAL BRASS, ROD, COMPOSITION "B", HALF HARD
FINISH "J"



SPRING, RESTRAINING 73-2-170G5
STEEL, WIRE, MUSIC SPRING, WD.1085W

REQUIREMENTS
A-SOLID HEIGHT NOT OVER .18 INCH.
B-WIND LEFT HAND.
C-SEASON THOROUGHLY AFTER WINDING.
D-TREAT, TO REMOVE EMBRITTLEMENT, WITHIN 24 HOURS AFTER PLATING.
E-LOAD AT .21 INCH = 8 OZ. MAX.
F-LOAD AT ASSEMBLED HEIGHT .38 INCH = 3 OZ. MIN. (OCCASIONAL CHECK WILL BE MADE AFTER COMPRESSION FOR AT LEAST 24 HOURS, AT THE ASSEMBLED HEIGHT).
G-LOADS APPLY AFTER SEASONING, PLATING AND TREATMENT TO REMOVE EMBRITTLEMENT.

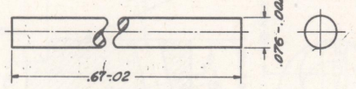
ADVISORY DATA (MAY BE VARIED TO MEET REQUIREMENTS).
A-DIAMETER OF WIRE = .034 INCH.
B-TOTAL NUMBER OF COILS = 4½
C-NUMBER OF ACTIVE COILS = 4½
D-ADJUST FREE HEIGHT TO MEET LOAD REQUIREMENTS. SUGGESTED TRIAL FREE HEIGHT = .6 INCH
E-SEASON BY HEATING TO 300°F. FOR 30 MINUTES.
F-TO REMOVE EMBRITTLEMENT, HEAT TO 300°F. FOR AT LEAST 30 MINUTES AS SOON AFTER PLATING AS PRACTICABLE.



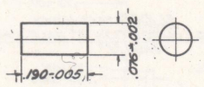
SPRING, SAFETY PIN 73-2-170H6
BRASS WIRE, GRADE "C"

REQUIREMENTS
A-SOLID HEIGHT NOT OVER .08 INCH.
B-WIND LEFT HAND.
C-SEASON THOROUGHLY AFTER WINDING.
D-MUST MEET ARMING LIMITS OF SPRING HOUSING AS SPECIFIED UNDER PERCUSSION PLUNGER ASSEMBLY (OCCASIONAL CHECK WILL BE MADE AFTER COMPRESSION FOR AT LEAST 24 HOURS AT THE ASSEMBLED HEIGHT)

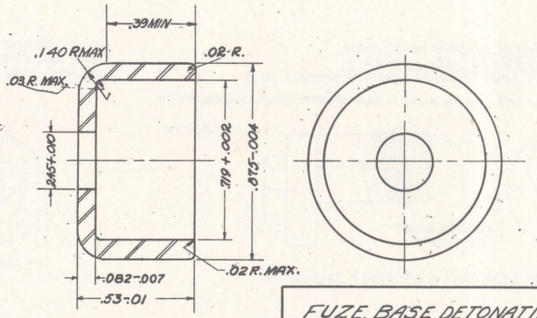
ADVISORY DATA (MAY BE VARIED TO MEET REQUIREMENTS)
A-DIAMETER OF WIRE = .009 INCH.
B-TOTAL NUMBER OF COILS = 7
C-NUMBER OF ACTIVE COILS = 5
D-ADJUST FREE HEIGHT TO MEET LOAD AT .12 INCH. SUGGESTED TRIAL FREE HEIGHT = .3 INCH.
E-LOAD AT .12 INCH = 200 ± 15 GRAINS.
F-LOAD APPLIES AFTER SEASONING.
G-SEASON BY HEATING TO 400°F. FOR 30 MINUTES.



FULCRUM, FIRING PIN 73-2-170K5
STEEL, WD X 1314 OR WD 1095 COLD DRAWN.
FINISH "J"



PIN 73-2-170L6
COMMERCIAL BRASS, ROD, COMPOSITION "B", HALF HARD
FINISH "J"



HOUSING, PLUNGER 73-2-170M7
STEEL, WDX1314, COLD DRAWN OR WD1010 OR WD1020, COLD ROLLED
FINISH "J"

FOR PROTECTIVE FINISHES AND ALTERNATIVE MATERIALS SEE LIST OF PARTS.

REMOVE ALL BURRS.

NOTICE: THIS DRAWING SHALL NOT BE USED NOR REPRODUCED EITHER WHOLLY OR IN PART EXCEPT WHEN AUTHORIZED IN CONNECTION WITH UNITED STATES GOVERNMENT PROCUREMENT.

SCALE, INCHES, 1, ½, ¼, ⅛

FUZE, BASE DETONATING, M91 DETAILS.

DECEMBER 31, 1941

REVISIONS				CLASS	DIVISION	DRAWING	FILE
1	2-14-42	6	6-2-44	73	2	170	
2	3-27-42	7	8-15-45	SYMBOL			
3	8-27-42	8	10-1-45				
4	4-24-43						
5	1-8-44						

DRAWN	TRACED	ENGINEER
A.E.R.	A.E.R.	

CHECKED	CHECKED	CHIEF DRAFTSMAN
J.A.F.		

DRG. PERTAINS TO
73-2-230

SUBMITTED:
CHIEF, ORD. DEPT., U. S. A.

EXAMINED:
LT. COL., ORD. DEPT., U. S. A.

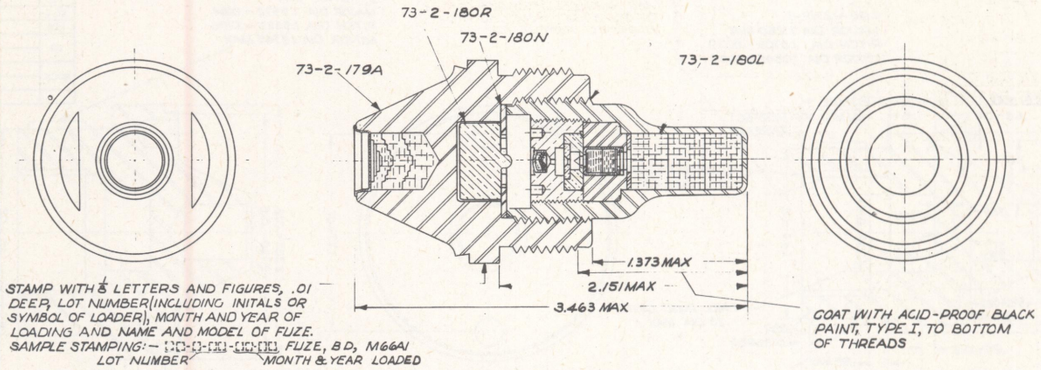
APPROVED BY ORDER OF THE CHIEF OF ORDNANCE:
COL., ORD. DEPT., U. S. A.

D

ORDNANCE DEPT. U. S. A.

HEAT TREATMENT AND FINAL FINISH

ASSEMBLE TIGHTLY AND SECURE BY STAKING IN TWO PLACES



ASSEMBLY 73-2-178A5

LIST OF PARTS

LINE NO.	NAME OF PART	NUMBER REQ'D PER COMPONENT	PIECE-MARK	MATERIAL: SIZE OR FORM	MATERIAL: KIND	MATERIAL: GRADE	MATERIAL: SPEC NO.	APPROX. MATE UNIT WEIGHT (GRAINS)	APPROX. GROSS WT. OF RAW STOCK PER 1000 ASSEMBLIES	REMARKS
1	ASSEMBLY		73-2-178A				PXS-1008	(1.00 LB)		
2	BODY ASSEMBLY		73-2-179A					4201		
3	BOOSTER HOLDER ASSEMBLY		73-2-180L					2015		
4	DETONATOR ASSEMBLY M17	1	73-2-184A					10		
5	PRIMER, NO. 26, ASSEMBLY	1	A-131					5		
6	PRIMER HOLDER ASSEMBLY		73-2-180A					408		
7	DELAY CHARGE HOLDER ASSEMBLY		73-2-180F					76		
8	CHARGE, BOOSTER	1	73-2-180K		TETRYL	I, CLASS a	JAN-T-339	78		
9	CHARGE, DELAY	1	73-2-180G		BLACK POWDER	A-5	JAN-P-223	1		
10										
11	CHARGE, IGNITER	1	73-2-179B		IGNITER COMPOSITION "K"		50-54-17	20		
12	CHARGE, TRACER	1	73-2-179C		TRACER COMPOSITION, M3		50-54-17	49		
13	CUP, CLOSING	1	75-14-379G							
14										
15	CUSHION, DETONATOR	1	73-2-180E	SHEET	COMPRESSED CORK		COMMERCIAL			
16	BODY	1	73-2-179D	BAR	CHROMIUM MOLYBDENUM STEEL	FS 4140	QQ-S-671	4130		(a)(h)
17										
18										
19										
20										
21										
22	HOLDER, BOOSTER	1	73-2-180M	BAR	CHROMIUM MOLYBDENUM STEEL	FS 4140	QQ-S-671	1298		(a)(h)
23	HOLDER, DETONATOR	1	73-2-180C	BAR	STEEL	FSX 1314 OR FSX 1315	QQ-S-671	220		(e)(h)
24	HOLDER, PRIMER	1	73-2-180B	ROD	BRASS	B, HALF HARD	QQ-B-611	327		(c)
25	HOLDER, DELAY CHARGE	1	73-2-180H	ROD	BRASS	B, HALF HARD	QQ-B-611	69		
26										
27										
28	PIN, FIRING	1	73-2-180R	ROD	BRASS	B, HALF HARD	QQ-B-611	324		
29	WASHER, BOOSTER	1	73-2-180P	ROLL	CLOTH, FUZE		JAN-C-367	1		
30	WASHER, SAFETY	1	73-2-180N	STRIP	STEEL	WD 1010 OR 1020	57-136	38		(h)
31	WASHER, RETAINING	1	73-2-180D	ROD	BRASS	B, HALF HARD	QQ-B-611	6		(d)
32					SHELLAC VARNISH TYPE II	B, MEDIUM BODY	TT-V-91			
33					PAINT, ACID-PROOF, BLACK	TYPE I	JAN-P-450			
34					GRAPHITE	I OR II	JAN-G-155			
35					NRC COMPOUND	A	JAN-C-388			
36					SHELLAC & ANILINE DYE		50-11-148			

(a) ALTERNATIVE MATERIAL:- STEEL, FS 4150, SPEC QQ-S-671.
(c) TENSILE STRENGTH AND YIELD POINT SPECIFIED IN TABLE II SPEC QQ-B-611 ARE NOT A REQUIREMENT FOR PRIMER HOLDERS.
(d) ALTERNATIVE MATERIAL:-COMMERCIAL BRASS, STRIP, COMPOSITION 'C', QUARTER-HARD, QQ-B-611.
(e) ALTERNATIVE MATERIAL:- STEEL, FS 1020 TO 1040 INCL, SPEC QQ-S-671.
(h) PROTECTIVE FINISH, TYPE I, CLASS RS, RSC OR TS, SPEC 57-0-2.

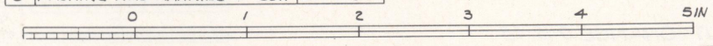
LIST OF SPECIFICATIONS

LINE NO.	LIST OF SPECIFICATIONS	SPEC NUMBER *	REQUIRED BY
1	AMMUNITION, EXCEPT SMALL ARMS AMMUNITION, GENERAL SPEC FOR	50-0-1	DWG 73-2-178
2			
3			
4			
5	BRASS, COMMERCIAL; BARS, PLATES, RODS, SHAPES, SHEETS AND STRIPS	QQ-B-611	DWG 73-2-180
6	CLOTH, FUZE	JAN-C-367	DWG 73-2-180
7	GRAPHITE	JAN-G-155	DWG 73-2-180
8	FUZES, B D, M66A1 & M68, METAL PARTS FOR	50-41-6	DWG 73-2-180
9	FUZES, B D, M66A1 & M68, LOADING ASS'Y & PACKING	PXS 1008	DWG 73-2-178
10	FINISHES, PROTECTIVE, FOR IRON & STEEL PARTS	57-0-2	DWG 73-2-178
11			
12			
13			
14	METALS; GENERAL SPECIFICATION FOR INSPECTION OF	QQ-M-151	QQ-B-611
15	NRC COMPOUND	JAN-C-388	DWG 73-2-180
16	POWDER, BLACK	JAN-P-223	DWG 73-2-180
17	PAINT, ACID-PROOF, BLACK, FOR AMMUNITION	JAN-P-450	DWG 73-2-178
18	SHELLAC AND ANILINE DYE MIXTURE	50-11-148	DWG 73-2-180
19			
20	STEEL, CARBON AND ALLOY, BARS	QQ-S-671	DWG 73-2-180
21	STEEL, CARBON AND ALLOY; SHEETS AND STRIPS	57-136	DWG 73-2-180
22	TETRYL	JAN-T-339	DWG 73-2-180
23	TEXTILES; GENERAL SPECIFICATIONS, TEST METHODS	CCC-T-191	JAN-C-367
24	TRACER COMPOSITION (RED), M3, & IGNITER COMPOSITION "K"	50-54-17	DWG 73-2-179
25	VARNISH; SHELLAC	TT-V-91	DWG 73-2-180

* THE SPECIFICATION NUMBERS SHOWN ARE BASIC NUMBERS ONLY. WHEN A SPECIFICATION IS REVISED A LETTER IS AFFIXED TO ITS BASIC NUMBER. SPECIFICATIONS REFERRED TO IN THESE SPECIFICATIONS AND NOT LISTED HEREON, SHALL NOT APPLY EXCEPT FOR THOSE REFERRED TO IN PXS-1008.

LIST OF DRAWINGS

LINE NO.	LIST OF DRAWINGS	DRAWING NUMBER
1	ASSEMBLY	73-2-178
2	DETAILS	73-2-179
3	DETAILS	73-2-180
4	CLOSURES	75-14-379
5	DETONATOR, ASSEMBLY M17	73-2-184
6	FIBER CONTAINER, M103	75-14-392
7	BOX, PACKING	76-1-522B
8	PACKING AND MARKING OF BOX	20-4-361



NOTICE:- THIS DRAWING SHALL NOT BE USED NOR REPRODUCED EITHER WHOLLY OR IN PART EXCEPT WHEN AUTHORIZED IN CONNECTION WITH UNITED STATES GOVERNMENT PROCUREMENT.

FUZE, BASE DETONATING, M66A1 ASSEMBLY

MAY 6, 1942

REVISIONS		CLASS	DIVISION	DRAWING	FILE
5	8-15-45	73	2	178	
6	8-16-48				

TOLERANCE ON DIMENSIONS NOT OTHERWISE SPECIFIED
DECIMAL ±
FRACTIONAL ±
ANGULAR ±

DRG. PERTAINS TO

D'FTSMAN	TRACER	ENGINEER
AER	REG	
CHECKER		ENGINEER
A.C.J.		

SUBMITTED: D.C. Beeman, ORD ENG, ORD. DEPT., U.S.A.
EXAMINED: C.R. Dutton, COL, ORD. DEPT., U.S.A.
APPROVED BY ORDER OF THE CHIEF OF ORDNANCE: J.H. Stacy, COL, ORD. DEPT., U.S.A.

D

ORDNANCE DEPT., U.S.A.

SUPERSEDES 73-2-178 WITHOUT CHANGE 9-16-48

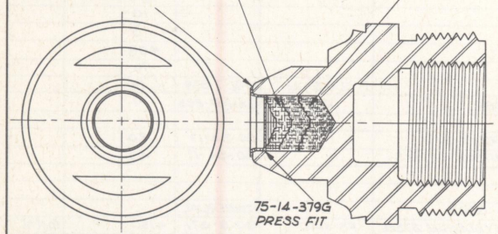
HEAT TREATMENT AND FINAL FINISH

CHARGE, TRACER 73-2-179C6

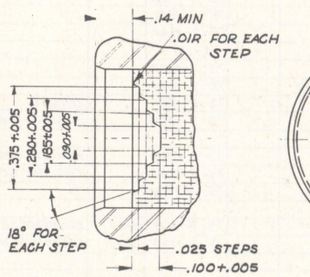
APPROX 49 GRAINS (3.2 GRAMS) TRACER COMPOSITION M3
ADVISORY:- TWO SOLID PELLETS, DIA=.49, LENGTH=.25

CHARGE, IGNITER 73-2-179B6

APPROX 20 GRAINS (1.3 GRAMS) IGNITER COMPOSITION "K"
ADVISORY:- ONE SOLID PELLET; DIA=.49, LENGTH=.18



TO SEAT CLOSING CUP IN TRACER CAVITY USE EXPANSION PUNCH, PX-13-774, AT A LOAD OF APPROXIMATELY 3000 LBS.



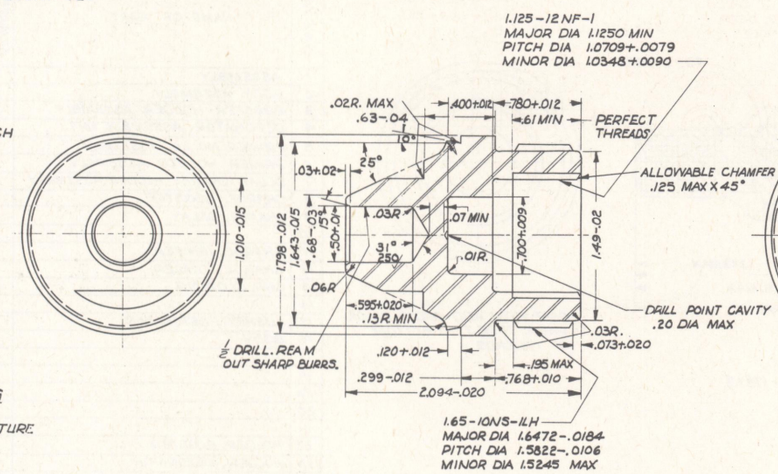
ENLARGED SECTION SHOWING FORMATION OF CAVITY
DIMENSIONS CONTROL TOOL MANUFACTURE

BODY ASSEMBLY 73-2-179A6
(FOR M66A1 FUZE)

BODY ASSEMBLY 73-2-179E6
(FOR M68 FUZE)

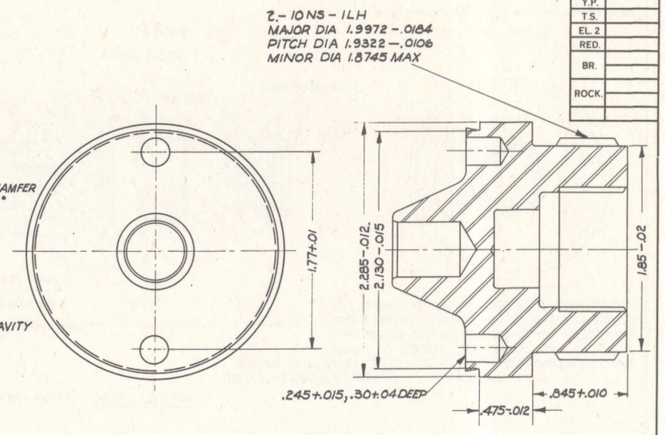
ADVISORY TRACER LOADING INSTRUCTIONS

PRESS SEPARATELY TRACER CHARGE AND IGNITER CHARGE AT 110,000 LBS PER SQ IN., ALLOWING LOAD TO DWELL FROM 4 TO 6 SECONDS. PUNCH USED FOR PRESSING TRACER AND IGNITER CHARGES TO BE FORMED AS SHOWN IN ENLARGED SECTION



BODY (M66A1) 73-2-179D7

CHROMIUM MOLYBDENUM STEEL, FS 4140, HOT ROLLED, ROUGH TURNED OR COLD FINISH
FINISH 125 (UNLESS OTHERWISE NOTED)
ROCKWELL C, 32 MIN TO 41 MAX
NOTE:- PERFECT THREAD FORM OF 1.125-12NF-1 THREAD WILL BE CHECKED ONLY TO .568 MIN IF THREAD IS FORMED BY TAPPING WITH TAP HAVING AT LEAST ONE PITCH LEAD.



BODY (M68) 73-2-179F7

FOR ALL OTHER INFORMATION SEE BODY, 73-2-179D

NOTE:- FOR PROTECTIVE FINISHES AND ALTERNATIVE MATERIALS SEE DWGS 73-2-181 AND 73-2-178.

NOTES:-
A- THE FOLLOWING MAXIMUM ECCENTRICITIES WILL BE PERMITTED. (WHEN MEASURING ECCENTRICITY BY MEANS OF A DIAL INDICATOR, THE TOTAL READING OF THE DIAL IS TWICE THE ECCENTRICITY).

BODY, 73-2-179D
1- BETWEEN FIRING PIN CAVITY (.700+.009 DIA) AND TRACER CAVITY (.500+.010 DIA), .004
2- BETWEEN EXTERNAL THREADS (1.65-10NS-1LH) AND INTERNAL THREADS (1.125-12NF-1), .006
3- BETWEEN EXTERNAL THREADS (1.65-10NS-1LH) AND FLANGE (1.798-.012 DIA), .005

BODY, 73-2-179F
1- BETWEEN FIRING PIN CAVITY (.700+.009 DIA) AND TRACER CAVITY (.50+.01 DIA), .004
2- BETWEEN EXTERNAL THREADS (2.-10NS-1LH) AND INTERNAL THREADS (1.125-12NF-1), .006
3- BETWEEN EXTERNAL THREADS (2-10NS-1LH) AND FLANGE (2.285-.012 DIA), .005

REMOVE ALL BURRS

0 1 INCH
0 1 2 3 4 5 INCHES

SUPERSEDES 73-2-179 WITHOUT CHANGE 9-16-48

NOTICE:- THIS DRAWING SHALL NOT BE USED NOR REPRODUCED EITHER WHOLLY OR IN PART EXCEPT WHEN AUTHORIZED IN CONNECTION WITH UNITED STATES GOVERNMENT PROCUREMENT.

PHYSICAL PROPERTIES	
Y.P.	
T.S.	
EL. 2	
RED.	
BR.	
ROCK.	

FUZE, BASE DETONATING, M66A1 & M68 DETAILS

MAY 6, 1942

CLASS	DIVISION	DRAWING	FILE
73	2	179	

REVISIONS

6	8-15-45
7	9-16-48

TOLERANCE ON DIMENSIONS NOT OTHERWISE SPECIFIED
DECIMAL ±
FRACTIONAL ±
ANGULAR ±

D'FTSMAN	TRACED	ENGINEER
D.C.S.	REG	

CHECKER	ENGINEER
A.C.J.	

SUBMITTED:- D. R. Belcher, ORD ENG, ORD. DEPT., U.S.A.
EXAMINED:- C. R. Datton, COL, ORD. DEPT., U.S.A.
APPROVED BY ORDER OF THE CHIEF OF ORDNANCE:- J. H. Stamler, COL, ORD. DEPT., U.S.A.

DRG. PERTAINS TO

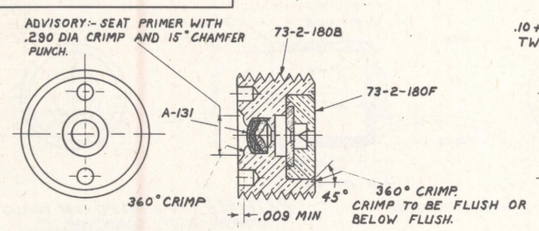
73-2-178	M66A1
73-2-181	M68

D

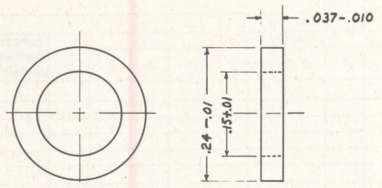
ORDNANCE DEPT., U.S.A.

HEAT TREATMENT AND FINAL FINISH

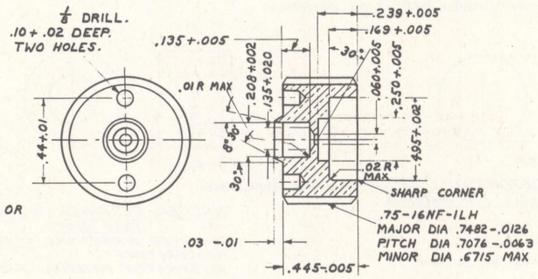
PHYSICAL PROPERTIES	
Y.P.	
T.S.	
EL. 2	
RED.	
BR.	
ROCK.	



PRIMER HOLDER ASSEMBLY 73-2-180 A5

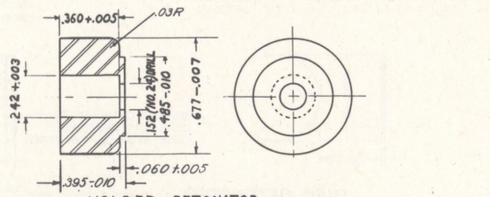


CUSHION, DETONATOR 73-2-180E
COMPRESSED CORK, COMMERCIAL DIAMETER DIMENSIONS CONTROL TOOL MANUFACTURE.



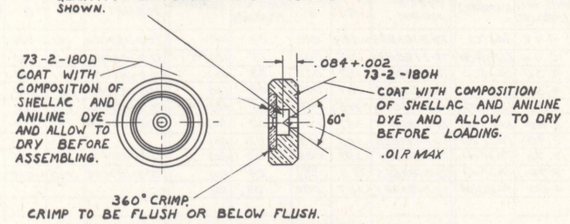
HOLDER, PRIMER 73-2-180B8
COMMERCIAL BRASS, ROD, COMPOSITION "B", HALF HARD
FINISH 125

ECCENTRICITY BETWEEN THREADS (.75-16NF-1LH) AND CYLINDRICAL SURFACE (.208 +.002 DIA); .004 (.008 INDICATOR READING).

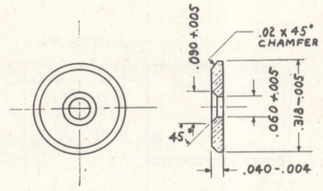


HOLDER, DETONATOR 73-2-180C8
STEEL, FS X1314 OR FSX1315. COLD DRAWN
FINISH 125

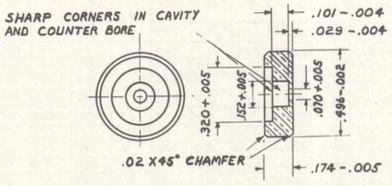
CHARGE, DELAY 73-2-10867
APPROX 1. GRAIN (64.8 MILLIGRAMS) ARMY BLACK POWDER GRADE A-5 (35-100 MESH) UNGLAZED.
PRESS AT APPROX 60,000 LBS PER SQ INCH
QUANTITY OF POWDER TO BE ADJUSTED TO FILL CAVITY AS SHOWN.



DELAY CHARGE HOLDER ASSEMBLY 73-2-180F4



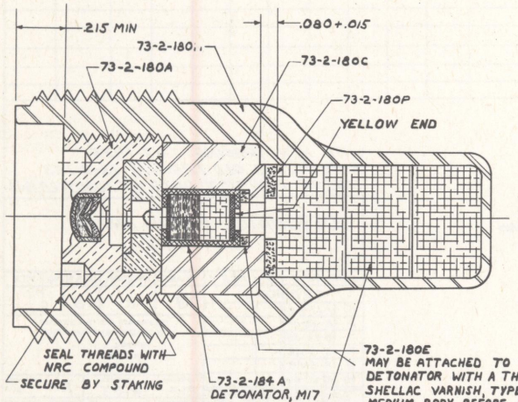
WASHER, RETAINING 73-2-180D8
COMMERCIAL BRASS, ROD, COMPOSITION "B", HALF HARD
FINISH 125



HOLDER, DELAY CHARGE 73-2-180H3
COMMERCIAL BRASS, ROD, COMPOSITION "B", HALF HARD
FINISH 125

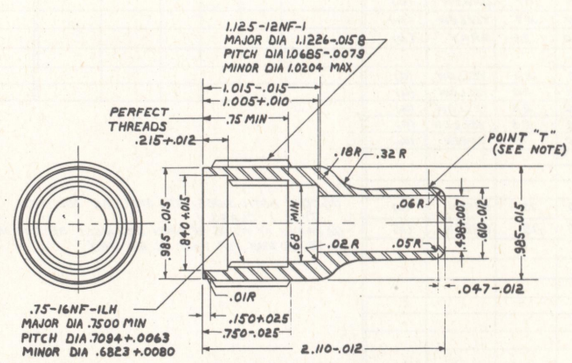
NOTE:- FOR PROTECTIVE FINISHES AND ALTERNATIVE MATERIALS SEE DRAWINGS 73-2-181 AND 73-2-178

NOTICE:- THIS DRAWING SHALL NOT BE USED NOR REPRODUCED EITHER WHOLLY OR IN PART EXCEPT WHEN AUTHORIZED IN CONNECTION WITH UNITED STATES GOVERNMENT PROCUREMENT.



CHARGE, BOOSTER 73-2-180K8
78-.4 GRAINS (5.05 -.30 GRAMS) TETRYL, GRADE I, CLASS a
MAY CONTAIN NOT MORE THAN 2% GRAPHITE, GRADE I OR II. SPECIFIC GRAVITY 1.50 TO 1.60 ALL PLACES.

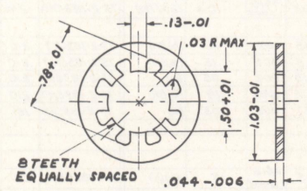
BOOSTER HOLDER ASSEMBLY 73-2-180L8
STAKE DETONATOR IN DETONATOR HOLDER BY 3 EQUALLY SPACED INDENTATIONS, OPTIONAL.



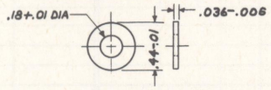
HOLDER, BOOSTER 73-2-180M8
CHROMIUM MOLYBDENUM STEEL, FS 4140, HOT ROLLED, ROUGH TURNED OR COLD FINISH
FINISH 125
ROCKWELL "C", 32 MIN TO 41 MAX

ECCENTRICITY BETWEEN .680 MIN CYLINDRICAL SURFACE AND .498 +.007 CYLINDRICAL SURFACE .005 MAX (.010 INDICATOR READING).

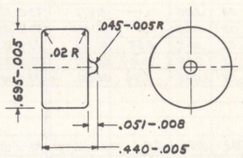
NOTE: ECCENTRICITY BETWEEN THREADS (1.125-12NF-1) AND CYLINDRICAL SURFACE (.61-.01 DIA) AT POINT "T" .006 (.012 INDICATOR READING)



WASHER, SAFETY 73-2-180N6
STEEL, WD1010 OR WD 1020
ADVISORY:- ROCKWELL HARDNESS:-B57 TO B70 MUST BE FLAT WITHIN .005 RUNOUT NOT TO EXCEED .010; MUST MEET ARMING REQUIREMENTS OF APPLICABLE SPECIFICATION.



WASHER, BOOSTER 73-2-180P3
CLOTH, FUZE
DIA DIMENSIONS CONTROL TOOL MANUFACTURE



PIN, FIRING 73-2-180R5
COMMERCIAL BRASS, ROD, COMPOSITION "B" HALF HARD
FINISH 125

SUPERSEDES 73-2-180 WITHOUT CHANGE 9-16-48

REMOVE ALL BURRS

SCALE, INCHES, ½, 1/4, ⅛

FUZE, BASE DETONATING M66A1 AND M68, DETAILS

MAY 6, 1942

REVISIONS					
7	6-7-45				
8	9-16-48				

DRG. PERTAINS TO
73-2-178

CLASS	DIVISION	DRAWING	FILE
73	2	180	

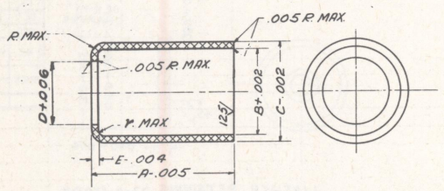
TOLERANCE ON DIMENSIONS NOT OTHERWISE SPECIFIED
DECIMAL ±
FRACTIONAL ±
ANGULAR ±

D'FTSMAN	TRACER	ENGINEER
J.F.R.	F.C.B	
CHECKER		ENGINEER
A.G.J.		

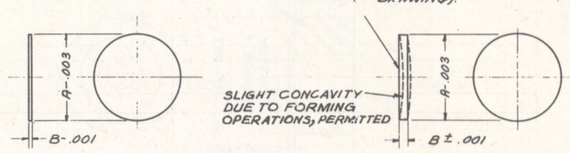
SUBMITTED:- D.R. Brennan, ORD ENG, ORD. DEPT. U.S.A.
EXAMINED:- C.R. Dutton, COL, ORD. DEPT. U.S.A.
APPROVED BY ORDER OF THE CHIEF OF ORDNANCE:- J.H. Hauch, COL, ORD. DEPT. U.S.A.

D

ORDNANCE DEPT., U.S.A.



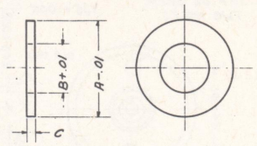
CUP, DETONATOR 73-2-183A□ (SEE TABLE)
SEE TABLE FOR MATERIAL
IF MANUFACTURED BY COLD EXTRUSION, FINISH 125 IS NOT REQUIRED ON END OF CUP. (ALUMINUM ONLY)



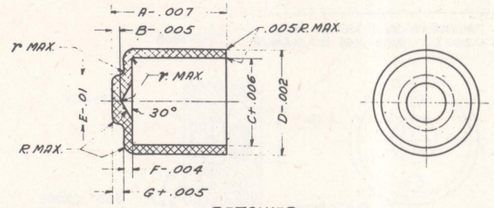
DISC, DETONATOR 73-2-183B□ (SEE TABLE)
SEE TABLE FOR MATERIAL
DIAMETER DIMENSION CONTROLS TOOL MANUFACTURE.

DISC, DETONATOR CLOSING 73-2-183C□ (SEE TABLE)
SEE TABLE FOR MATERIAL

REMOVE ALL BURRS.



WASHER, RETAINER 73-2-183D□ (SEE TABLE)
FUZE CLOTH
DIAMETER DIMENSIONS CONTROL TOOL MANUFACTURE.
ALTERNATIVE MATERIAL:- FELT, NO. 10



RETAINER 73-2-183E□ (SEE TABLE)
ALUMINUM-ALLOY, CONDITION "T"
FINISH 125
ALTERNATIVE MATERIAL:- ALUMINUM-ALLOY, CONDITION A, TO BE MANUFACTURED BY COLD EXTRUSION.

LINE NO.	DETONATOR DESIGNATION	DETONATOR ASSEMBLY DRAWING NUMBER	CUP, DETONATOR: PIECE-MARK	DIMENSIONS A	B	C	D	E	R	r	APPROX. UNIT WT. (GRAINS)	REMARKS	DISC, DETONATOR: PIECE-MARK	DIMENSIONS A	B	APPROX. UNIT WT. (GRAINS)	REMARKS	DISC, DETONATOR CLOSING: PIECE-MARK	DIMENSIONS A	B	APPROX. UNIT WT. (GRAINS)	COLOR	REMARKS	WASHER, RETAINER: PIECE-MARK	DIMENSIONS A	B	C	APPROX. UNIT WT. (GRAINS)	REMARKS	RETAINER: PIECE-MARK	DIMENSIONS A	B	C	D	E	F	G	R	r	APPROX. UNIT WT. (GRAINS)	REMARKS
1	M13	82-3-282	73-2-183AA1	.578	.190	.239	.11	.027	.02	.005	7.12	(a)(c)	73-2-183BA5	.187	.002	.03	(a)	73-2-183CA6	.181	.010	.18	GREEN	(a)																		
2	M15A2	82-3-337	73-2-183AB7	.578	.217	.239	.11	.013	.02	.005	10.46	(b)(g)(e)(f)	73-2-183BB6	.215	.002	.15	(b)(m)	73-2-183CB6	.210	.010	.75	GREEN	(b)																		
3	M17	73-2-184	73-2-183AC1	.378	.190	.239	.11	.027	.02	.005	4.50	(a)(c)	73-2-183BA5	.187	.002	.03	(a)	73-2-183CC6	.181	.010	.18	YELLOW	(a)																		
4	M16	73-2-185	73-2-183AC7	.378	.190	.239	.11	.027	.02	.005	4.50	(a)(c)	73-2-183BA5	.187	.002	.03	(a)	73-2-183CA6	.181	.010	.18	GREEN	(a)																		
5	M19A2	73-2-186	73-2-183AD1	.405	.217	.239	.11	.013	.02	.005	7.55	(b)(e)(f)(g)	73-2-183BB6	.215	.002	.15	(b)(m)	73-2-183CB6	.210	.010	.75	GREEN	(b)																		
6	M20	73-2-187	73-2-183AE1	.595	.154	.190	.10	.020	.015	.005	3.84	(a)(d)	73-2-183BC5	.153	.002	.02	(a)	73-2-183CD6	.145	.010	.12	GREEN	(a)																		
7	M21	73-2-188	73-2-183AF1	.430	.154	.190	SOLID BOTTOM	.020	.015	.005	2.90	(a)(d)	73-2-183BD5	.145	.002	.02	(a)					SOLID BOTTOM																		
8	M22	73-2-189	73-2-183AG1	.423	.154	.190	.10	.020	.015	.005	2.76	(a)(d)	73-2-183BC5	.153	.002	.02	(a)	73-2-183CD6	.145	.010	.12	GREEN	(a)																		
9	M23	73-2-190	73-2-183AG7	.423	.154	.190	.10	.020	.015	.005	2.76	(a)(d)	73-2-183BE5	.153	.020 ±.002	.24	(a)	73-2-183CE6	.145	.010	.12	BLACK	(a)																		
10	M24	73-2-191	73-2-183AH7	.400	.190	.239	.11	.027	.02	.005	4.60	(a)(c)(p)	73-2-183BA5	.187	.002	.03	(a)					CAVITY		73-2-183DA5	.19	.09	.036	.10		73-2-183EA5	.167	.023	.145	.189	.10	.022	.025	.025	.01	1.30	
11																																									
12																																									
13																																									
14	M28	73-2-199	73-2-183AL7	.776	.190	.239	.11	.027	.02	.005	9.43	(a)(c)	73-2-183BA5	.187	.002	.03	(a)	73-2-183CA6	.181	.010	.18	GREEN	(a)																		
15	M29	73-2-204	73-2-183AM7	.418	.128	.143	.08	.010	.01	.005	.77	(a)	73-2-183BG5	.125	.002	.012	(a)	73-2-183CF6	.125	.010	.09	GREEN	(a)																		
16	M30	73-2-205	73-2-183AM1	.418	.128	.143	.08	.010	.01	.005	.77	(a)	73-2-183BG5	.125	.002	.012	(a)	73-2-183CG6	.125	.010	.09	YELLOW	(a)																		
17	M31	73-2-211	73-2-183AB7	.578	.217	.239	.11	.013	.02	.005	10.46	(b)(g)(e)(f)	73-2-183BH6	.215	.0010 ±.0008	.04	(b)(m)	73-2-183CH6	.210	.010	.75	GRAY	(b)																		
18																																								
19	T6	73-2-226	73-2-183AP7	.994	.217	.239	.11	.013	.02	.005	---	(a)(f)	73-2-183BM8	.215	.002	.15	(b)(m)	73-2-183CK7	.210	.010	.24	YELLOW	(a)																		
20	T7	73-2-227	73-2-183AQ7	.578	.217	.239	.11	.013	.02	.005	---	(a)(f)	73-2-183BB6	.215	.002	.15	(b)(m)	73-2-183CK7	.210	.010	.24	YELLOW	(a)																		
21	M35	73-2-245	73-2-183AT7	.405	.217	.239	.11	.013	.02	.005	2.52	(a)(f)	73-2-183BK7	.215	.002	.05	(a)	73-2-183CL7	.210	.010	.25	YELLOW	(a)																		
22	T9	73-2-225	73-2-183AN7	.400	.217	.239	.11	.013	.02	.005	6.67	(a)(f)	73-2-183BM8	.215	.002	.15	(b)(m)	73-2-183CK7	.210	.010	.24	YELLOW	(a)																		
23	M37	73-2-231	73-2-183AS7	.482	.190	.239	.11	.027	.02	.005	5.74	(a)(c)	73-2-183BA5	.187	.002	.03	(a)	73-2-183CA6	.181	.010	.18	GREEN	(a)																		
24	M38	73-2-279	(FOR DETAILS SEE ASSEMBLY)																																					
25																																								
26																																								
27	M41	73-2-228	73-2-183AR7	.378	.217	.239	.11	.013	.02	.005	7.43	(a)(e)(f)(g)	73-2-183BL8	.215	.0010 ±.0002	.15	(b)(n)	73-2-183CB6	.210	.010	.75	GREEN	(b)																		
28	M42	73-2-323	73-2-183AU9	.470	.217	.239	.11	.013	.02	.005	8.53	(b)(e)(f)(g)	73-2-183BB6	.215	.002	.15	(b)(n)	73-2-183CB6	.210	.010	.75	GREEN	(b)																		
29																																								
30																																								
31																																								
32																																								
33																																								
34																																								
35																																								
36																																								
37																																								
38																																								
39																																								
40																																								

SIGNIFICANCE OF COLORS
YELLOW:- DETONATOR DOES NOT CONTAIN PRIMER MIXTURE OR IGNITING MIXTURE.
GREEN:- DETONATOR CONTAINS PRIMER MIXTURE. (STAB TYPE DETONATOR)
BLACK:- DETONATOR CONTAINS HEAVY DISC ON PRIMER MIXTURE END (I.E. .02 INSTEAD OF .002)
RED:- USED FOR SEALING PURPOSES ONLY (INDICATES SENSITIVE END OF DETONATOR WHEN PRESENT).
VIOLET:- SHELLAC SOLUTION USED TO SEPARATE EXPLOSIVES AND METALS WHICH TEND TO REACT WITH THE M-NO CODE SIGNIFICANCE.
GRAY:- DETONATOR CONTAINS IGNITING MIXTURE.

(a) ALUMINUM, CONDITION A, SPEC. QQ-A-561 (EXCEPT FOR THICKNESS DATA).
(b) GILDING METAL, SPEC. JAN-G-438 (EXCEPT FOR THICKNESS DATA).
(c) ADVISORY STOCK SIZE FOR DRAWN CUP .032 ± .002 THICK.
(d) ADVISORY STOCK SIZE FOR DRAWN CUP .025 ± .002 THICK.
(e) HEAT-TREAT AT 625°F. FOR ONE HOUR WHERE BURRS ARE REMOVED BY TUMBLING, HEAT-TREAT AFTER TUMBLING OPERATION.
(f) ADVISORY STOCK SIZE FOR DRAWN CUP .0126 ± .0009 THICK.
(g) COAT INTERIOR SURFACE OF CUP WITH SHELLAC SOLUTION, TYPE I, CLASS 1. THIS COATING TO BE APPLIED BY LOADING CONTRACTOR. COATING OF OUTSIDE OF CUP PERMITTED.
(m) COAT ONE SIDE WITH SHELLAC SOLUTION, TYPE I, CLASS 1.
(n) COAT BOTH SIDES WITH SHELLAC SOLUTION, TYPE I, CLASS 1.
(p) RADIUS AT INSIDE OF OPEN END MUST BE .005 MIN TO .010 MAX FOR THIS PC MK ONLY.

WITH NEW TRACING 73-2-183A SUPERSEDES OLD TRACING 73-2-183 UNDER REVISION DATE OF AUGUST 28, 1944

DETONATOR METAL PARTS DETAILS

JANUARY 23, 1943

CLASS	DIVISION	DRAWING	FILE
73	2	183	

REVISIONS

5	1-17-44
6	8-28-44
7	8-15-45
8	3-5-48
9	8-5-49
10	10-20-49

DRG. PERTAINS TO

TOLERANCE ON DIMENSIONS NOT OTHERWISE SPECIFIED
DECIMAL ±
FRACTIONAL ±
ANGULAR ±

D'FTSMAN B.L.K. | TRACER | ENGINEER
CHECKER | PRINCIPAL ENGINEER

SUBMITTED:
LT. COL. ORD. DEPT. U.S.A.

EXAMINED:
LT COL ORD. DEPT. U.S.A.

APPROVED BY ORDER OF THE CHIEF OF ORDNANCE:
COL ORD. DEPT. U.S.A.

D

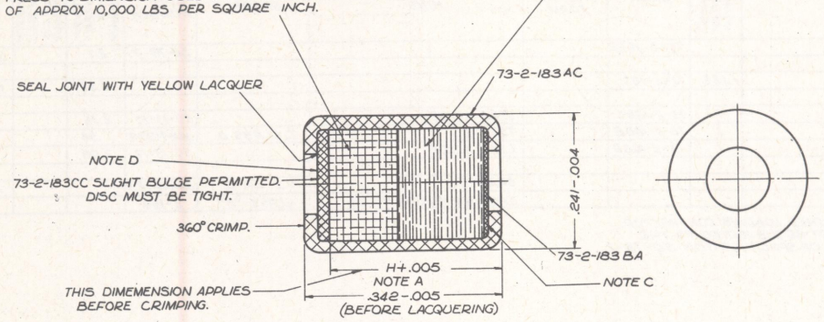
ORDNANCE DEPT., U.S.A.

CHARGE, LOWER 73-2-184 B 5

APPROX 1.27 GRAINS (82 MILLIGRAMS) TETRYL, GRADE I, CLASS α, (A)(B)
MAY CONTAIN NOT MORE THAN 2% GRAPHITE, GRADE I OR II
PRESS TO DIMENSION USED IN TRIAL LOADING AT PRESSURE
OF APPROX 10,000 LBS PER SQUARE INCH.

CHARGE, UPPER 73-2-184 C

3.86 -.15 GRAINS (250 -10 MILLIGRAMS) LEAD AZIDE
PRESS AT 10,000 LBS PER SQ IN.



ASSEMBLY 73-2-184 AB 5

NOTES

A - ESTABLISH "H" AND WEIGHT OF LOWER CHARGE REQUIRED TO OBTAIN TIGHT CLOSING DISC, AS SHOWN, USING MEAN WEIGHT OF UPPER CHARGE, BOTH CHARGES PRESSED AT 10,000 P S I (NOTE :- A VALUE OF .306 HAS BEEN USED SATISFACTORILY FOR "H").

B - LOWER CHARGE MAY BE MADE IN PELLET FORM AND RECONSOLIDATED IN CUP.
ADVISORY :- ONE SOLID PELLET ; DIA = .185,
LENGTH = .135, SPECIFIC GRAVITY 1.5 MAX.

C - DISC AND CUP WILL BE ASSEMBLED PRIOR TO LOADING BY EITHER OF THE FOLLOWING METHODS :-
1. COAT INSIDE BOTTOM SURFACE OF DETONATOR CUP WITH ACID PROOF BLACK PAINT AND SEAT DETONATOR DISC ON PAINT FILM. PAINT MUST NOT EXTEND OVER EXPOSED SURFACE OF DISC. ASSEMBLY MUST BE DRIED FOR 24 HOURS MIN AT 75°F TO 125°F BEFORE LOADING.
2. COAT DETONATOR DISC WITH PLASTIC ADHESIVE APPROVED BY OFFICE, CHIEF OF ORDNANCE, SEAT DISC AND CURE PLASTIC. AVERAGE THICKNESS OF ADHESIVE MUST NOT EXCEED .0005 INCH ON EXPOSED PORTION OF DISC. COLOR OF ADHESIVE MUST BE RED.

D - CLOSING DISC TO BE COATED WITH YELLOW LACQUER FOR IDENTIFICATION. COATING OF END OF CUP PERMITTED.

SUPERSEDES 73-2-184 WITHOUT CHANGE 3-9-49

LIST OF PARTS

LINE NO.	NAME OF PART	NUMBER REQ'D PER COMPONENT	PIECE MARK	MATERIAL: SIZE OR FORM	MATERIAL: KIND	MATERIAL: GRADE	MATERIAL: SPEC NUMBER	APPROXIMATE UNIT WEIGHT (GRAINS)	APPROX GROSS WT OF RAW STOCK PER ROUND ASSEMBLIES	REMARKS
1										
2	ASSEMBLY (DETONATOR M17)		73-2-184 AB				50-78-7	10.		
3	METAL PARTS	1 SET	73-2-183					4.71		(a)
4										
5	CHARGE, LOWER	1	73-2-184 B		TETRYL	I, CLASS α	JAN-T-339	1.27		
6	CHARGE, UPPER	1	73-2-184 C		LEAD AZIDE		50-13-12	3.86		
7					PAINT, ACID-PROOF BLACK	TYPES I & II	JAN-P-450			(b)
8					GRAPHITE	I OR II	JAN-G-155			
9										
10										
11					LACQUER, YELLOW, NO. 121	CLASS "B"	3-158			
12										
13										
14										

(a) METAL PARTS AS FURNISHED TO LOADING CONTRACTOR.
(b) A MIXTURE OF ACID-PROOF BLACK PAINTS, TYPES I & II, SPEC JAN-P-450 THINNED WITH XYLENE, SPEC TT-X-916, IF NECESSARY.

LIST OF SPECIFICATIONS

LINE NO.	LIST OF SPECIFICATIONS	SPEC NUMBER *	REQUIRED BY
1	AMMUNITION, EXCEPT SMALL ARMS AMMUNITION, GENERAL SPEC FOR	50-0-1	DWG 73-2-184
2			
3			
4	DETONATORS ; LOADING, ASSEMBLING, AND PACKING	50-78-7	DWG 73-2-184
5			
6	GRAPHITE	JAN-G-155	DWG 73-2-184
7	LACQUER, NITROCELLULOSE ; CLEAR AND PIGMENTED	3-158	DWG 73-2-184
8	LEAD AZIDE	50-13-12	DWG 73-2-184
9	PAINT, ACID-PROOF, BLACK, FOR AMMUNITION	JAN-P-450	DWG 73-2-184
10	PAINTS AND RELATED MATERIALS, GENERAL SPEC FOR	3-1	3-158
11			
12	TETRYL	JAN-T-339	DWG 73-2-184
13			
14	XYLENE, (NITRATION GRADE)	TT-X-619	DWG 73-2-184
15			

* THE SPECIFICATION NUMBERS SHOWN ARE BASIC NUMBERS ONLY. WHEN A SPECIFICATION IS REVISED A LETTER IS AFFIXED TO ITS BASIC NUMBER. SPECIFICATIONS REFERRED TO IN THESE SPECIFICATIONS AND NOT LISTED HEREON, SHALL NOT APPLY.

THIS DETONATOR FOR USE IN THE FOLLOWING :-

- FUZE, PD, M53
- FUZE, BD, MGGAI
- FUZE, BOMB, TAIL, AN-M100A2
- FUZE, BOMB, TAIL, AN-M101A2
- FUZE, BOMB, TAIL, AN-M102A2
- FUZE, BOMB, TAIL, M160
- FUZE, BOMB, TAIL, M161
- FUZE, BOMB, TAIL, M162

} PRIMER DETONATOR, M14.

- BOOSTER, M21A4
- FUZE, BD, M 72
- FUZE, BD, MG8
- FUZE, BOMB, TAIL, M112
- FUZE, BOMB, TAIL, M113
- FUZE, BOMB, TAIL, M114
- FUZE, BOMB, TAIL, M115
- FUZE, BOMB, TAIL, M116
- FUZE, BOMB, TAIL, M117

} PRIMER DETONATOR, M16.

- FUZE, BOMB, TAIL, M112A1
- FUZE, BOMB, TAIL, M113A1
- FUZE, BOMB, TAIL, M114A1

} PRIMER DETONATOR, M16A1.

MINE, ANTI-PERSONNEL, M2.

LIST OF DRAWINGS

LINE NO.	LIST OF DRAWINGS	DRAWING NUMBER
1	ASSEMBLY	73-2-184
2	METAL PARTS	73-2-183
3	CARTON, PACKING	76-7-712
4	BOX, PACKING	76-7-715
5	PACKING AND MARKING OF BOX	20-4-430
6	LIST OF PARTS & LIST OF SPECS	73-2-183A

NOTICE :- THIS DRAWING SHALL NOT BE USED NOR REPRODUCED EITHER WHOLLY OR IN PART EXCEPT WHEN AUTHORIZED IN CONNECTION WITH UNITED STATES GOVERNMENT PROCUREMENT.

0 INCH

DETONATOR, M17 LOADING ASSEMBLY.

JANUARY 23, 1943

CLASS	DIVISION	DRAWING	FILE
73	2	184	

REVISIONS

4	3-5-48			
5	3-9-49			

TOLERANCE ON DIMENSIONS NOT OTHERWISE SPECIFIED
DECIMAL ±
FRACTIONAL ±
ANGULAR ±

DRAFTSMAN PHG | TRACER REG | ENGINEER

CHECKER A.C.J. | ENGINEER

DRG. PERTAINS TO

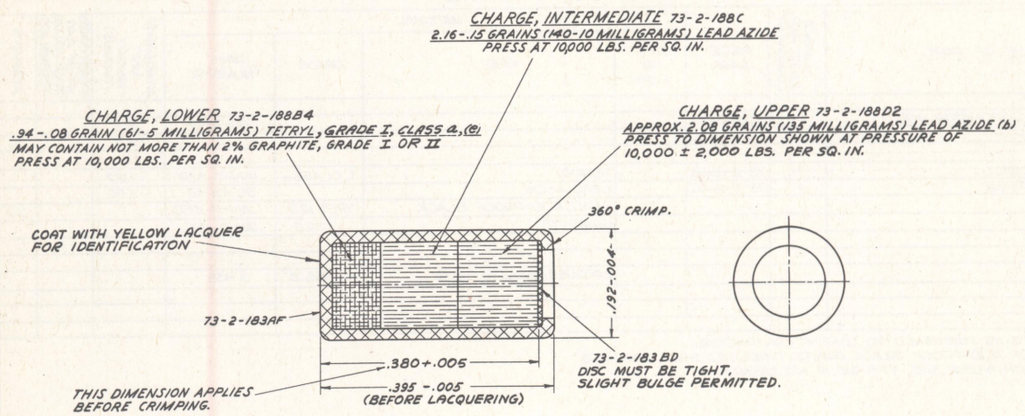
SUBMITTED :-
ORD. ENG., ORD. DEPT. U. S. A.

EXAMINED :-
COL., ORD. DEPT. U. S. A.

APPROVED BY ORDER OF THE CHIEF OF ORDNANCE :-
COL., ORD. DEPT. U. S. A.

D

ORDNANCE DEPT., U. S. A.



ASSEMBLY 73-2-188A4

(e) LOWER CHARGE MAY BE MADE IN PELLET FORM AND RECONSOLIDATED IN CUP. ADVISORY:- ONE SOLID PELLET; DIA.=.15, LENGTH=.15, SPECIFIC GRAVITY 1.5 MAX.

(b) ESTABLISH WEIGHT OF UPPER CHARGE BY TRIAL LOADING (USING MEAN WEIGHTS OF LOWER AND INTERMEDIATE CHARGES PRESSED AT 10,000 P.S.I., AND APPLYING 10,000 P.S.I. TO UPPER CHARGE, DETERMINE WEIGHT OF UPPER CHARGE REQUIRED TO PROVIDE HEIGHT EQUAL TO DIMENSION SHOWN).

LIST OF PARTS

LINE NO.	NAME OF PART	NUMBER REQUIRED PER COMPONENT	PIECE-MARK	MATERIAL: SIZE OR FORM	MATERIAL: KIND	MATERIAL: GRADE	MATERIAL: SPEC. NUMBER	APPROXIMATE UNIT WEIGHT (GRAINS)	APPROX. GROSS WT. OF ALL STOCK PER 1000 ASSEMBLIES	REMARKS
1	ASSEMBLY		73-2-188A				50-78-7	8.1		(d)
2										
3	METAL PARTS	1 SET	73-2-183					2.92		(c)
4										
5	CHARGE, INTERMEDIATE	1	73-2-188C		LEAD AZIDE		50-13-12	2.16		
6	CHARGE, LOWER	1	73-2-188B		TETRYL	I, CLASS a	JAN-T-339	.94		
7	CHARGE, UPPER	1	73-2-188D		LEAD AZIDE		50-13-12	2.08		
8										
9					GRAPHITE	I OR II	JAN-G-155			
10					LACQUER, YELLOW. NO. 121	CLASS "B"	3-158			

(c) METAL PARTS AS FURNISHED LOADING CONTRACTOR.
(d) THIS DETONATOR WILL NOT BE SUBJECTED TO THE WATERPROOFNESS TEST OF SPECIFICATION 50-78-7.

LIST OF DRAWINGS

LINE NO.	LIST OF DRAWINGS	DRAWING NUMBER
1	ASSEMBLY	73-2-188
2	METAL PARTS	73-2-183
3	CARTON, PACKING	76-7-712
4	BOX, PACKING	76-7-715
5	PACKING AND MARKING OF BOX	20-4-430
6	LIST OF PARTS & LIST OF SPECS.	73-2-183A

LIST OF SPECIFICATIONS

LINE NO.	LIST OF SPECIFICATIONS	SPEC. NUMBER *	REQUIRED BY
1	AMMUNITION, EXCEPT SMALL ARMS AMM., GENERAL SPEC. FOR	50-0-1	DRG. 73-2-188
2			
3	DETONATORS, LOADING, ASSEMBLING, AND PACKING	50-78-7	DRG. 73-2-188
4			
5	GRAPHITE	JAN-G-155	DRG. 73-2-188
6	LACQUER, NITROCELLULOSE; CLEAR AND PIGMENTED	3-158	DRG. 73-2-188
7	LEAD AZIDE	50-13-12	DRG. 73-2-188
8	PAINTS AND RELATED MATERIALS, GENERAL SPEC. FOR	3-1	3-158
9	TETRYL	JAN-T-339	DRG. 73-2-188
10			

* THE SPECIFICATION NUMBERS SHOWN ARE BASIC NUMBERS ONLY. WHEN A SPECIFICATION IS REVISED A LETTER IS AFFIXED TO ITS BASIC NUMBER. SPECIFICATIONS REFERRED TO IN THESE SPECIFICATIONS AND NOT LISTED HEREON, SHALL NOT APPLY.

0 IN.

THIS DETONATOR FOR USE IN THE FOLLOWING:-
FUZE, BASE DETONATING, MK. I.
FUZE, BASE DETONATING, M60.

DETONATOR, M21. LOADING ASSEMBLY.

JANUARY 23, 1943 | CLASS 73 | DIVISION 2 | DRAWING 188 | FILE

REVISIONS

1	1-17-44			
2	8-28-44			
3	8-15-45			
4	3-5-48			

TOLERANCE ON DIMENSIONS NOT OTHERWISE SPECIFIED
DECIMAL ±
FRACTIONAL ±
ANGULAR ±

DFTSMAN H.O. | TRACER H.O. | ENGINEER

CHECKED | ENGINEER M.T.

SUBMITTED:- Wm. Sturgis COL., ORD. DEPT. U.S.A.

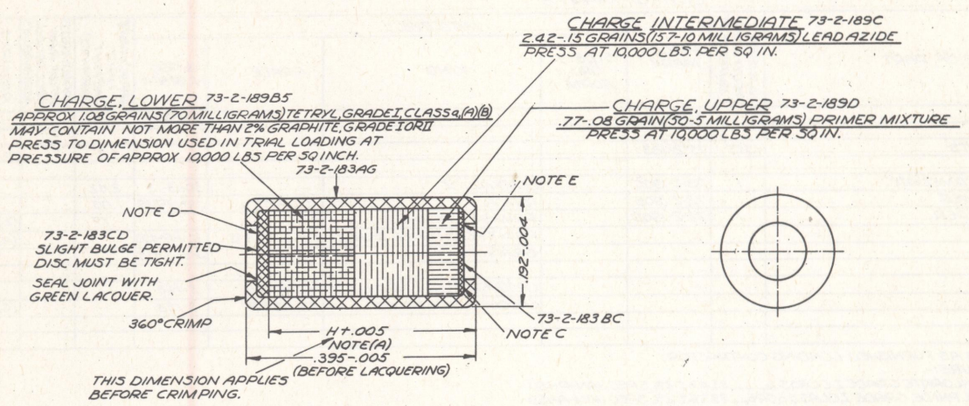
EXAMINED:- D.L. Woodbury L.T. COL. ORD. DEPT. U.S.A.

APPROVED BY ORDER OF THE CHIEF OF ORDNANCE:- W.H. Tschirky COL., ORD. DEPT. U.S.A.

DRG. PERTAINS TO

D

ORDNANCE DEPT. U.S.A.



ASSEMBLY 73-2-189A5

NOTES:-

(A) ESTABLISH "H" AND WEIGHT OF LOWER CHARGE REQUIRED TO OBTAIN TIGHT CLOSING DISC, AS SHOWN, USING MEAN WEIGHTS OF UPPER AND INTERMEDIATE CHARGES. ALL CHARGES PRESSED AT 10,000 P.S.I. (NOTE:-A VALUE OF .366 HAS BEEN USED SATISFACTORILY FOR "H")

(B) LOWER CHARGE MAY BE MADE IN PELLET FORM AND RECONSOLIDATED IN CUP.
ADVISORY:- ONE SOLID PELLET:- DIA=.15, LENGTH=.173, SPECIFIC GRAVITY 1.5 MAX.

(C) DISC AND CUP WILL BE ASSEMBLED PRIOR TO LOADING BY EITHER OF THE FOLLOWING METHODS.
1. COAT INSIDE BOTTOM SURFACE OF DETONATOR CUP WITH ACID-PROOF BLACK PAINT AND SET DETONATOR DISC ON PAINT FILM. PAINT MUST NOT EXTEND OVER EXPOSED SURFACE OF THE DISC. ASSEMBLY MUST BE DRIED FOR 24 HOURS AT 75° F TO 125° F BEFORE LOADING.
2. COAT DETONATOR DISC WITH PLASTIC ADHESIVE APPROVED BY OFFICE, CHIEF OF ORDNANCE, SEAT DISC AND CURE PLASTIC. AVERAGE THICKNESS OF ADHESIVE MUST NOT EXCEED .0005 INCH ON EXPOSED PORTION OF DISC. COLOR OF ADHESIVE MUST BE RED.

(D) CLOSING DISC TO BE COATED WITH GREEN LACQUER FOR IDENTIFICATION. COATING OF END OF CUP PERMITTED.

(E) SEAL JOINT AND COAT EXPOSED SURFACE OF DISC WITH RED LACQUER. COATING OF END OF CUP PERMITTED.

SUPERSEDES 73-2-189 WITHOUT CHANGE 3-9-49

LIST OF PARTS

LINE NO.	NAME OF PART	NUMBER REQ'D PER COMPONENT	PIECE MARK	MATERIAL: SIZE OR FORM	MATERIAL: KIND	MATERIAL: GRADE	MATERIAL: SPEC NUMBER	APPROXIMATE UNIT WEIGHT (GRAINS)	APPROX GROSS WT OF RAW STOCK PER 100 ASSEMBLIES	REMARKS
1	ASSEMBLY		73-2-189A				50-78-7	7.3		
2										
3	METAL PARTS	1 SET	73-2-183					3.0		(a)
4										
5	CHARGE, INTERMEDIATE	1	73-2-189C		LEAD AZIDE		50-13-12	2.42		
6	CHARGE, LOWER	1	73-2-189B		TETRYL	I, CLASS a	JAN-T-339	1.08		
7	CHARGE, UPPER	1	73-2-189D		PRIMER MIXTURE			.77		(b)
8					PAINT, ACID-PROOF, BLACK	TYPE I & II	JAN-P-450			(d)
9					GRAPHITE	I OR II	JAN-G-155			
10										
11					LACQUER, GREEN, NO. 112	CLASS "B"	3-158			
12					LACQUER, RED, NO. 105	CLASS "B"	3-158			(c)
13										
14										

(a) METAL PARTS AS FURNISHED LOADING CONTRACTOR.

(b) PRIMER MIXTURE:-
POTASSIUM CHLORATE, GRADE I, CLASS b ____ 33.4% ± 2%, SPEC. JAN-P-150
ANTIMONY SULPHIDE, GRADE I, CLASS a OR b ___ 33.3% ± 2%, SPEC JAN-A-159
LEAD AZIDE ____ 28.3% ± 2%, SPEC 50-13-12
CARBORUNDUM, 150 GRAIN ____ 5.0% ± .5%, COMMERCIAL.
FOR ANALYSIS, CARBORUNDUM MAY BE 6.5% MAX.
ALL ABOVE PERCENTAGES ARE BY WEIGHT.

(c) ALTERNATIVE:- DUPONT SEALING COMPOUND J-5400-X-2674 OR EQUIVALENT.

(d) A MIXTURE OF ACID-PROOF BLACK PAINTS, TYPE I AND II SPEC JAN-P-450 THINNED WITH XYLENE SPEC TT-X-916 IF NECESSARY.

LIST OF SPECIFICATIONS

LINE NO.	LIST OF SPECIFICATIONS	SPEC NUMBER *	REQUIRED BY
1	AMMUNITION, EXCEPT SMALL ARMS AMM., GENERAL SPEC FOR	50-0-1	DWG 73-2-189
2	ANTIMONY SULPHIDE	JAN-A-159	DWG 73-2-189
3			
4	DETONATORS, LOADING, ASSEMBLING, AND PACKING	50-78-7	DWG 73-2-189
5			
6	GRAPHITE	JAN-G-155	DWG 73-2-189
7			
8	LACQUER, NITROCELLULOSE; CLEAR AND PIGMENTED	3-158	DWG 73-2-189
9	LEAD AZIDE	50-13-12	DWG 73-2-189
10	PAINT, ACID-PROOF, BLACK, FOR AMMUNITION	JAN-P-450	DWG 73-2-189
11	POTASSIUM CHLORATE (FOR USE IN AMMUNITION)	JAN-P-150	DWG 73-2-189
12	PAINTS AND RELATED MATERIALS, GENERAL SPEC FOR	3-1	3-158
13			
14	TETRYL	JAN-T-339	DWG 73-2-189
15			
16			
17	XYLENE (NITRATION GRADE)	TT-X-916	DWG 73-2-189

* THE SPECIFICATION NUMBERS SHOWN ARE BASIC NUMBERS ONLY. WHEN A SPECIFICATION IS REVISED A LETTER IS AFFIXED TO ITS BASIC NUMBER. SPECIFICATIONS REFERRED TO IN THESE SPECIFICATIONS AND NOT LISTED HEREON, SHALL NOT APPLY.

0 IN.

LIST OF DRAWINGS

LINE NO.	LIST OF DRAWINGS	DRAWING NUMBER
1	ASSEMBLY	73-2-189
2	METAL PARTS	73-2-183
3	CARTON, PACKING	76-7-712
4	BOX, PACKING	76-7-715
5	PACKING AND MARKING OF BOX	20-4-430
6	LIST OF PARTS & LIST OF SPECS	73-2-183A

THIS DETONATOR FOR USE IN THE FOLLOWING:-
FUZE, P.D., M64A1
FUZE, P.D., M62A1

NOTICE:- THIS DRAWING SHALL NOT BE USED NOR REPRODUCED EITHER WHOLLY OR IN PART EXCEPT WHEN AUTHORIZED IN CONNECTION WITH UNITED STATES GOVERNMENT PROCUREMENT.

DETONATOR, M22. LOADING ASSEMBLY

JANUARY 23, 1943

CLASS	DIVISION	DRAWING	FILE
73	2	189	

REVISIONS

4	3-5-48
5	3-9-49

TOLERANCE ON DIMENSIONS NOT OTHERWISE SPECIFIED
* DECIMAL ±
FRACTIONAL ±
ANGULAR ±

D'FTSMAN	TRACER	ENGINEER
H.O.	E.J.S.	

CHECKER	ENGINEER
A.G.V.	

DRG. PERTAINS TO

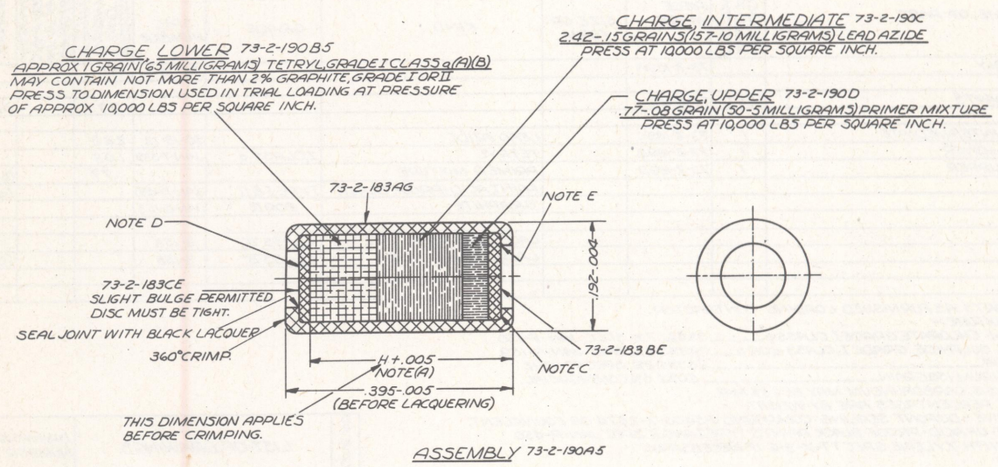
SUBMITTED:-
ORD. ENG., ORD. DEPT., U. S. A.

EXAMINED:-
COL., ORD. DEPT., U. S. A.

APPROVED BY ORDER OF THE CHIEF OF ORDNANCE:-
COL., ORD. DEPT., U. S. A.

D

ORDNANCE DEPT., U. S. A.



LIST OF PARTS

LINE NO.	NAME OF PART	NUMBER REQ'D PER COMPONENT	PIECE MARK	MATERIAL: SIZE OR FORM	MATERIAL: KIND	MATERIAL: GRADE	MATERIAL: SPEC NUMBER	APPROXIMATE UNIT WEIGHT (GRAINS)	APPROX GROSS WT OF RAW STOCK PER 1000 ASSEMBLIES	REMARKS
1	ASSEMBLY		73-2-190A				50-78-7	7.4		
2										
3	METAL PARTS	1 SET	73-2-183					3.2		(a)
4										
5	CHARGE, INTERMEDIATE	1	73-2-190C		LEAD AZIDE		50-13-12	2.42		
6	CHARGE, LOWER	1	73-2-190B		TETRYL	I, CLASS a	JAN-T-339	1.00		
7	CHARGE, UPPER	1	73-2-190D		PRIMER MIXTURE			.77		(b)
8					PAINT, ACID-PROOF, BLACK	TYPES I & II	JAN-P-450			(d)
9					GRAPHITE	I OR II	JAN-G-155			
10										
11					LACQUER, BLACK, NO. 101	CLASS "B"	3-158			
12					LACQUER, RED, NO. 105	CLASS "B"	3-158			(c)
13										
14										

(a) METAL PARTS AS FURNISHED LOADING CONTRACTOR.
(b) PRIMER MIXTURE:-
POTASSIUM CHLORATE, GRADE I, CLASS b ____ 33.4% ± 2%, SPEC JAN-P-150
ANTIMONY SULPHIDE, GRADE I, CLASS a OR b ___ 33.3% ± 2%, SPEC JAN-A-159
LEAD AZIDE _____ 28.3% ± 2%, SPEC 50-13-12
CARBORUNDUM, 150 GRAIN _____ 5.0% ± .5%, COMMERCIAL
FOR ANALYSIS, CARBORUNDUM MAY BE 6.5% MAX.
ALL ABOVE PERCENTAGES ARE BY WEIGHT.
(c) ALTERNATIVE:- DUPONT SEALING COMPOUND J-5400-X-2674 OR EQUIVALENT.
(d) A MIXTURE OF ACID-PROOF BLACK PAINTS, TYPES I AND II, SPEC JAN-P-450 THINNED WITH XYLENE, SPEC TT-X-916 IF NECESSARY.

LIST OF DRAWINGS

LINE NO.	LIST OF DRAWINGS	DRAWING NUMBER
1	ASSEMBLY	73-2-190
2	METAL PARTS	73-2-183
3	CARTON, PACKING	76-7-712
4	BOX, PACKING	76-7-715
5	PACKING AND MARKING OF BOX	20-4-430
6	LIST OF PARTS & LIST OF SPECS	73-2-183A

THIS DETONATOR FOR USE IN THE FOLLOWING:-
FUZE, P.D., M36.

NOTES:-
(A) ESTABLISH "H" AND WEIGHT OF LOWER CHARGE REQUIRED TO OBTAIN TIGHT CLOSING DISC, AS SHOWN USING MEAN WEIGHTS OF UPPER AND INTERMEDIATE CHARGES. ALL CHARGES PRESSED AT 10,000 P.S.I. (NOTE:-A VALUE OF .366 HAS BEEN USED SATISFACTORILY FOR "H").
(B) LOWER CHARGE MAY BE MADE IN PELLET FORM AND RECONSOLIDATED IN CUP.
ADVISORY:-ONE SOLID PELLET; DIA=.15, LENGTH=.16 SPECIFIC GRAVITY 1.5 MAX.
(C) DISC AND CUP WILL BE ASSEMBLED PRIOR TO LOADING BY EITHER OF THE FOLLOWING METHODS.
1. COAT INSIDE BOTTOM SURFACE OF DETONATOR CUP WITH ACID-PROOF BLACK PAINT AND SET DETONATOR DISC ON PAINT FILM. PAINT MUST NOT EXTEND OVER EXPOSED SURFACE OF THE DISC. ASSEMBLY MUST BE DRIED FOR 24 HOURS AT 75°F TO 125°F BEFORE LOADING.
2. COAT DETONATOR DISC WITH PLASTIC ADHESIVE APPROVED BY OFFICE, CHIEF OF ORDNANCE, SEAT DISC AND CURE PLASTIC. AVERAGE THICKNESS OF ADHESIVE MUST NOT EXCEED .0005 INCH ON EXPOSED PORTION OF DISC. COLOR OF ADHESIVE MUST BE RED.
(D) CLOSING DISC TO BE COATED WITH BLACK LACQUER FOR IDENTIFICATION. COATING OF END OF CUP PERMITTED.
(E) SEAL JOINT AND COAT EXPOSED SURFACE OF DISC WITH RED LACQUER. COATING OF END OF CUP PERMITTED.

LIST OF SPECIFICATIONS

LINE NO.	LIST OF SPECIFICATIONS	SPEC NUMBER *	REQUIRED BY
1	AMMUNITION, EXCEPT SMALL ARMS AMM., GENERAL SPEC FOR	50-0-1	DWG 73-2-190
2	ANTIMONY SULPHIDE	JAN-A-159	DWG 73-2-190
3			
4			
5	DETONATORS, LOADING, ASSEMBLING, AND PACKING	50-78-7	DWG 73-2-190
6	GRAPHITE	JAN-G-155	DWG 73-2-190
7			
8	LACQUER, NITROCELLULOSE, CLEAR AND PIGMENTED	3-158	DWG 73-2-190
9	LEAD AZIDE	50-13-12	DWG 73-2-190
10	PAINT, ACID-PROOF, BLACK, FOR AMMUNITION	JAN-P-450	DWG 73-2-190
11	PAINTS AND RELATED MATERIALS, GENERAL SPEC FOR	3-1	3-158
12	POTASSIUM CHLORATE (FOR USE IN AMMUNITION)	JAN-P-150	DWG 73-2-190
13			
14	TETRYL	JAN-T-339	DWG 73-2-190
15			
16			
17	XYLENE (NITRATION GRADE)	TT-X-916	DWG 73-2-190

* THE SPECIFICATION NUMBERS SHOWN ARE BASIC NUMBERS ONLY. WHEN A SPECIFICATION IS REVISED A LETTER IS AFFIXED TO ITS BASIC NUMBER. SPECIFICATIONS REFERRED TO IN THESE SPECIFICATIONS AND NOT LISTED HEREON, SHALL NOT APPLY.

0 IN.

NOTICE:- THIS DRAWING SHALL NOT BE USED NOR REPRODUCED EITHER WHOLLY OR IN PART EXCEPT WHEN AUTHORIZED IN CONNECTION WITH UNITED STATES GOVERNMENT PROCUREMENT

DETONATOR, M23.
LOADING ASSEMBLY.

JANUARY 23, 1943 | CLASS 73 | DIVISION 2 | DRAWING 190 | FILE

REVISIONS
4 3-5-48
5 3-9-49

TOLERANCE ON DIMENSIONS NOT OTHERWISE SPECIFIED
DECIMAL ±
FRACTIONAL ±
ANGULAR ±

D'FTSMAN H.O. | TRACER E.J.S. | ENGINEER
CHECKER A.C.J. | ENGINEER

DRG. PERTAINS TO

SUBMITTED:- ORD. ENG., ORD. DEPT. U.S.A.

EXAMINED:- C. R. Dutton COL., ORD. DEPT. U.S.A.

APPROVED BY ORDER OF THE CHIEF OF ORDNANCE:- J. H. Burns COL., ORD. DEPT. U.S.A.

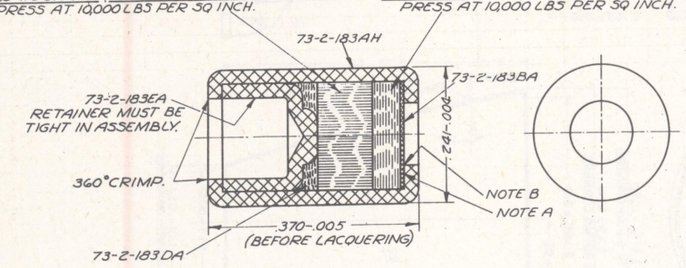
D

ORDNANCE DEPT., U.S.A.

SUPERSEDES 73-2-190 WITHOUT CHANGE 3-9-49

CHARGE, LOWER 73-2-191B3
2.85-15 GRAINS (185-10 MILLIGRAMS) LEAD AZIDE
PRESS AT 10,000 LBS PER SQ INCH.

CHARGE, UPPER 73-2-191C
105-.08 GRAINS (6.8-5 MILLIGRAMS) PRIMER MIXTURE
PRESS AT 10,000 LBS PER SQ INCH.



ASSEMBLY 73-2-191A5

NOTES:
A-DISC AND CUP WILL BE ASSEMBLED PRIOR TO LOADING BY EITHER OF THE FOLLOWING METHODS:
1. COAT INSIDE BOTTOM SURFACE OF DETONATOR CUP WITH ACID-PROOF BLACK PAINT AND SET DETONATOR DISC ON PAINT FILM. PAINT MUST NOT EXTEND OVER EXPOSED SURFACE OF THE DISC. ASSEMBLY MUST BE DRIED FOR 24 HOURS AT 75°F TO 125°F BEFORE LOADING.
2. COAT DETONATOR DISC WITH PLASTIC ADHESIVE APPROVED BY OFFICE, CHIEF OF ORDNANCE SEAT DISC AND CURE PLASTIC. AVERAGE THICKNESS OF ADHESIVE MUST NOT EXCEED .0005 INCH ON EXPOSED PORTION OF DISC.
B-SEAL JOINT AND COAT EXPOSED SURFACE OF DISC WITH RED LACQUER. COATING OF END OF CUP PERMITTED.

SUPERSEDES 73-2-191 WITHOUT CHANGE 3-9-49

LIST OF PARTS

LINE NO	NAME OF PART	NUMBER REQ'D PER COMPONENT	PIECE MARK	MATERIAL: SIZE OR FORM	MATERIAL: KIND	MATERIAL: GRADE	MATERIAL: SPEC NUMBER	APPROXIMATE UNIT WT (GRAINS)	APPROX GROSS WT OF RAW STOCK PER 1000 ASSEMBLIES	REMARKS
1	ASSEMBLY		73-2-191A				50-78-7	10.2		
2										
3	METAL PARTS	1 SET	73-2-183					6.03		(a)
4										
5	CHARGE, LOWER	1	73-2-191B		LEAD AZIDE		50-13-12	3.16		
6	CHARGE, UPPER	1	73-2-191C		PRIMER MIXTURE			1.05		(b)
7					PAINT, ACID-PROOF, BLACK	TYPE I & II	JAN-P-150			(d)
8										
9					LACQUER, RED NO. 105	CLASS "B"	3-158			(c)

(a) METAL PARTS AS FURNISHED LOADING CONTRACTOR.
(b) PRIMER MIXTURE:- POTASSIUM CHLORATE, GRADE I, CLASS 6 ..... 33.4% ± 2%, SPEC JAN-P-150.
ANTIMONY SULPHITE, GRADE I, CLASS 9 OR 6 ..... 33.3% ± 2%, SPEC JAN-A-159
LEAD AZIDE ..... 28.3% ± 2%, SPEC 50-13-12
CARBORUNDUM, 150 GRAIN ..... 5.0% ± .5%, COMMERCIAL.
FOR ANALYSIS, CARBORUNDUM MAY BE 6.5% MAX.
ALL ABOVE PERCENTAGES ARE BY WEIGHT.
(c) ALTERNATIVE:- DUPONT SEALING COMPOUND J-5400-X-2674 OR EQUIVALENT.
(d) A MIXTURE OF ACID-PROOF BLACK PAINTS TYPE I AND II, SPEC JAN-P-150 THINNED WITH XYLENE, SPEC TT-X-916, IF NECESSARY.

LINE NO	LIST OF DRAWINGS	DRAWING NUMBER
1	ASSEMBLY	73-2-191
2	METAL PARTS	73-2-183
3	CARTON, PACKING	76-7-712
4	BOX, PACKING	76-7-715
5	PACKING AND MARKING OF BOX	20-4-490
6	LIST OF PARTS AND LIST OF SPECS.	73-2-183A

LINE NO	LIST OF SPECIFICATIONS	SPEC NUMBER *	REQUIRED BY
1	AMMUNITION, EXCEPT SMALL ARMS AMM., GENERAL SPEC FOR	50-0-1	DWG 73-2-191
2	ANTIMONY SULPHIDE	JAN-A-159	DWG 73-2-191
3			
4	DETONATORS; LOADING, ASSEMBLING, AND PACKING	50-78-7	DWG 73-2-191
5	LACQUER, NITRO CELLULOSE; CLEAR AND PIGMENTED	3-158	DWG 73-2-191
6	LEAD AZIDE	50-13-12	DWG 73-2-191
7	PAINTS AND RELATED MATERIALS, GENERAL SPEC FOR	3-1	3-158
8	POTASSIUM CHLORATE (FOR USE IN AMMUNITION)	JAN-P-150	DWG 73-2-191
9	PAINT, ACID-PROOF, BLACK FOR AMMUNITION	JAN-P-450	DWG 73-2-191
10			
11	XYLENE (NITRATION GRADE)	TT-X-916	DWG 73-2-191

* THE SPECIFICATION NUMBERS SHOWN ARE BASIC NUMBERS ONLY. WHEN A SPECIFICATION IS REVISED, A LETTER IS AFFIXED TO ITS BASIC NUMBER. SPECIFICATIONS REFERRED TO IN THESE SPECIFICATIONS AND NOT LISTED HEREON, SHALL NOT APPLY.

NOTICE:- THIS DRAWING SHALL NOT BE USED NOR REPRODUCED EITHER WHOLLY OR IN PART EXCEPT WHEN AUTHORIZED IN CONNECTION WITH UNITED STATES GOVERNMENT PROCUREMENT.

0 IN.

THIS DETONATOR FOR USE IN THE FOLLOWING
FUZE, P.D., M46
FUZE, P.D., M47
FUZE, P.D., M48A2
FUZE, P.D., M51A4
FUZE, P.D., M51A4 MOD 3.
FUZE, T & SQ., M54
FUZE, T & S.Q., M55A3
FUZE, P.D. M57

DETONATOR, M24. LOADING ASSEMBLY

JANUARY 23, 1943

REVISIONS			
4	3-5-48		
5	3-9-49		

CLASS	DIVISION	DRAWING	FILE
73	2	191	

TOLERANCE ON DIMENSIONS NOT OTHERWISE SPECIFIED
DECIMAL ±
FRACTIONAL ±
ANGULAR ±

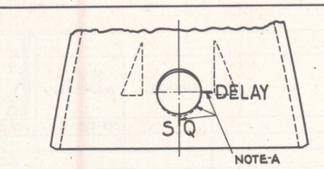
D'FTSMAN	TRACER	ENGINEER
F.R.D.	E.V.S.	
CHECKER		ENGINEER
A.C.J.		

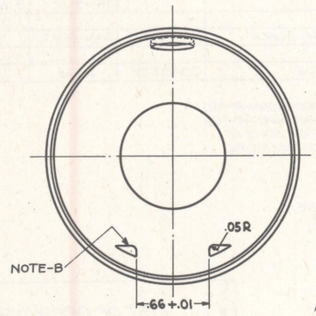
DRG. PERTAINS TO

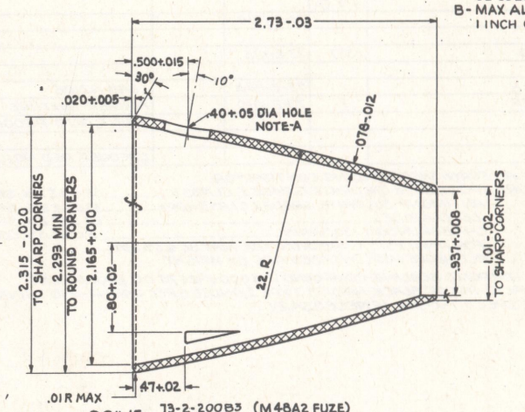
SUBMITTED:- ORD. DEPT. U.S.A.
EXAMINED:- CH, ORD. DEPT. U.S.A.
APPROVED BY ORDER OF THE CHIEF OF ORDNANCE:- CH, ORD. DEPT. U.S.A.

D

ORDNANCE DEPT., U.S.A.

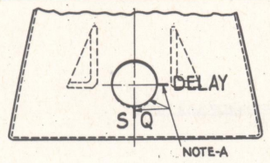


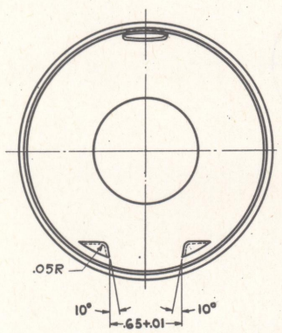


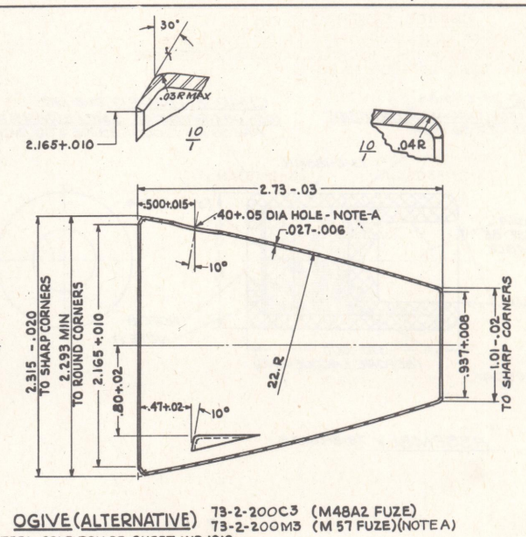


OGIVE 73-2-200B3 (M48A2 FUZE)
73-2-200L3 (M57 FUZE)(NOTE-A)
ALUMINUM-BASE-ALLOY, DIE CASTING, CLASS 2
2/1

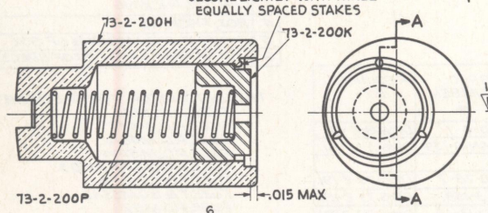
NOTES:
A- STAMP AS SHOWN WITH $\frac{1}{8}$ LETTERS, MARK LINES TO BE .01 DEEP X .02 WIDE AND .10 LONG. (OMIT HOLE AND STAMPING WHEN OGIVE IS TO BE USED FOR M57 FUZE.)
B- MAX ALLOWABLE TAPER .04 PER 1 INCH OF LENGTH.



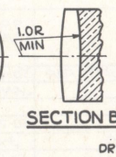




OGIVE (ALTERNATIVE) 73-2-200C3 (M48A2 FUZE)
73-2-200M3 (M57 FUZE)(NOTE A)
STEEL, COLD ROLLED, SHEET, WD 1010
2/1

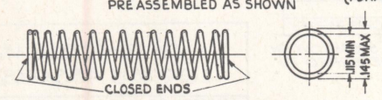


SECTION A-A 6/1



SECTION B-B

SETTING SLEEVE SUB-ASSEMBLY 73-2-200N3
COMPONENT PARTS NEED NOT BE PRE ASSEMBLED AS SHOWN (FORMERLY 73-2-143E)



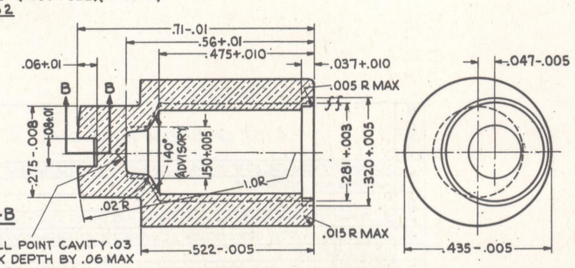
SPRING, INTERRUPTER 73-2-200P3
STEEL, WIRE, MUSIC SPRING, WD 1085 W
6/1 (FORMERLY 73-2-141K)

REQUIREMENTS

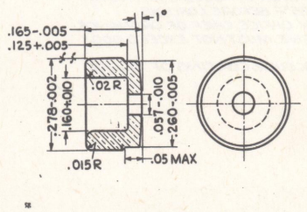
A- SOLID HEIGHT NOT OVER .19 INCHES
B- LEFT HAND WIND.
C- SEASON THOROUGHLY AFTER WINDING
D- WITHIN 24 HOURS AFTER PLATING, TREAT TO REMOVE EMBRITTLEMENT.
E- MUST MEET ARMING LIMITS OF INTERRUPTER AS SPECIFIED UNDER BODY ASSEMBLY. (OCCASIONAL CHECK WILL BE MADE AFTER COMPRESSION FOR AT LEAST 24 HRS AT THE ASSEMBLED HEIGHT.)

ADVISORY DATA
(MAY VARY TO MEET REQUIREMENTS)

A- DIAMETER OF WIRE = .011 INCH
B- TOTAL NUMBER OF COILS = 14 $\frac{1}{2}$
C- NUMBER OF ACTIVE COILS = 12 $\frac{1}{2}$
D- ADJUST FREE HEIGHT TO MEET LOAD AT .3 IN. SUGGESTED TRIAL FREE HEIGHT = .6 IN.
E- LOAD AT .3 IN. = 3 $\frac{3}{4}$ OZ ± $\frac{1}{2}$ OZ.
F- LOAD APPLIED AFTER SEASONING, PLATING AND TREATMENT TO REMOVE EMBRITTLEMENT.
G- SEASON BY HEATING TO 500°F FOR 30 MINUTES.
H- TO REMOVE EMBRITTLEMENT, HEAT TO 300°F FOR AT LEAST 30 MINUTES AS SOON AFTER PLATING AS PRACTICABLE.



SLEEVE, SETTING 73-2-200H3
COMMERCIAL BRASS, ROD, COMPOSITION B, HALF HARD
FINISH ƒ EXCEPT AS NOTED
6/1



CUP, SPRING 73-2-200K3
COMMERCIAL BRASS, ROD, COMPOSITION B, HALF HARD
FINISH ƒ EXCEPT AS NOTED
6/1

FOR ALTERNATIVE MATERIALS AND PROTECTIVE FINISHES, SEE LIST OF PARTS.

REMOVE ALL BURRS

WITH 73-2-268, 73-2-143
SUPERSEDES 73-2-141, 73-2-143 AND 73-2-200 WITH CHANGE AUGUST 15, 1945

FUZE, PD, M48A3 ET AL DETAILS

AUGUST 2, 1943

REVISIONS					
3	8-15-45				
4	10-18-49				

CLASS	DIVISION	DRAWING	FILE
73	2	200	

TOLERANCE ON DIMENSIONS NOT OTHERWISE SPECIFIED
DECIMAL ±
FRACTIONAL ±
ANGULAR ±

DRAFTSMAN	TRACER	ORD. ENGINEER
DCS	DCS	
CHECKER		HEAD ENGINEER
SNT		

SUBMITTED: DCOL, ORD DEPT. U.S.A.
EXAMINED: ORD. DEPT. U.S.A.
APPROVED BY ORDER OF THE CHIEF OF ORDNANCE: COL, ORD. DEPT. U.S.A.

DRG. PERTAINS TO

73-2-163	FUZE, PD, M51A5 MOD 3
73-2-140	FUZE, PD, M48A3
73-2-143	

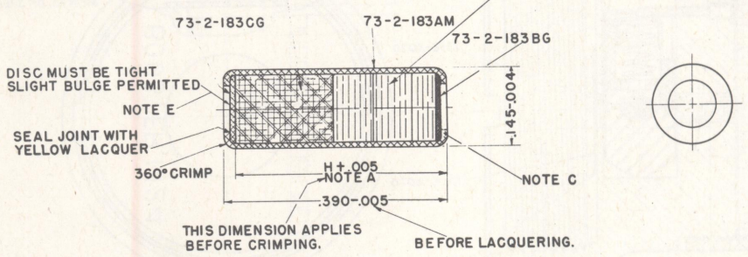
D

ORDNANCE DEPT. U.S.A.

CLASS & DIV. E

CHARGE, LOWER 73-2-205B5
APPROX 1.05 GRAIN (68. MILLIGRAMS) RDX, TYPE A OR B
PRESS TO DIMENSION USED IN TRIAL LOADING AT A PRESSURE OF APPROX 10,000 LBS PER SQ IN.

CHARGE, UPPER 73-2-205C5
1.85-.15 GRAINS (120.-10. MILLIGRAMS) LEAD AZIDE
PRESS AT 10,000 LBS PER SQ IN. NOTE D.



ASSEMBLY 73-2-205A5

LIST OF PARTS

LINE NO.	NAME OF PART	NUMBER REQD PER COMPONENT	PIECE MARK	MATERIAL: SIZE OR FORM	MATERIAL: KIND	MATERIAL: GRADE	MATERIAL: SPEC NUMBER	APPROX UNIT WT (GRAINS)	APPROX GROSS WT OF RAW STOCK PER 1000 ASSYS	REMARKS
1	ASSEMBLY		73-2-205A					3.70		
2										
3	METAL PARTS	1 SET	73-2-183				50-48-14	80		a
4										
5	CHARGE, LOWER	1	73-2-205B		RDX, TYPE A OR B		JAN-R-398	1.05		c,d,e
6	CHARGE, UPPER	1	73-2-205C		LEAD AZIDE		MIL-L-3055	1.85		
7										
8					ADHESIVE, PLASTIC		COMMERCIAL			h
9					PAINT, ACID-PROOF, BLACK	TYPES I & II	JAN-P-450			b
10										
11					LACQUER, YELLOW, NO. 121	TYPE I	MIL-L-10287			
12										
13										
14										
15										
16										

a—METAL PARTS AS FURNISHED LOADING CONTRACTOR.
b—A MIXTURE OF ACID-PROOF BLACK PAINTS, TYPE I AND II, SPEC JAN-P-450 THINNED WITH XYLENE, GRADE B, SPEC AXS-1479, IF NECESSARY.
c—MAY CONTAIN NOT MORE THAN 2% OF APPROX 50/50 CALCIUM RESINATE, TYPE II, SPEC 50-11-89 (f) / GRAPHITE, GRADE I, SPEC JAN-G-155.
d—ALTERNATIVE MATERIAL (g) :- RDX, TYPE A OR B, CLASS A OR B, SPEC JAN-R-398.
e—RDX, SPEC JAN-R-398, EXCEPT THAT GRANULATION SHALL BE AS FOLLOWS:- THROUGH U.S. STANDARD SIEVE, SPEC RR-S-366

MICRON	SIEVE NO.	PERCENT PASSING
840	20	98% MIN
500	35	66% ± 5%
297	50	38% ± 5%
149	100	26% ± 5%
74	200	16 % ± 5%

f—EXCEPT THAT GRANULATION SHALL BE SUCH AS TO PASS 100% THROUGH A U.S. STANDARD SIEVE, 149 MICRON (NO. 100) SPEC RR-S-366.
g—ALTERNATIVE MATERIALS ARE INTENDED TO BE USED ONLY WHEN PRESCRIBED MATERIALS ARE NOT AVAILABLE.
h—ALUMINUM SEAL CO, RICHMOND, INDIANA OR APPROVED SUBSTANTIAL EQUAL.

NOTES:-
A-ESTABLISH "H" AND WEIGHT OF LOWER CHARGE REQUIRED TO OBTAIN TIGHT CLOSING DISC, AS SHOWN, USING MEAN WEIGHT OF UPPER CHARGE, BOTH CHARGES PRESSED AT 10,000 P.S.I. (NOTE :-A VALUE OF .371 HAS BEEN USED SATISFACTORILY FOR "H")

B-LOWER CHARGE MAY BE MADE IN PELLET FORM AND RECONSOLIDATED IN CUP. ADVISORY :- ONE SOLID PELLET; DIA =.122, LENGTH=.206 SPECIFIC GRAVITY=1.70 MAX.

C-DISC AND CUP WILL BE ASSEMBLED PRIOR TO LOADING BY EITHER OF THE FOLLOWING METHODS:-
1-COAT INSIDE BOTTOM SURFACE OF DETONATOR CUP WITH ACID-PROOF BLACK PAINT AND SET DETONATOR DISC ON PAINT FILM. PAINT MUST NOT EXTEND OVER EXPOSED SURFACE OF THE DISC. ASSEMBLY MUST BE DRIED FOR 24 HOURS AT 75° F TO 125° F BEFORE LOADING.
2-COAT DETONATOR DISC WITH PLASTIC ADHESIVE APPROVED BY OFFICE, CHIEF OF ORDNANCE, SEAT DISC AND CURE PLASTIC. AVERAGE THICKNESS OF ADHESIVE MUST NOT EXCEED .0005 INCH ON EXPOSED PORTION OF DISC. COLOR OF ADHESIVE MUST BE RED.

D-LOAD IN THREE INCREMENTS AS FOLLOWS :-
FIRST INCREMENT, 26-2 MILLIGRAMS.
SECOND INCREMENT, 47-4 MILLIGRAMS.
THIRD INCREMENT, 47-4 MILLIGRAMS.

E-DETONATOR CLOSING DISC TO BE COATED WITH YELLOW LACQUER FOR IDENTIFICATION. COATING END OF CUP PERMITTED.

LINE NO	LIST OF SPECIFICATIONS AND STANDARDS	SPEC NUMBER	REQUIRED BY
1	AMMUNITION, EXCEPT SMALL ARMS AMMUNITION, GENERAL SPEC FOR	50-0-1	DWG 73-2-205
2			
3	COLOR CARD SUPPLEMENT	3-1	MIL-L-10287
4	CALCIUM RESINATE	50-11-89	DWG 73-2-205
5	GRAPHITE (FOR USE IN AMMUNITION)	JAN-G-155	DWG 73-2-205
6			
7	LACQUER, CELLULOSE NITRATE AND THINNER	MIL-L-10287	DWG 73-2-205
8	LEAD AZIDE	MIL-L-3055	DWG 73-2-205
9			
10	PAINT, ACID-PROOF, BLACK, FOR AMMUNITION	JAN-P-450	DWG 73-2-205
11	PAINT, VARNISH, LACQUER AND RELATED MATERIALS ; METHODS, ETC	TT-P-141	MIL-L-10287
12	PRIMER ELEMENTS AND DETONATORS, METAL PARTS FOR	50-48-14	DWG 73-2-183
13			
14	RDX	JAN-R-398	DWG 73-2-205
15	SIEVES, STANDARD, TESTING	RR-S-366	DWG 73-2-205
16	XYLENE	AXS-1479	DWG 73-2-205
17			
18			

THE SPECIFICATION AND STANDARD NUMBERS SHOWN ARE BASIC NUMBERS ONLY. WHEN REVISED A LETTER IS AFFIXED TO ITS BASIC NUMBER.
SPECIFICATIONS REFERRED TO IN THESE SPECIFICATIONS AND NOT LISTED HEREON, SHALL NOT APPLY.

LINE NO	LIST OF DRAWINGS	DRAWING NUMBER
1	ASSEMBLY	73-2-205
2	METAL PARTS	73-2-183
3	CARTON, PACKING	76-7-712
4	BOX, PACKING	76-7-715
5	PACKING AND MARKING OF BOX	20-4-430
6	LIST OF PARTS & LIST OF SPECS	73-2-183A

THIS DETONATOR FOR USE IN THE FOLLOWING:- FUZE, PI, M90A1.

SUPERSEDES 73-2-205 WITH CHANGE JULY 11, 1950.

0 IN.

LTR	DESCRIPTION	DATE	APPROVAL
5	ECO 16317	7-11-50	

REVISIONS

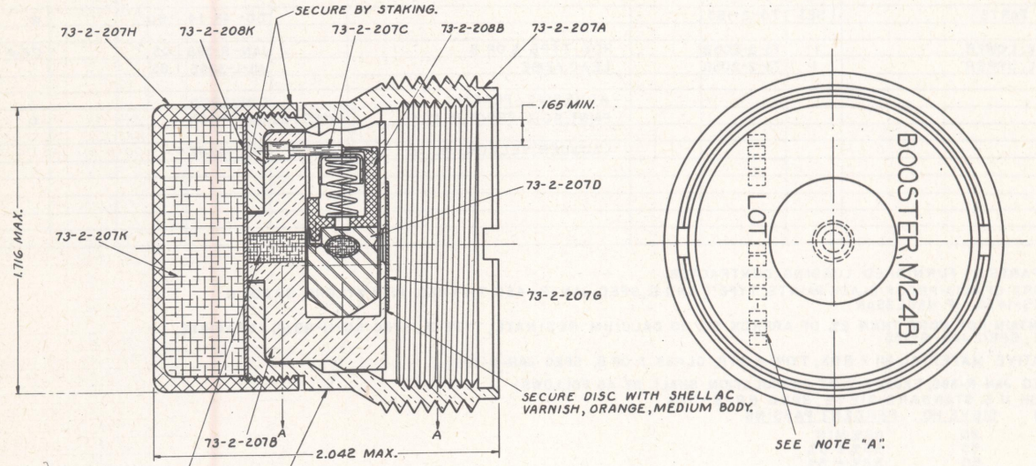
PHYSICAL PROPERTIES: YP, TS, EL 2, RA, BH, RH
NEXT ASSY / USED ON
APPLICATION: DO NOT / DO; APPLY PART NO. AS SPECIFIED
UNLESS OTHERWISE SPECIFIED DIMENSIONS ARE IN INCHES
TOLERANCES ON DECIMALS ANGLES FRACTIONS
MATERIAL
HEAT TREATMENT
FINAL PROTECTIVE FINISH
ORIGINAL DATE OF DRAWING JAN 17, 1944
DRAFTSMAN CHECKER
TRACER CHECKER
ENGINEER ENGINEER
SUBMITTED C R Sutton COL ORD DEPT
APPROVED BY ORDER OF THE CHIEF OF ORDNANCE J. M. Leslie ORD DEPT

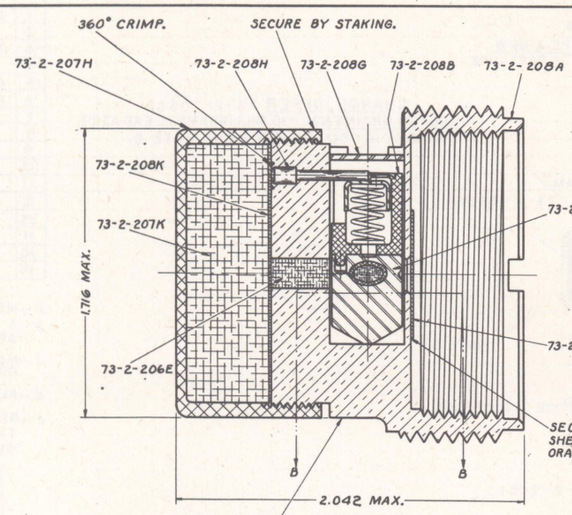
DETONATOR M30A1. LOADING ASSEMBLY

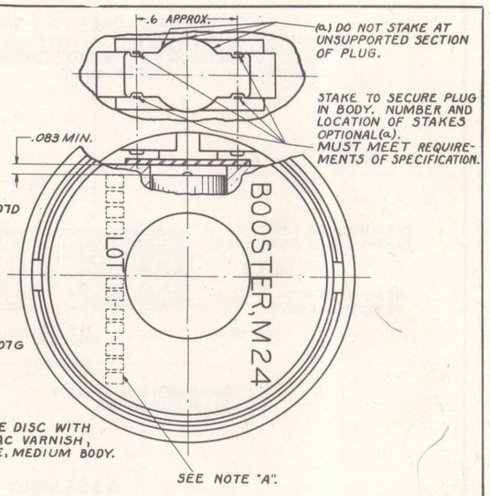
ORDNANCE DEPT DEPT OF THE ARMY

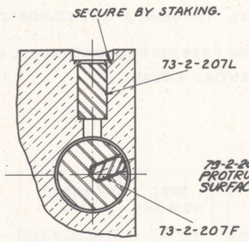
SCALE UNIT WT

DWG SIZE E 73-2-205 SHEET OF

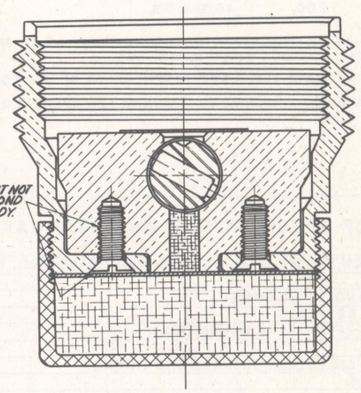


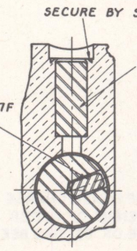






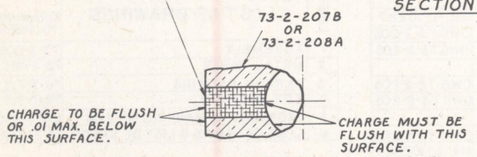
SECTION "A-A"



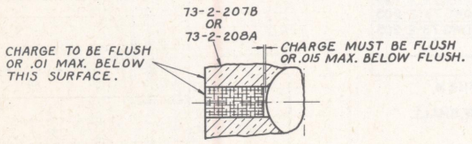


SECTION "B-B"

CHARGE, LEAD 73-2-206E
APPROX. 3.5 GRAINS (227 MILLIGRAMS) TETRYL MAY CONTAIN NOT MORE THAN 2% GRAPHITE, GRADE "A" OR "B". PRESS AT 10,000 LBS. PER SQ. IN.



VIEW SHOWING LOADING OF LEAD CHARGE



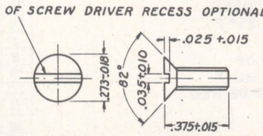
VIEW SHOWING LOADING OF LEAD CHARGE (ALTERNATIVE)

ASSEMBLY (M24BI BOOSTER) 73-2-206A9
ARMING REQUIREMENTS OF ROTOR:-
MUST NOT ARM AT 1500 R.P.M.
MUST ARM AND LOCK AT 2000 R.P.M.
FOR METHOD OF TEST SEE SPECIFICATION.

NOTE "A":-
LOADING CONTRACTOR TO STAMP WITH 3/32 MIN. LETTERS AND FIGURES, "BOOSTER, M24" OR "BOOSTER M24BI" AS APPLICABLE, YEAR OF MANUFACTURE AND LOADER'S LOT NUMBER.
SAMPLE STAMPING:- BOOSTER, M24
1944, LOT P.A.-12-345

NOTE:- SEE DRAWING 73-2-206A FOR PROTECTIVE FINISHES.

DESIGN OF SCREW DRIVER RECESS OPTIONAL.



SCREW, ROTOR HOUSING (M24BI BOOSTER) 73-2-206B3
STEEL, COMMERCIAL
SCREW, SELF-TAPPING, NO. 6-32 × 3/8, FLAT HEAD, COUNTERSUNK.

BOOSTER, M24 1944 LOT P.A.-12-345

X-TRACING REVISION MADE DURING LIMITED PROCUREMENT

ASSEMBLY (M24 BOOSTER) 73-2-206C9
ARMING REQUIREMENTS OF ROTOR:-
MUST NOT ARM AT 1500 R.P.M.
MUST ARM AND LOCK AT 2000 R.P.M.
FOR METHOD OF TEST SEE SPECIFICATION.

* **ALTERNATIVE MARKING(a)**
STAMP WITH 1/16 LETTERS AND FIGURES .01 DEEP ON PERIPHERY OF BODY "BOOSTER, M24" OR "BOOSTER, M24BI" AS APPLICABLE, YEAR OF MANUFACTURE AND LOADER'S LOT NUMBER.
(a) MAY BE STAMPED IN TWO LINES.

0 1 2 3 INCHES

LINE NO.	LIST OF DRAWINGS	DRAWING NUMBER
1	ASSEMBLY	73-2-206
2	LIST OF PARTS AND LIST OF SPEC.	73-2-206A
3	DETONATOR, M30, ASSEMBLY	73-2-205
4		
5	DETAILS	73-2-207
6	DETAILS	73-2-208
7	BOX, PACKING	76-7-623
8	PACKING AND MARKING OF BOX	20-4-194
9	PACKING CARTON	76-7-644

SUPERSEDES OLD TRACING 73-2-206 UNDER REVISION DATE OF SEPT. 8, 1944.

BOOSTERS, M24 & M24BI.
ASSEMBLIES AND DETAILS.

JAN. 10, 1944.

		REVISIONS
X	4	8-30-44
X	5	9-8-44
X	6	11-14-44
X	7	11-30-44
X	8	1-10-45
	9	2-13-45

DRG. PERTAINS TO

CLASS	DIVISION	DRAWING	FILE
73	2	206	

SYMBOL

D'FTSMAN	TRACER	ENGINEER
R.A.S.	R.A.S.	
CHECKER MAN	CHECKER S.C.	CHIEF D'FTSMAN M.T.

SUBMITTED:- Williams George COL., ORD. DEPT., U.S.A.

EXAMINED:- Paul L. Christensen LT. COL. ORD. DEPT., U.S.A.

APPROVED BY ORDER OF THE CHIEF OF ORDNANCE:- C.S. Reed by a.c. COL. ORD. DEPT., U.S.A.

D

ORDNANCE DEPT., U.S.A.

LIST OF PARTS

LINE NO.	NAME OF PART	NUMBER REQ'D PER COMPONENT	MATERIAL: SIZE OR FORM	MATERIAL: KIND	MATERIAL: GRADE	MATERIAL: SPEC. NUMBER	BOOSTER, M24: PIECE-MARK	BOOSTER, M24: APPROX. UNIT WT. (GRAINS)	BOOSTER, M24B1: PIECE-MARK	BOOSTER, M24B1: APPROX. UNIT WT. (GRAINS)	REMARKS
1	ASSEMBLY (M24B1 BOOSTER)					AXS-1201			73-2-206A		
2	ASSEMBLY (M24 BOOSTER)					AXS-1201	73-2-206C				
3	DETONATOR ASSEMBLY, M30	1				PXS-1048	73-2-205A		73-2-205A		
4											
5	LOCK ASSEMBLY						73-2-208B		73-2-208B		
6	ROTOR ASSEMBLY						73-2-207D		73-2-208D		
7											
8	BODY (M24B1 BOOSTER)	1	STRIP	BRASS	COMP. "C"	QQ-B-611			73-2-207A		
9	BODY (M24 BOOSTER)	1	BAR	BRASS	COMP. "B"	QQ-B-611	73-2-208A				(m)
10											
11	CHARGE, LEAD	1		TETRYL		50-13-4	73-2-206E		73-2-206E		
12	CUP, BOOSTER	1	CASTING	ALUMINUM-BASE-ALLOY; DIE-CASTING	CLASS 2	QQ-A-591	73-2-207H		73-2-207H		(c)
13	CUP, LOCK	1	STRIP	STEEL	WD1010	57-136	73-2-208D		73-2-208D		(pa)(a)
14											
15	DISC, BODY	1	SHEET	70 LB. KRAFT WRAPPING PAPER	GRADE "B", NO. 2	UU-P-268	73-2-208K		73-2-208K		
16											
17	DISC, ROTOR COVER	1	SHEET	ONIONSKIN PAPER		50-11-49	73-2-207G		73-2-207G		
18	HOUSING, ROTOR (M24B1 BOOSTER)	1	BAR	BRASS	COMP. "B"	QQ-B-611			73-2-207B		(m)(b)
19											
20	LOCK	1	CASTING	ZINC-BASE-ALLOY; DIE-CASTING	CLASS A	57-93-2	73-2-208F		73-2-208F		(pc)
21											
22	PELLET, BOOSTER	1		TETRYL		50-13-4	73-2-207K		73-2-207K		
23	PIN, BODY (M24 BOOSTER)	1	BAR	STEEL	WD X 1314	57-107	73-2-208H				(d)(pa)
24	PIN, ROTOR	1	BAR	STEEL	WD1020 OR WDX1314	57-107	73-2-207F		73-2-207F		(pa)(e)
25	PIN, ROTOR HOUSING (M24B1 BOOSTER)	1	BAR	STEEL	WD X 1314	57-107			73-2-207C		(d)(pa)
26	PLUG, BODY (M24B1 BOOSTER)	1	BAR	STEEL	WD1020 OR WDX1314	57-107			73-2-207L		(pd)(pa)(pb)(b)(e)
27	PLUG, BODY (M24 BOOSTER)	1	BAR	STEEL	WD1020 OR WDX1314	57-107	73-2-208E				(pd)(pa)(pb)(b)(e)
28	PLUG, ROTOR CAVITY CLOSING (M24)	1	SHEET	STEEL	WD 1010	57-136	73-2-208G				(pd)(pa)(a)
29											
30	ROTOR	1	BAR	STEEL	WDX 1112	57-107	73-2-207E		73-2-207E		(d)(m)(e)(f)(b)(pa)
31											
32											
33	SCREW, ROTOR HOUSING (M24B1 BOOSTER)	2		STEEL			COMMERCIAL		73-2-206B		(g)(pa)(pb)(pd)
34	SPRING, LOCK	1	WIRE	STEEL, MUSIC SPRING	WD1085W	48-18	73-2-208C		73-2-208C		(pa)(pb)
35											
36											
37				CEMENT, PETTMAN		50-11-8					
38											
39				GRAPHITE	A OR B	50-11-41					
40											
41				VARNISH, SHELLAC, ORANGE	MEDIUM BODY	TT-V-91					(h)
42											

(a) ALTERNATIVE:-COMMERCIAL BRASS, STRIP OR SHEET, COMP. "C", SPEC. QQ-B-611.
(b) ALTERNATIVE:-COMMERCIAL BRASS, ROD, COMP. "D", SPEC. QQ-B-611.
(c) ALTERNATIVE:-ALUMINUM-BASE-ALLOY, DIE-CASTING, CLASS 5, SPEC. AXS-679 (t)
(d) ALTERNATIVE:-STEEL, WD 1015 OR WD 1020, COLD-DRAWN, SPEC. 57-107. (pa)
(e) ALTERNATIVE:-COMMERCIAL BRASS, ROD, COMP. "B"; SPEC. QQ-B-611.
(f) ALTERNATIVE:-POWDERED BRASS, COMMERCIAL. (k)
(g) SCREW, SELF-TAPPING, NO. 6-32 X 3/8, FLAT HEAD, COUNTERSUNK.
(h) 36.4% MIN. STICK LAC.
(k) SPECIFIC GRAVITY 7.7 MIN.
CHEMICAL COMPOSITION:-
COPPER - - - - - - - - - - 70% ± 1.5%
TIN - - - - - - - - - - 00.10% MAX.
LEAD - - - - - - - - - - 00.25% MAX.
IRON - - - - - - - - - - 00.25% MAX.
NICKEL - - - - - - - - - - 00.10% MAX.
ANTIMONY - - - - - - - - 00.10% MAX.
ZINC - - - - - - - - - - BALANCE.
(m) ALTERNATIVE:-
COMMERCIAL BRASS, FORGING OR ROD, COMP. "A", SPEC. QQ-B-611.
COMMERCIAL BRASS, PLASTER MOLD CASTING, COMP. "B", SPEC. QQ-B-611 (EXCEPT FOR PROCESS OF MANUFACTURE.)
BRASS, HIGH PRESSURE DIE CASTING. (r)
(p) PROTECTIVE FINISHES:-
(pa) TYPE I, CLASS TS OR RSC, SPEC. 57-0-2.
(pb) TYPE I, CLASS RS, SPEC. 57-0-2.
(pc) NICKEL PLATE OR SURFACE TREATMENT APPROVED BY THE OFFICE OF THE CHIEF OF ORDNANCE, INCLUDING CRONAK OR ANOZINC TREATMENTS (APPLIES TO ZINC DIE-CASTINGS ONLY.)
(pd) TYPE II, CLASS B OR TYPE III, CLASS A, GRADE 2 OR 3, SPEC. 57-0-2.

(r) DIE CASTING COMPOSITION:-
COPPER - - - - - - - - - - 58% TO 64%
LEAD - - - - - - - - - - .75% TO 3.%
TIN - - - - - - - - - - 1% MAX.
IRON - - - - - - - - - - 1% MAX.
ALUMINUM - - - - - - - - .25% MAX.
TOTAL OTHER (EXCEPT ZINC) - - - .5% MAX.
ZINC - - - - - - - - - - BALANCE.

(t) ALUMINUM BASE ALLOY DIE-CASTING, CLASS I, SPEC. QQ-A-591 (EXCEPT THAT PART MUST BE PRODUCED BY COLD CHAMBER PROCESS IF CLASS I ALLOY IS USED).

LIST OF SPECIFICATIONS

LINE NO.	LIST OF SPECIFICATIONS	SPEC NUMBER *	REQUIRED BY
1	ALUMINUM-BASE-ALLOY; DIE-CASTINGS	QQ-A-591	DRG. 73-2-207
2	ALUMINUM-BASE-ALLOY; DIE-CASTINGS	AXS-679	DRG. 73-2-207
3	AMMUNITION, EXCEPT SMALL ARMS AMM., GENERAL SPEC. FOR	50-0-1	DRG. 73-2-206
4			
5	BOOSTERS, M24 AND M24B1, LOADING, ASSEMBLING AND PACKING	AXS-1201	DRG. 73-2-206
6	BOOSTERS, M24 AND M24B1, METAL PARTS FOR	AXS-1200	DRG. 73-2-206
7	BRASS, COMMERCIAL; BARS, PLATES, RODS, SHAPES, SHEETS AND STRIPS	QQ-B-611	DRG. 73-2-208
8			
9			
10	CEMENT, PETTMAN	50-11-8	DRG. 73-2-207
11			
12	FINISHES, PROTECTIVE, FOR IRON AND STEEL PARTS	57-0-2	DRG. 73-2-206A
13	GRAPHITE (FOR USE IN AMMUNITION)	50-11-41	DRG. 73-2-206
14			
15			
16	METALS; GENERAL SPECIFICATION FOR INSPECTION OF	QQ-M-151	57-107
17			
18	PAPER; GENERAL SPECIFICATIONS	UU-P-31	50-11-49
19	PAPER; ONIONSKIN	50-11-49	DRG. 73-2-207
20	PAPER; KRAFT, WRAPPING	UU-P-268	DRG. 73-2-208
21			
22	STEEL, CARBON AND ALLOY, BARS	57-107	DRG. 73-2-208
23	STEEL, CARBON AND ALLOY, SHEETS AND STRIPS	57-136	DRG. 73-2-207
24	STEEL, WIRE; MUSIC SPRING	48-18	DRG. 73-2-208
25			
26	TETRYL	50-13-4	DRG. 73-2-206
27			
28	VARNISH, SHELLAC	TT-V-91	DRG. 73-2-206
29			
30	ZINC-BASE-ALLOY; DIE-CASTINGS	57-93-2	DRG. 73-2-208

* THE SPECIFICATION NUMBERS SHOWN ARE BASIC NUMBERS ONLY. WHEN A SPECIFICATION IS REVISED A LETTER IS AFFIXED TO ITS BASIC NUMBER. SPECIFICATIONS REFERRED TO IN THESE SPECIFICATIONS AND NOT LISTED HEREON, SHALL NOT APPLY.

SUPERSEDES OLD TRACING 73-2-206A
UNDER REVISION DATE OF SEPT. 8, 1944

X - TRACING REVISION MADE DURING LIMITED PROCUREMENT

BOOSTERS, M24 AND M24B1.
LIST OF PARTS AND LIST OF SPECIFICATIONS

JANUARY 10, 1944

REVISIONS		
X 2	8-30-44	
X 3	9-8-44	
X 4	11-14-44	
X 5	11-30-44	
6	2-13-45	

DRG. PERTAINS TO
73-2-206
D

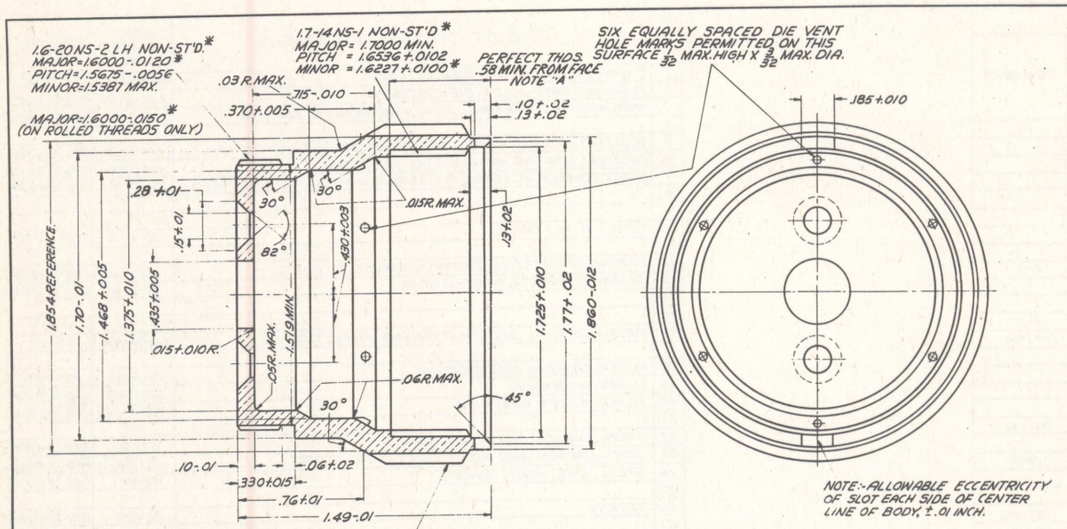
CLASS	DIVISION	DRAWING	FILE
73	2	206A	

SYMBOL

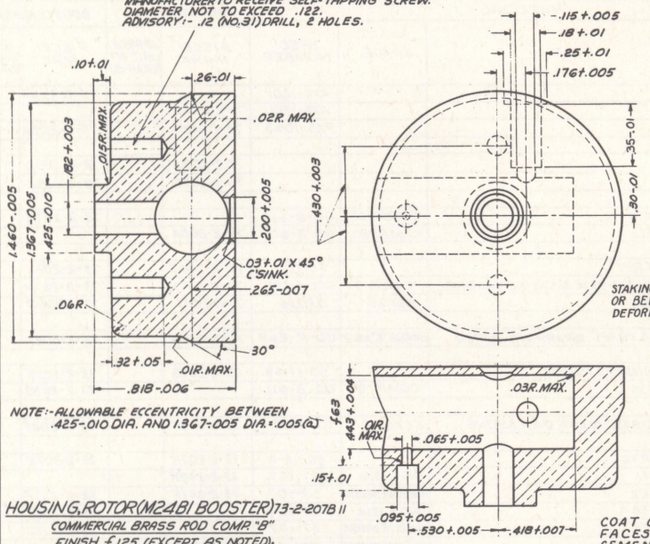
D'FTSMAN	TRACER	ENGINEER
A.P.C.	A.P.C.	
CHECKER	CHECKER	CHIEF D'FTSMAN
MAN	C.O.	M.T.

SUBMITTED:- Milburn Crego, COL., ORD. DEPT., U.S.A.
EXAMINED:- Paul L. Christensen, LT. COL., ORD. DEPT., U.S.A.
APPROVED BY ORDER OF THE CHIEF OF ORDNANCE:- C.S. Reed, COL., ORD. DEPT., U.S.A.

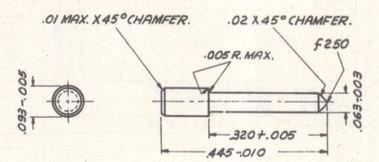
ORDNANCE DEPT., U.S.A.



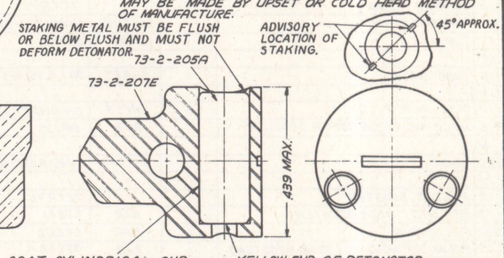
BODY (M24B1 BOOSTER) 73-2-207A10
COMMERCIAL BRASS STRIP OR SHEET, COMP. C"
FINISH f 125
SEE NOTE (b) UNDER PC.MK. 73-2-207B
STRESS RELIEF ANNEAL AFTER FORMING.



HOUSING, ROTOR (M24B1 BOOSTER) 73-2-2078 11
COMMERCIAL BRASS ROD COMP "B"
FINISH f 125 (EXCEPT AS NOTED).
NOTE(b):-CONTROL PHYSICAL PROPERTIES OF MATERIAL USED TO COMPLY WITH THE METAL PARTS SPECIFICATION REQUIREMENTS.



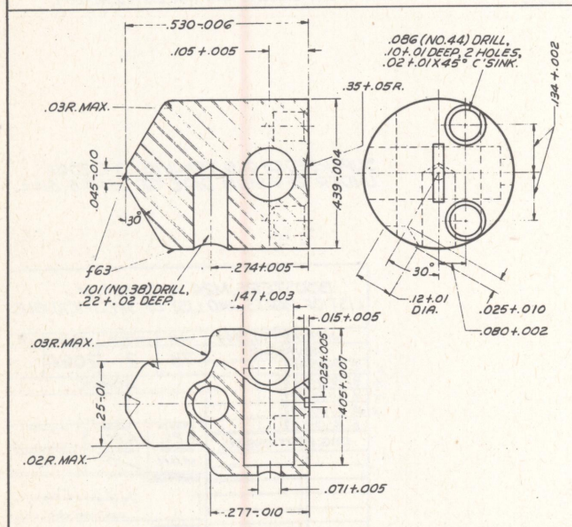
PIN, ROTOR HOUSING (M24B1 BOOSTER) 73-2-207C
STEEL, WDX1314, COLD-DRAWN
FINISH f 125
MAY BE MADE BY UPSET OR COLD HEAD METHOD OF MANUFACTURE.



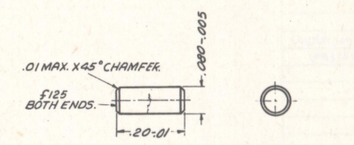
COAT CYLINDRICAL SURFACES WITH PETTMAN CEMENT AND STAKE LIGHTLY WHILE WET. CEMENT MUST NOT EXTEND OVER DETONATOR DISC.

YELLOW END OF DETONATOR TO BE VISIBLE WHEN ASSEMBLED.

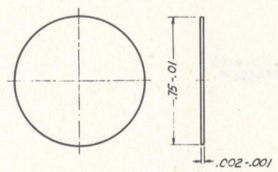
ROTOR ASSEMBLY 73-2-207D 11



ROTOR 73-2-207E
STEEL, WDX1112, COLD-DRAWN
FINISH f 125 (EXCEPT AS NOTED).
NOTE:- MAY BE FORMED BY FORGING OR HEADING.



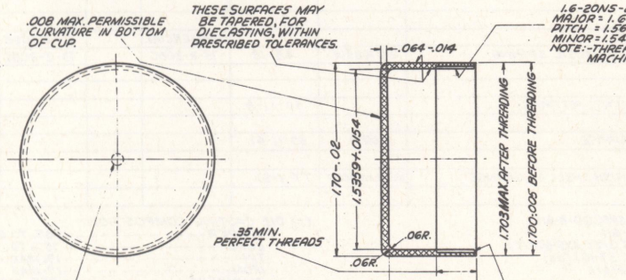
PIN, ROTOR 73-2-207F5
STEEL, WD1020 OR WDX1314, COLD-DRAWN
FINISH AS NOTED.



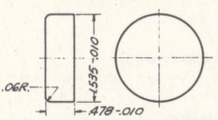
DISC, ROTOR, COVER 73-2-207G
ONIONSKIN PAPER
DIAMETER DIMENSION CONTROLS TOOL MANUFACTURE.

SEE DRAWING 73-2-206A FOR PROTECTIVE FINISHES AND ALTERNATIVE MATERIALS.

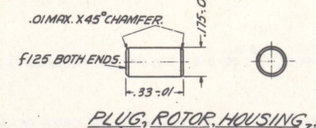
REMOVE ALL BURRS.



CUP, BOOSTER 73-2-207H7
ALUMINUM-BASE ALLOY, DIE-CASTING, CLASS 2.
ALLOWABLE ECCENTRICITY BETWEEN 1.6-20 NS-2 L.H (NON-STD) THREAD ON BOOSTER CUP AND 1.700-.015 DIA. = .01(a)



PELLET, BOOSTER 73-2-207K1
APPROX. 340 GRAINS (22 GRAMS) TETRYL.
MAY CONTAIN NOT MORE THAN 2% GRAPHITE, GRADE "B".
300 GRAINS MINIMUM WEIGHT AS LOADED.
ADVISORY DATA:-PELLETING PRESSURE APPROX. 5000 LBS. PER SQ. INCH.
SPECIFIC GRAVITY, ALL PLACES, 1.40 TO 1.55



PLUG, ROTOR HOUSING (M24B1 BOOSTER) 73-2-207L7
STEEL, WD1020 OR WDX1314 COLD-DRAWN
FINISH AS NOTED.

SCALE, INCHES 1/1; 2/1; 3/1; 6/1

NOTE:-(a) WHEN MEASURING ECCENTRICITY BY MEANS OF A DIAL INDICATOR, THE TOTAL READING OF THE DIAL IS TWICE THE ECCENTRICITY.

X - TRACING REVISION MADE DURING LIMITED PROCUREMENT.

SUPERSEDES OLD TRACING 73-2-207 UNDER REVISION DATE OF SEPT. 8, 1944.

BOOSTERS M24 AND M24B1 DETAILS.

JANUARY 10, 1944.

	CLASS	DIVISION	DRAWING	FILE
	73	2	207	

REVISIONS

X	5	8-30-44	10	2-13-45
X	6	9-8-44	11	8-15-45
X	7	11-16-44		
X	8	11-30-44		
X	9	1-10-45		

SYMBOL

DRG. PERTAINS TO: 73-2-206

DFTSMAN	TRACER	ENGINEER
C.J.F.	C.J.F.	

CHECKER	CHECKER	CHIEF D'FTSMAN
MAN		M.T.

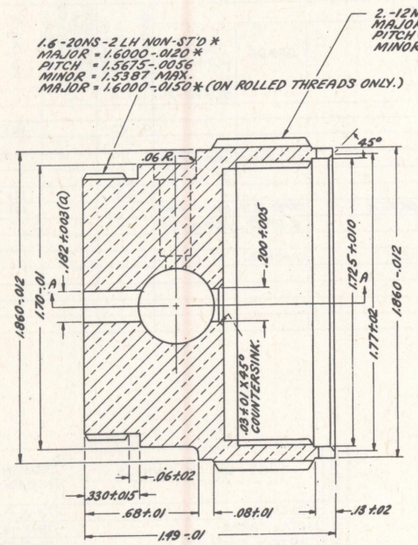
SUBMITTED:
Milton Briggs
COL., ORD. DEPT., U.S.A.

EXAMINED:
Paul L. Christensen
LT. COL., ORD. DEPT., U.S.A.

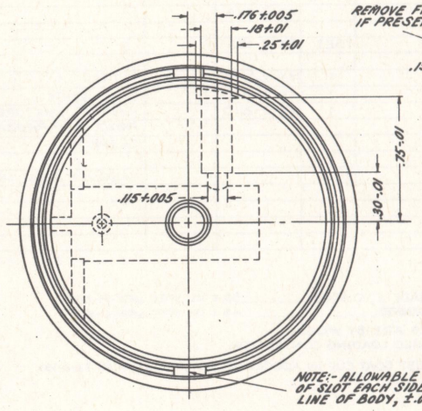
APPROVED BY ORDER OF THE CHIEF OF ORDNANCE:
C.S. Reed by a.i.a.
COL., ORD. DEPT., U.S.A.

D

ORDNANCE DEPT., U.S.A.

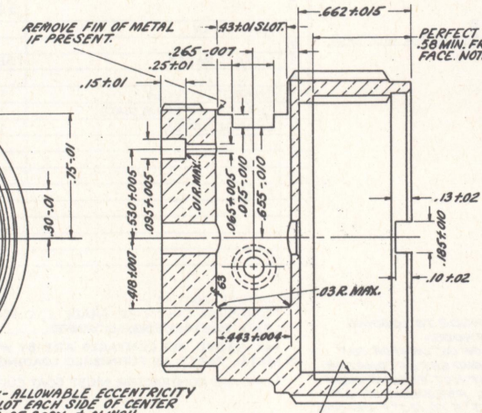


(a):- ECCENTRICITY PERMITTED BETWEEN 1.82±.003 HOLE AND THE AXIAL CENTER LINE OF THE BODY EQUALS .0025 (.005 DIAL READING).



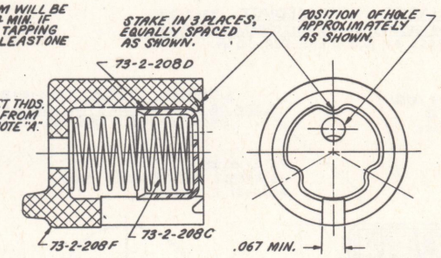
NOTE:- ALLOWABLE ECCENTRICITY OF SLOT EACH SIDE OF CENTER LINE OF BODY, ±.01 INCH.

NOTE "A":- PERFECT THREAD FORM WILL BE CHECKED ONLY TO .544 MIN. IF THREAD IS FORMED BY TAPPING WITH TAP HAVING AT LEAST ONE PITCH LEAD.

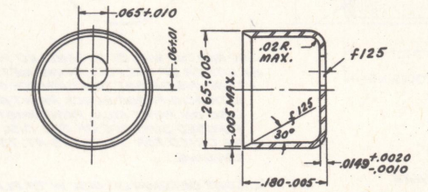


BODY (M24 BOOSTER) 73-2-208 A 9
COMMERCIAL BRASS ROD, COMPOSITION "B"
FINISH f125 (EXCEPT AS NOTED.)

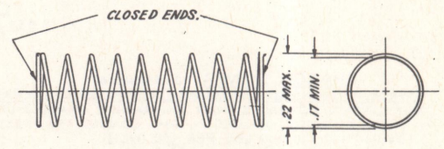
NOTE:- CONTROL PHYSICAL PROPERTIES OF MATERIAL USED TO COMPLY WITH REQUIREMENTS OF THE METAL PARTS SPECIFICATION.



LOCK ASSEMBLY 73-2-208 B1



CUP, LOCK 73-2-208 D5
STEEL, WD 1010, COLD-ROLLED, TEMPER NO.4, (SOFT SKIN-ROLLED) FINISH NO.1 (DULL)
FINISH AS NOTED.



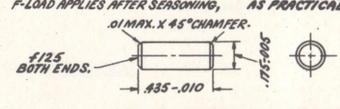
SPRING, LOCK 73-2-208C
STEEL, WIRE, MUSIC SPRING, WD 1085W

REQUIREMENTS

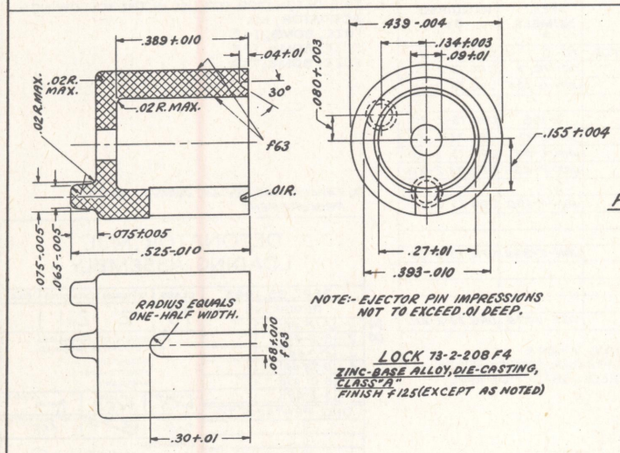
A-SOLID HEIGHT NOT OVER .15 INCH.
B-SEASON THOROUGHLY AFTER WINDING.
C-TREAT, TO REMOVE EMBRITTLEMENT, WITHIN 24 HOURS AFTER PLATING.
D-MUST MEET ARMING LIMITS OF ROTOR AS SPECIFIED UNDER ASSEMBLY (OCCASIONAL CHECK WILL BE MADE AFTER COMPRESSION FOR AT LEAST 24 HOURS, AT THE ASSEMBLED HEIGHT).

ADVISORY DATA (MAY BE VARIED TO MEET REQUIREMENTS).

A-DIAMETER OF WIRE = .013 INCH.
B-TOTAL NUMBER OF COILS = 11
C-NUMBER OF ACTIVE COILS = 9
D-ADJUST FREE HEIGHT TO MEET LOAD AT .32 INCH. SUGGESTED TRIAL FREE HEIGHT = .675 INCH.
E-LOAD AT .32 INCH = 3.50 OZ.
F-LOAD APPLIES AFTER SEASONING, PLATING, AND TREATMENT TO REMOVE EMBRITTLEMENT.
G-SEASON BY HEATING TO 500°F. FOR 30 MINUTES.
H-TO REMOVE EMBRITTLEMENT, HEAT TO 300°F. FOR AT LEAST 30 MINUTES AS SOON AFTER PLATING AS PRACTICABLE.

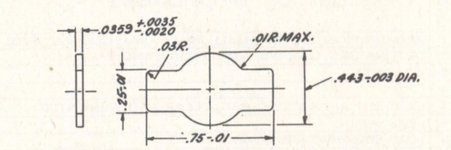


PLUG, BODY (M24 BOOSTER) 73-2-208E5
STEEL, WD 1020 OR WDX 1314, COLD-DRAWN
FINISH AS NOTED.

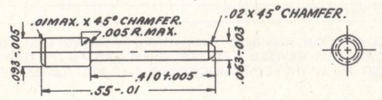


NOTE:- EJECTOR PIN IMPRESSIONS NOT TO EXCEED .01 DEEP.

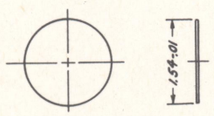
LOCK 73-2-208 F4
ZINC-BASE ALLOY, DIE-CASTING, CLASS "A"
FINISH f125 (EXCEPT AS NOTED)



PLUG, ROTOR CAVITY CLOSING (M24 BOOSTER) 73-2-208G7
STEEL, WD 1010, COLD-ROLLED, TEMPER NO.2, (HALF-HARD) FINISH NO.1 (DULL)



PIN, BODY (M24 BOOSTER) 73-2-208H 6
STEEL, WDX 1314, COLD-ROLLED
FINISH "f125"
MAY BE MADE BY UPSET OR COLD HEAD METHOD OF MANUFACTURE.



DISC, BODY 73-2-208K1
70 LB. KRAFT WRAPPING PAPER, GRADE B, NO. 2
DIAMETER DIMENSION CONTROLS TOOL MANUFACTURE.

X-TRACING REVISION MADE DURING LIMITED PROCUREMENT

NOTE:- SEE DRAWING 73-2-206 A FOR PROTECTIVE FINISHES AND ALTERNATIVE MATERIALS.

REMOVE ALL BURRS.

SCALE, INCHES: 3/7, 6/7, 9/7

SUPERSEDES OLD TRACING 73-2-208, UNDER REVISION DATE OF SEPT. 8, 1944.

BOOSTERS, M24 AND M24B1. DETAILS.

JANUARY 10, 1944.

REVISIONS		
5	8-30-44	X
6	9-8-44	X
7	11-14-44	X
8	2-13-45	
9	8-15-45	

DRG. PERTAINS TO 73-2-206

CLASS	DIVISION	DRAWING	FILE
73	2	208	

SYMBOL

DFTSMAN E.P.B. | TRACER E.P.B. | ENGINEER

CHECKED MAN | CHECKED E.C. | CHIEF DFTSMAN M.T.

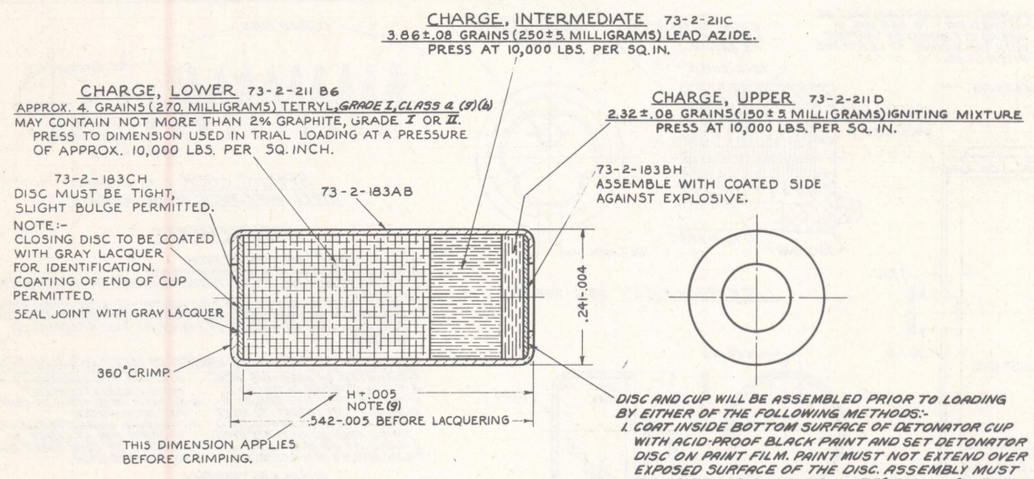
SUBMITTED: William Lange, COL., ORD. DEPT., U.S.A.

EXAMINED: Paul L. Christensen, LT. COL., ORD. DEPT., U.S.A.

APPROVED BY ORDER OF THE CHIEF OF ORDNANCE: C.S. Reed 4th A.A., COL., ORD. DEPT., U.S.A.

D

ORDNANCE DEPT., U.S.A.



ASSEMBLY 73-2-211A6

DISC AND CUP WILL BE ASSEMBLED PRIOR TO LOADING BY EITHER OF THE FOLLOWING METHODS:-

1. COAT INSIDE BOTTOM SURFACE OF DETONATOR CUP WITH ACID-PROOF BLACK PAINT AND SET DETONATOR DISC ON PAINT FILM. PAINT MUST NOT EXTEND OVER EXPOSED SURFACE OF THE DISC. ASSEMBLY MUST BE DRIED FOR 24 HOURS AT 75°F TO 125°F BEFORE LOADING.
2. COAT DETONATOR DISC WITH PLASTIC ADHESIVE APPROVED BY OFFICE, CHIEF OF ORDNANCE, SEAT DISC AND CURE PLASTIC. AVERAGE THICKNESS OF ADHESIVE MUST NOT EXCEED .0005 INCH ON EXPOSED PORTION OF DISC. COLOR OF ADHESIVE MUST BE RED.

NOTES:-

(g) ESTABLISH "H" AND WEIGHT OF LOWER CHARGE REQUIRED TO OBTAIN TIGHT CLOSING DISC, AS SHOWN, USING MEAN WEIGHTS OF UPPER AND INTERMEDIATE CHARGES, ALL CHARGES PRESSED AT 10,000 P.S.I. (NOTE:- A VALUE OF .520 HAS BEEN USED SATISFACTORILY FOR "H").

(b) LOWER CHARGE MAY BE MADE IN PELLET FORM AND RECONSOLIDATED IN CUP. ADVISORY:- TWO SOLID PELLETS:- DIA. = .20, LENGTH = .20, SPECIFIC GRAVITY = 1.5 MAX.

LIST OF PARTS

LINE NO.	NAME OF PART	NUMBER REQ'D PER COMPONENT	PIECE-MARK	MATERIAL: SIZE OR FORM	MATERIAL: KIND	MATERIAL: GRADE	MATERIAL: SPEC. NUMBER	APPROXIMATE UNIT WEIGHT (GRAINS)	APPROX. GROSS WT. OF RAW STOCK PER 1000 ASSEMBLIES	REMARKS
1	ASSEMBLY		73-2-211A				50-78-7	21.4		
2										
3	METAL PARTS	1 SET	73-2-183					11.25		(d)
4										
5	CHARGE, LOWER	1	73-2-211B		TETRYL	I, CLASS 4	JAN-T-339	4.		
6	CHARGE, INTERMEDIATE	1	73-2-211C		LEAD AZIDE		50-13-12	3.9		
7	CHARGE, UPPER	1	73-2-211D		IGNITING MIXTURE			2.3		(c)
8					PAINT, ACID-PROOF, BLACK	TYPES I & II	JAN-P-450			(f)
9					GRAPHITE	I OR II	JAN-G-155			
10										
11					LACQUER, GRAY, NO. 124	CLASS "B"	3-158			
12										
13										
14										
15										

(c) IGNITING MIXTURE :-
POTASSIUM CHLORATE, GRADE I, CLASS 6 ——— 55.± 1% SPEC. JAN-P-150
LEAD THIOCYANATE (SULPHOCYANATE) ——— 45.± 1% SPEC. JAN-L-65
ALL ABOVE PERCENTAGES ARE BY WEIGHT.

(d) METAL PARTS AS FURNISHED LOADING CONTRACTOR.
LOADING CONTRACTOR MUST COAT CUP IN ACCORDANCE WITH DRAWING 73-2-183.

(f) A MIXTURE OF ACID-PROOF BLACK PAINTS, TYPES I AND II, SPEC JAN-P-450 THINNED WITH XYLENE, SPEC AXS-1479, IF NECESSARY.

LINE NO.	LIST OF DRAWINGS	DRAWING NUMBER
1	ASSEMBLY	73-2-211
2	METAL PARTS	73-2-183
3	CARTON, PACKING	76-7-712
4	BOX, PACKING	76-7-715
5	PACKING AND MARKING OF BOX	20-4-430
6	LIST OF PARTS AND LIST OF SPECS.	73-2-183A

LINE NO.	LIST OF SPECIFICATIONS	SPEC. NUMBER *	REQUIRED BY
1	AMMUNITION, EXCEPT SMALL ARMS AMM., GENERAL SPEC. FOR	50-0-1	DRG. 73-2-211
2	DETONATORS, LOADING, ASSEMBLING, AND PACKING	50-78-7	DRG. 73-2-211
3	GRAPHITE	JAN-G-155	DRG. 73-2-211
4			
5	LACQUER, NITROCELLULOSE; CLEAR AND PIGMENTED	3-158	DRG. 73-2-211
6	LEAD AZIDE	50-13-12	DRG. 73-2-211
7	LEAD THIOCYANATE (SULPHOCYANATE)	JAN-L-65	DRG. 73-2-211
8	PAINT, ACID-PROOF, BLACK, FOR AMMUNITION	JAN-P-450	DRG. 73-2-211
9	PAINTS AND RELATED MATERIALS, GENERAL SPEC. FOR	3-1	3-158
10	POTASSIUM CHLORATE (FOR USE IN AMMUNITION)	JAN-P-150	DRG. 73-2-211
11			
12			
13	TETRYL	JAN-T-339	DRG. 73-2-211
14			
15			
16			
17	XYLENE (NITRATION GRADE)	AXS-1479	DRG. 73-2-211

* THE SPECIFICATION NUMBERS SHOWN ARE BASIC NUMBERS ONLY. WHEN A SPECIFICATION IS REVISED A LETTER IS AFFIXED TO ITS BASIC NUMBER. SPECIFICATIONS REFERRED TO IN THESE SPECIFICATIONS AND NOT LISTED HEREON, SHALL NOT APPLY.

0 IN.

THIS DETONATOR FOR USE IN THE FOLLOWING:-
ACTIVATOR, M1.
FUZE, BOMB, T47.
FUZE, BOMB, T48.
FUZE, BOMB, T49.

(x) TRACING WAS REVISED DURING LIMITED PROCUREMENT.

DETONATOR, M31. LOADING ASSEMBLY.

SEPT. 25, 1943

CLASS	DIVISION	DRAWING	FILE
73	2	211	

REVISIONS

(x)	1	2-17-44
(x)	2	3-9-44
	3	5-1-44
	4	8-28-44
	5	8-15-45
	6	3-5-48

TOLERANCE ON DIMENSIONS NOT OTHERWISE SPECIFIED
DECIMAL ±
FRACTIONAL ±
ANGULAR ±

DRAFTSMAN WCS | TRACER WCS | ENGINEER

CHECKER SAG | SHEETER JH | CHIEF DRAFTSMAN M.T.

DRG. PERTAINS TO

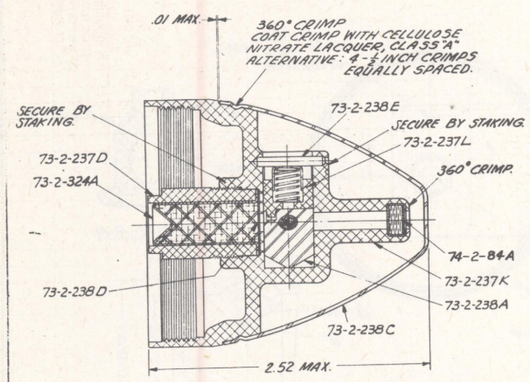
SUBMITTED:- Wilhelm Grigs COL., ORD. DEPT., U.S.A.

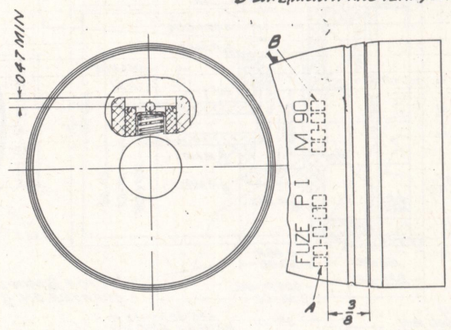
EXAMINED:- C.H. Hofstetter COL., ORD. DEPT., U.S.A.

APPROVED BY ORDER OF THE CHIEF OF ORDNANCE:- S.P. Stribling 4 Aug 48 COL., ORD. DEPT., U.S.A.

D

ORDNANCE DEPT., U.S.A.





BEFORE ASSEMBLING, STAMP OGIVE AS INDICATED WITH LETTERS AND FIGURES 1/16 OR 1/8 INCH HIGH AND .01 DEEP.
A-LOADERS LOT NUMBER.
B-DATE(MONTH AND YEAR) LOADED.

ASSEMBLY 73-2-236A : 5

ARMING REQUIREMENT OF ROTOR:-
MUST NOT ARM AT 3000 R. P. M.
MUST ARM AT 6000 R. P. M.

LIST OF PARTS

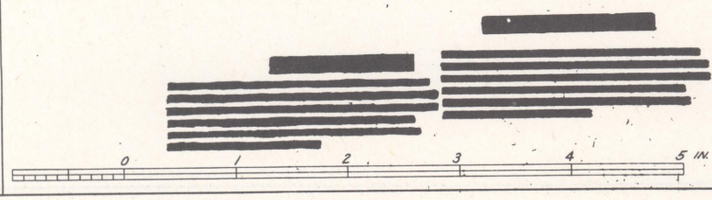
LINE NO.	NAME OF PART	NUMBER REQ'D PER COMPONENT	PIECE-MARK	MATERIAL: SIZE OR FORM	MATERIAL: KIND	MATERIAL: GRADE	MATERIAL: SPEC. NUMBER	APPROXIMATE UNIT WEIGHT (GRAINS)	APPROX. GROSS WT. OF RAW STOCK PER 1000 ASSEMBLIES	REMARKS
1	ASSEMBLY		73-2-236A				50-17-37	.256 LB.		
2	AUXILIARY DETONATOR ASSEMBLY, M43	1	73-2-324A					45.		
3	DETONATOR ASSEMBLY, M30A1	1	73-2-205A				50-78-7	3.8		
4	LOCK ASSEMBLY		73-2-237L					82.5		
5	PRIMER PERCUSSION ASSEMBLY, M56	1	74-2-84A					11.2		
6	ROTOR ASSEMBLY		73-2-238A					96.5		
7										
8	BODY	1	73-2-237K	DIE-CASTING	ALUMINUM-BASE-ALLOY	CLASS 2	QQ-A-591	915.		(a)(g)
9										
10										
11										
12										
13	CUP, LOCK	1	73-2-237N	STRIP	STEEL	WD 1010	57-136	4.55		(Pd)
14										
15										
16	DISC	1	73-2-238D	SHEET	ONIONSKIN PAPER		JAN-P-157			
17										
18										
19	HOLDER, AUXILIARY DETONATOR	1	73-2-237D	ROD	ALUMINUM-ALLOY	CONDITION T	QQ-A-351	120.		
20										
21	LOCK	1	73-2-237M	DIE-CASTING	ZINC-BASE-ALLOY	COMP-A	QQ-Z-363	76.		(Pc)
22										
23	OGIVE	1	73-2-238C	STRIP	STEEL	WD 1008 TO 1030	57-136	.512.		(Pd)(Pb)
24	PIN, BODY	1	73-2-238E	BAR	STEEL	FS 1100 TO 1035	QQ-S-633	3.8		(Pa)
25										
26	ROTOR	1	73-2-238B	BAR	STEEL	FS B 1113	QQ-S-633	83.8		(c)(f)(Pa)
27	SPRING, LOCK	1	73-2-237P	WIRE	STEEL, MUSIC SPRING	COMP A	QQ-W-470	1.95		(Pa)(Pd)
28										
29					CEMENT, PETTMAN	TYPE A	JAN-C-99			
30					LACQUER, CELLULOSE NITRATE	TYPE II	MIL-L-10287			
31										
32					LAYOUT FLUID, BLUE, FAST-DRYING		COMMERCIAL			
33										
34										
35										

(a) ALTERNATIVE MATERIAL:- ALUMINUM-ALLOY, CONDITION "T"; SPEC. QQ-A-351.

(c) ALTERNATIVE MATERIAL:-(e) STEEL, FS1117, AS-COLD-FINISHED, SPEC QQ-S-633 (Pa)
(d) ALTERNATIVE MATERIAL:-(e) COMMERCIAL BRASS, ROD, COMPOSITION "B", SPEC QQ-B-611.
(e) ALTERNATIVE MATERIALS ARE INTENDED TO BE USED ONLY WHEN PRESCRIBED MATERIALS ARE NOT AVAILABLE.

(g) ALTERNATIVE:-(e) ALUMINUM BASE ALLOY, CLASS I, SPEC. QQ-A-591 MAY BE USED PROVIDED PART IS FABRICATED BY COLD CHAMBER PROCESS.

CLASSIFICATION CHANGED TO UNCLASSIFIED BY AUTHORITY OF OCM 20739 BY CAPT. [illegible] 3rd Ord. SEPT 26, 1947



LIST OF SPECIFICATIONS

LINE NO.	LIST OF SPECIFICATIONS	SPEC. NUMBER *	REQUIRED BY
1			
2	ALUMINUM-ALLOY(ALUMINUM-COPPER-MAGNESIUM-MANGANESE), BARS, ETC.	QQ-A-351	DRG. 73-2-237
3	ALUMINUM-BASE-ALLOY, DIE-CASTINGS	QQ-A-591	DRG. 73-2-237
4	ALUMINUM, PLATES AND SHEETS	QQ-A-561	DRG 73-2-237
5	AMMUNITION, EXCEPT SMALL ARMS AMMUNITION, GENERAL SPEC. FOR	50-0-1	DRG. 73-2-236
6	CEMENT, PETTMAN	JAN-C-99	DRG 73-2-238
7			
8	FUZE, POINT INITIATING, M 90A1, LOADING, ASSEMBLING AND PACKING	50-17-37	DRG. 73-2-236
9	FINISHES, PROTECTIVE, FOR IRON AND STEEL PARTS	57-0-2	DRG. 73-2-238
10	FUZE, POINT INITIATING, M 90A1 METAL PARTS FOR	50-40-16	DRG. 73-2-236
11	LACQUER, CELLULOSE NITRATE, AND THINNER (INDENTIFICATION OF, ETC)	MIL-L-10287	DRG. 73-2-236
12			
13			
14			
15	DETONATORS, LOADING, ASSEMBLING AND PACKING	50-78-7	DRG 73-2-205
16			
17	METALS; GENERAL SPECIFICATION FOR INSPECTION OF	QQ-M-151	57-136
18	ORDNANCE FINISHES (SURFACE ROUGHNESS);	URAX-6	DRG. 73-2-237
19	PAINT, VARNISH, LACQUER AND RELATED MATERIALS; ETC	TT-P-141	MIL-L-10287
20	PAPER; GENERAL SPECIFICATIONS	UU-P-31	JAN-P-157
21	PAPER; ONIONSKIN (FOR USE IN AMMUNITION)	JAN-P-157	DRG. 73-2-238
22			
23			
24	SURFACE ROUGHNESS, WAVINESS AND LAY	MIL-STD-10	DRG. 73-2-237
25			
26	STEEL, CARBON, BARS (GENERAL PURPOSE)	QQ-S-633	DRG. 73-2-238
27	STEEL, CARBON AND ALLOY, SHEETS AND STRIPS	57-136	DRG. 73-2-238
28	WIRE, STEEL (CARBON); SPRING, MUSIC	QQ-W-470	DRG. 73-2-237
29	BRASS, COMMERCIAL: BARS, PLATES, RODS, SHAPES, SHEETS AND STRIPS	QQ-B-611	DRG 73-2-238
30			
31	ZINC-BASE-ALLOY, DIE-CASTINGS	QQ-Z-363	DRG. 73-2-237
32			

THE SPECIFICATION NUMBERS SHOWN ARE BASIC NUMBERS ONLY. WHEN A SPECIFICATION IS REVISED A LETTER IS AFFIXED TO ITS BASIC NUMBER. SPECIFICATIONS REFERRED TO IN THESE SPECIFICATIONS AND NOT LISTED HEREON, SHALL NOT APPLY.

LIST OF DRAWINGS

LINE NO.	LIST OF DRAWINGS	DRAWING NUMBER
1	ASSEMBLY	73-2-236
2	DETAILS	73-2-238
3	DETAILS	73-2-237
4	DETONATOR, M30A1, ASSEMBLY	73-2-205
5	STD FOR DIMENSIONING & TOLERANCING	30-1-7
6	PACKING BOX	76-1-883
7	PACKING CONTAINER	76-1-1156
8	PRIMER PERCUSSION, M56	74-2-84
9	AUXILIARY DETONATOR, M43	73-2-324
10		
11		

(P) PROTECTIVE FINISHES (SPEC 57-0-2)
(Pa) TYPE I, CLASS T OR R.
(Pb) TYPE I, CLASS RS.
(Pc) NICKEL PLATE OR SUBJECT TO CHROMATE TREATMENT (TO MEET 24 HOUR SALT SPRAY TEST WITHOUT DISINTEGRATION OF PLATING OR FORMATION OF WHITE SALTS).

NOTICE: THIS DRAWING SHALL NOT BE USED OR REPRODUCED EITHER WHOLLY OR IN PART EXCEPT FOR THE SERVICE OF THE U.S. GOVT. WITHOUT THE PERMISSION OF THE OWNER.

STANDARDIZED BY OCM 27443 APRIL 26, 1945

FUZE, P.I., M90A1
ASSEMBLY

OCT. 24, 1944	CLASS	DIVISION	DRAWING	FILE
REVISIONS	73	2	236	

SYMBOL

1	2-6-45
2	8-6-45
3	9-26-47
4	4-18-50
5	7-11-50

D'FTSMAN	TRACER	ENGINEER
RHD	RH	
CHECKER	CHECKER	CHIEF D'FTSMAN
A.E.R.	JHS	M.T.

DRG. PERTAINS TO

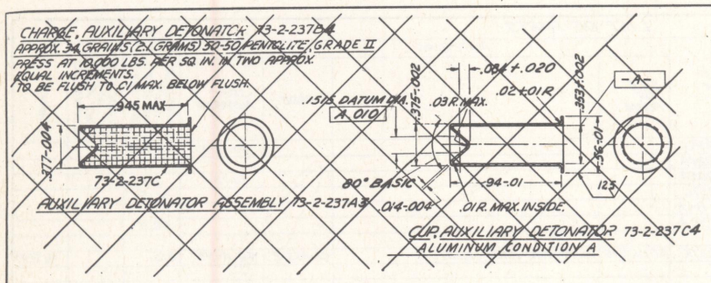
SUBMITTED:- Milburg Crage COL., ORD. DEPT. U.S.A.

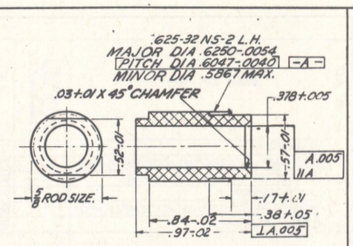
EXAMINED:- W. H. Hollis COL., ORD. DEPT. U.S.A.

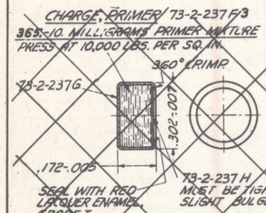
APPROVED BY ORDER OF THE CHIEF OF ORDNANCE:- J. C. Burke COL., ORD. DEPT. U.S.A.

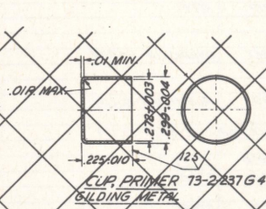
D

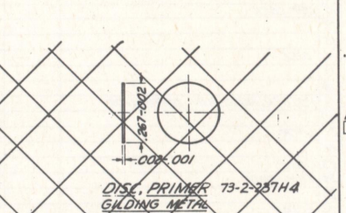
ORDNANCE DEPT., U.S.A.

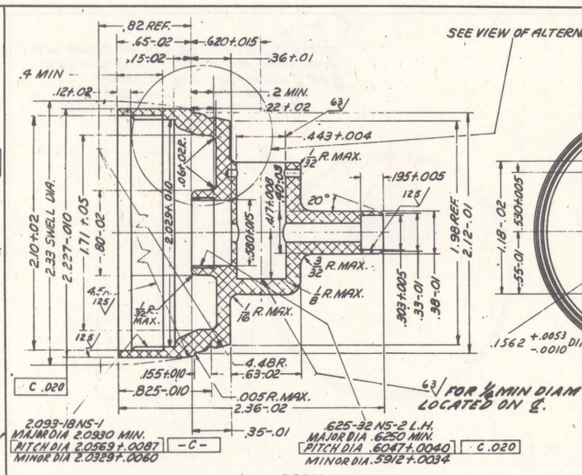


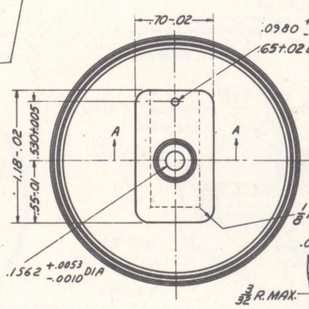


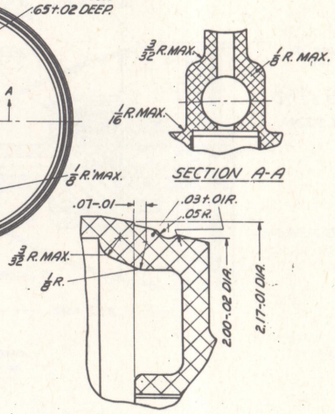






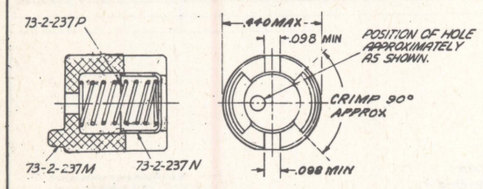


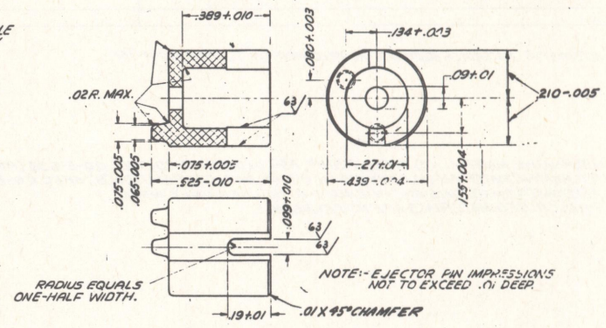


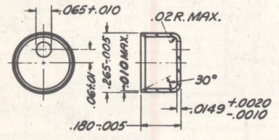


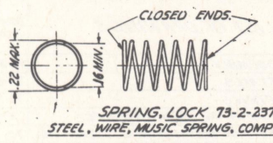
NOTE-

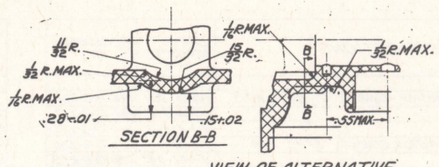
(a)- MATERIALS AND MANUFACTURING PROCESS USED MUST BE OF SUCH QUALITY AS TO INSURE THAT LIP AT TOP OF BODY CAN BE SATISFACTORILY CRIMPED WITHOUT UNDUE DIFFICULTY











VIEW OF ALTERNATIVE CONSTRUCTION

REQUIREMENTS

A- SOLID HEIGHT NOT OVER .16 INCH.
B- SEASON THOROUGHLY AFTER WINDING.
C- TREAT, TO REMOVE EMBRITTLEMENT, WITHIN 24 HOURS AFTER PLATING.
D- MUST MEET ARMING LIMITS OF ROTOR AS SPECIFIED UNDER ASSEMBLY (OCCASIONAL CHECK WILL BE MADE AFTER COMPRESSION FOR AT LEAST 24 HOURS, AT THE ASSEMBLED HEIGHT).

ADVISORY DATA (MAY BE VARIED TO MEET REQUIREMENTS)

A- DIAMETER OF WIRE = .02 INCH.
B- TOTAL NUMBER OF COILS = 7.
C- NUMBER OF ACTIVE COILS = 5.
D- APPROX. FREE HEIGHT TO MEET LOAD AT .32 INCH. SUGGESTED TRIAL FREE HEIGHT = .48 INCH.
E- LOAD AT .32 INCH = [redacted]
F- LOAD APPLIES AFTER SEASONING, PLATING AND TREATMENT TO REMOVE EMBRITTLEMENT.
G- SEASON BY HEATING TO 500°F. FOR 30 MINUTES.
H- TO REMOVE EMBRITTLEMENT, HEAT TO 300°F. FOR AT LEAST 30 MINUTES AS SOON AFTER PLATING AS PRACTICABLE.

[redacted]

CLASSIFICATION CHANGED TO UNCLASSIFIED BY AUTHORITY OF OCM 29730 BY CAPT. Theodore Whitehead Ord Dept. SEPT 26, 1947

[redacted]

FOR PROTECTIVE FINISHES AND ALTERNATIVE MATERIALS, SEE DRG. 73-2-236

SCALE, INCHES, 4, 2

NOTICE:- THIS DRAWING SHALL NOT BE USED OR REPRODUCED EITHER WHOLLY OR IN PART, EXCEPT WHEN AUTHORIZED IN CONNECTION WITH UNITED STATES GOVERNMENT PROCUREMENT.

STANDARDIZED BY OCM 27443 APRIL 26, 1945

FUZE, P.I., M90 A1
DETAILS

OCT. 24, 1944

CLASS	DIVISION	DRAWING	FILE
73	2	237	

SYMBOL

REVISIONS		
1	2-6-45	
2	6-6-45	
3	9-26-47	#
4	4-18-50	
5	7-11-50	

DRG. PERTAINS TO
73-2-236

D'TSMAN	TRACER	ENGINEER
RMD	CJF	W.
CHECKER	CHECKER	CHIEF D'TSMAN
A.E.R.	JHDK C.C.	M.T.

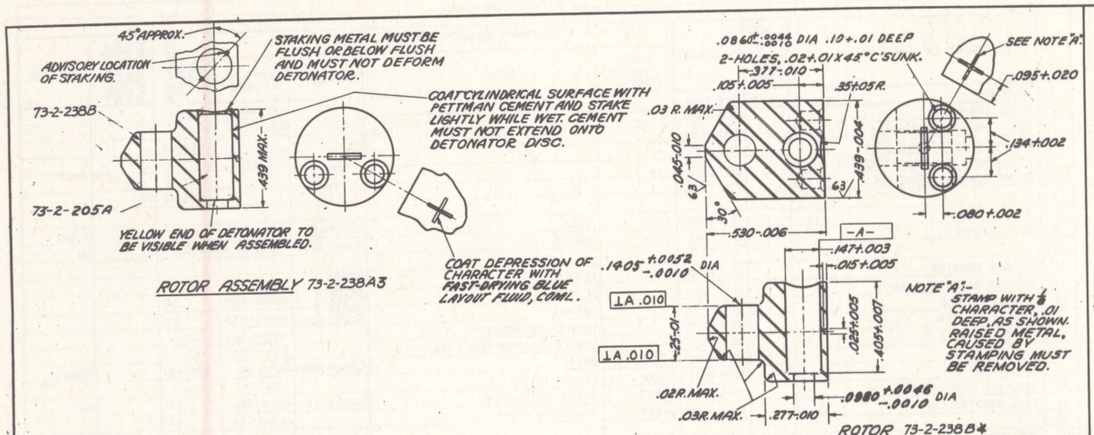
SUBMITTED:- William Lange, COL., ORD. DEPT., U.S.A.

EXAMINED:- W. M. Holler, COL., ORD. DEPT., U.S.A.

APPROVED BY ORDER OF THE CHIEF OF ORDNANCE:- J. G. Rice, COL., ORD. DEPT., U.S.A.

D

ORDNANCE DEPT., U.S.A.

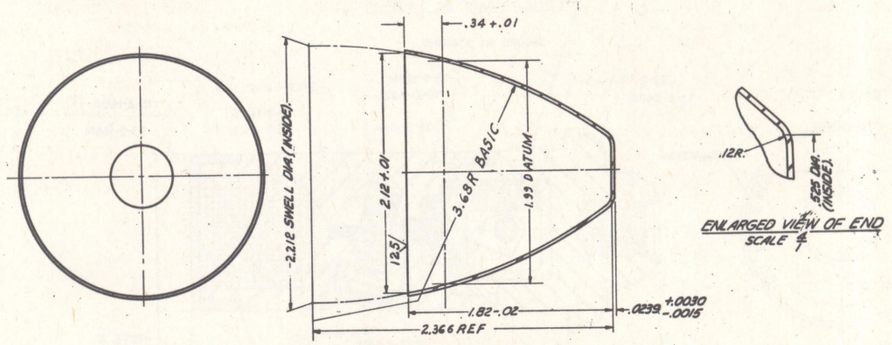


ROTOR ASSEMBLY 73-2-238A3

ROTOR 73-2-238B*

STEEL, FS B1113, AS-COLD-FINISHED
125/ ALL OVER EXCEPT AS NOTED

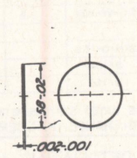
NOTE:- MAY BE FORMED BY FORGING OR HEADING.



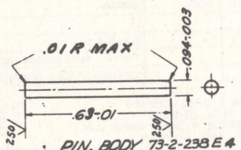
ENLARGED VIEW OF END
SCALE 4/1

OGIVE 73-2-238C*

STEEL, WD 1010 TO 1030, COLD-ROLLED, TEMPER NO. 5 (DEAD SOFT), FINISH NO. 1 (DULL)
MAXIMUM HARDNESS ROCKWELL 30-T 50 AFTER FORMING.



DISC 73-2-238D
ONIONSKIN PAPER
DIAMETER DIMENSION CONTROLS TOOL MANUFACTURE.



PIN, BODY 73-2-238E4
STEEL, FS 1010 TO 1030, AS-COLD-FINISHED

NOTICE:- THIS DRAWING SHALL NOT BE USED OR REPRODUCED EITHER WHOLLY OR IN PART, EXCEPT WHEN AUTHORIZED IN CONNECTION WITH UNITED STATES GOVERNMENT PROCUREMENT.

CLASSIFICATION CHANGED TO UNCLASSIFIED BY AUTHORITY OF OCM 29730 CV
CAPT. Thomas W. Hewitt 2nd Sqd
SEPT 26, 1947

[redacted]

FOR PROTECTIVE FINISHES AND ALTERNATIVE MATERIALS, SEE DRG. 73-2-236

SCALE, INCHES, 4/1 & 2/1

* STANDARDIZED BY OCM 27448 APRIL 26, 1946

FUZE, P.I., M90*
DETAILS

OCT. 24, 1944

REVISIONS	
1	2-6-45
2	8-6-45
3	8-26-47
4	4-18-50
5	7-11-50

DRG. PERTAINS TO
73-2-236

CLASS	DIVISION	DRAWING	FILE
73	2	238	

SYMBOL

DFTSMAN	TRACER	CHECKER
RHD	CJF	20

CHECKER	CHECKER	SUP'V DFTSMAN
A.E.R.		M.T.

SUBMITTED:- Milton Unger, COL., ORD. DEPT., U.S.A.

EXAMINED:- W. W. Holler, 1 C.F. COL., ORD. DEPT., U.S.A.

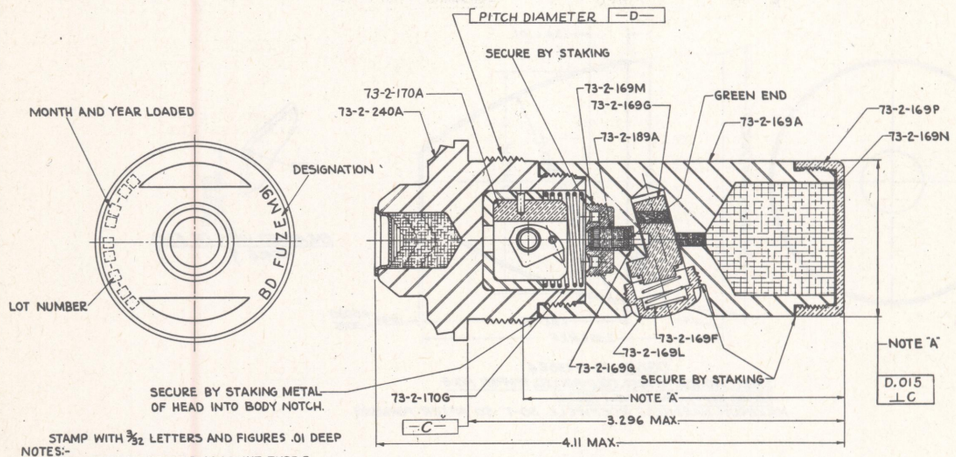
APPROVED BY ORDER OF THE CHIEF OF ORDNANCE:- A. Co. Luke, COL., ORD. DEPT., U.S.A.

D

ORDNANCE DEPT., U.S.A.

ORDNANCE DRAWING - SIZE D (ALTERNATIVE)

CL & DIV 73-2-239 D



ASSEMBLY 73-2-239A2

SLIDER MUST NOT ARM AT 2400 R.P.M.
SLIDER MUST ARM AT 3600 R.P.M.

STAMP WITH 3/32 LETTERS AND FIGURES .01 DEEP

NOTES:-
A-COAT WITH ACID PROOF BLACK PAINT, TYPE I.
B-DIMENSIONS GIVEN ON PART NUMBER 73-2-239A APPLY PRIOR TO COATING WITH BLACK PAINT.

LIST OF PARTS

LINE NO.	NAME OF PART	NUMBER REQD. PER COMPONENT	PIECEMARK	MATERIAL: SIZE OR FORM	MATERIAL: KIND	MATERIAL: GRADE	MATERIAL: SPEC. NUMBER	APPROX. UNIT WEIGHT (GRAINS)	APPROX GROSS WT. OF RAW STOCK PER 1000 ASSEMBLIES	REMARKS
1	ASSEMBLY		73-2-239A				AXS-1518	1.38 LBS.		
2	HEAD ASSEMBLY		73-2-240A				AXS-1693	3607.		
3	BODY LOADING ASSEMBLY		73-2-169A					4652.34		
4	DETONATOR ASSEMBLY M22	1	73-2-189A				PXS-1048	7.3		
5	PERCUSSION PLUNGER ASSEMBLY		73-2-170A					677.		
6	SLIDER LOADING ASSEMBLY		73-2-169G					134.06		
7										
8	BODY	1	73-2-169D	BAR	STEEL	WDX1314	57-107	4341.		(n)(pa)
9	BODY, PLUNGER	1	73-2-170B	ROD	BRASS	D, HALF HARD	QQ-B-611	360.		(c)
10										
11	CHARGE, BOOSTER	1	73-2-169C		TETRYL	GRADE 1 CLASS "a"	JAN-T-339	310.		
12	CHARGE, BOOSTER LEAD	1	73-2-169B		TETRYL	GRADE 1 CLASS "a"	JAN-T-339	1.34		
13	CHARGE, SLIDER	1	73-2-169H		TETRYL	GRADE 1 CLASS "a"	JAN-T-339	1.34		
14	CHARGE, IGNITER	1	73-2-240B		IGNITER COMPOSITION, "K"		AXS-1693	20.		
15	CHARGE, TRACER	1	73-2-240C		TRACER COMPOSITION, "M3"		AXS-1693	49.		
16	CUP, BOOSTER	1	73-2-169P	STRIP	BRASS	C, HALF HARD	QQ-B-611	356.48		(a)(b)(h)
17	CUP, CLOSING	1	75-14-379G	SHEET	GILDING METAL		57-171-2	5.		
18	CUSHION, DETONATOR	1	73-2-169Q	SHEET	CORK- COMPOSITION	CLASS 3 OR 4	HH-C-576	.04		(m)
19	DISC, BOOSTER CUP	1	73-2-169N	SHEET	ONIONSKIN PAPER		JAN-P-155	.46		
20										
21	FULCRUM, FIRING PIN	1	73-2-170K	BAR	STEEL	WDX1314 OR WD1035	57-107	6.		(pa)(n)
22	HEAD	1	73-2-240D	BAR	STEEL	WDX1335	57-107	3533.		(pa)
23	HOLDER, DETONATOR	1	73-2-169M	ROD	BRASS	D, HALF-HARD	QQ-B-611	74.07		(b)
24	HOUSING, PLUNGER	1	73-2-170M	BAR	STEEL	WDX1314	57-107	255.		(h)(pa)
25										
26	PIN	1	73-2-170L	ROD	BRASS	D, HALF-HARD	QQ-B-611	1.7		(g)(c)
27	PIN, FIRING	1	73-2-170D	STRIP	BRASS	C, HALF-HARD	QQ-B-611	29.6		(d)(e)
28	PIN, SAFETY	2	73-2-170F	ROD	BRASS	D, HALF-HARD	QQ-B-611	12.4		(f)(e)
29										
30	SCREW, RETAINING	1	73-2-169L	ROD	BRASS	D, HALF-HARD	QQ-B-611	158.18		(b)
31	SLIDER	1	73-2-169K	ROD	BRASS	B, HALF-HARD	QQ-B-611	132.72		
32	SPRING, SLIDER	1	73-2-169F	WIRE	STEEL, MUSIC SPRING	COMP. A	QQ-W-470	3.09		(pa)(pb)
33	SPRING, RESTRAINING	1	73-2-170G	WIRE	STEEL, MUSIC SPRING	COMP. A	QQ-W-470	20.		(pa)(pb)
34	SPRING, SAFETY PIN	2	73-2-170H	WIRE	BRASS	C	QQ-W-321	.6		(c)
35										
36					GRAPHITE	I OR II	JAN-G-155			(r)
37					PAINT, ACID-PROOF BLACK	TYPE I	3-106			
38					VARNISH, PHENOL FORMALDEHYDE RESIN		3-167			(k)

(a)-ALTERNATIVE:- ALUMINUM-BASE-ALLOY; DIE CASTINGS, CLASS 5, SPEC. AXS-679.
(b)-ALTERNATIVE:- ZINC-BASE-ALLOY; DIE CASTINGS, CLASS A, SPEC. 57-93-2
(c)-ALTERNATIVE:- PHOSPHOR BRONZE, WIRE, SPRING TEMPER, GRADE A, SPEC. QQ-W-401.
(d)-ALTERNATIVE:- COMMERCIAL BRASS, FORGING, COMPOSITION A, SPEC. QQ-B-611.
(e)-ALTERNATIVE:- COMMERCIAL BRASS, ROD OR SHAPE, COMPOSITION D OR B, HALF HARD, SPEC. QQ-B-611.
(f)-ALTERNATIVE:- STEEL, WDX1314 OR WDX1020, COLD DRAWN, SPEC. 57-107, (pa).
(g)-ALTERNATIVE:- STEEL, WDX1314 OR WD1035, COLD DRAWN, SPEC. 57-107. (pa)(pb).
(h)-ALTERNATIVE:- STEEL, WD1010 OR WD1020, SPEC. 57-136, (pa).
(k)-ALTERNATIVE:- LACQUER, CELLULOSE NITRATE, TINTED GREEN, TYPE I, SPEC. 3-158.
(m)-SPEC. HH-C-576 EXCEPT FOR THICKNESS.
(n)-ALTERNATIVE:- STEEL, WDX1315, SPEC. 57-107.
(r)-ALTERNATIVE:- BARIUM STEARATE, SPEC. PXS-1050, MAY REPLACE ALL OR PART OF GRAPHITE.

(p)-PROTECTIVE FINISH, SPEC. 57-0-2
(pa) TYPE I, CLASS RSC OR TS.
(pb) TYPE I, CLASS RS.

FOR USE IN SHELL, HEAT, 75MM., M66 AND SHELL HEAT, 105MM., M67 FOR HOWITZERS.

STANDARDIZED BY OCM 29015 DATED SEPTEMBER 13, 1945.
SUPERSEDES 73-2-239 WITH CHANGE OCTOBER 1, 1945.

LIST OF SPECIFICATIONS

LINE NO.		SPECIFICATION NUMBER *	REQUIRED BY
1	AMMUNITION, EXCEPT SMALL ARMS AMMUNITION, GENERAL SPEC. FOR	50-0-1	DRG. 73-2-239
2	ALUMINUM-BASE-ALLOY; DIE CASTING	AXS-679	DRG. 73-2-169
3			
4	BARIUM STEARATE	PXS-1050	DRG. 73-2-239
5	BRASS, COMMERCIAL; BARS, PLATES, RODS, SHAPES, ETC.	QQ-B-611	DRG. 73-2-239
6	CORK, COMPOSITION; GASKET AND SHEET	HH-C-576	DRG. 73-2-169
7	DETONATOR, M22	PXS-1048	DRG. 73-2-289
8	FINISHES, PROTECTIVE, FOR IRON AND STEEL PARTS	57-0-2	DRG. 73-2-239
9	FUZE, BASE DETONATING, M91, LOADING, ASSEMBLING AND PACKING	AXS-1518	DRG. 73-2-239
10	FUZE, BASE DETONATING, M91, PARTS FOR	AXS-1517	DRG. 73-2-239
11			
12	GRAPHITE	JAN-G-155	DRG. 73-2-169
13	LACQUER, CELLULOSE NITRATE AND THINNER, CLEAR AND PIGMENTED	3-158	DRG. 73-2-170
14	METALS; GENERAL SPECIFICATION FOR INSPECTION OF	QQ-M-151	QQ-B-611
15	METAL, GILDING (95/5 BRASS) SHEETS AND STRIPS	57-171-2	DRG. 75-14-379
16	PAINT, ACID-PROOF BLACK, FOR AMMUNITION	3-106	DRG. 73-2-239
17	PAPER, ONIONSKIN	JAN-P-157	DRG. 73-2-169
18	PAPER, GENERAL SPECIFICATIONS	UU-P-31	JAN-P-157
19			
20	STEEL, CARBON AND ALLOY; BARS	57-107	DRG. 73-2-169
21	STEEL, CARBON AND ALLOY; SHEETS AND STRIPS	57-136	DRG. 73-2-170
22			
23	TETRYL	JAN-T-339	DRG. 73-2-169
24	TRACER COMPOSITION, (RED) M3, & IGNITER COMPOSITION K	AXS-1693	DRG. 73-2-240
25	VARNISH, PHENOL FORMALDEHYDE RESIN	3-167	DRG. 73-2-170
26			
27	WIRE; BRASS	QQ-W-321	DRG. 73-2-170
28	WIRE; PHOSPHOR BRONZE, SPRING	QQ-W-401	DRG. 73-2-170
29	WIRE, STEEL (CARBON)) SPRING, MUSIC	QQ-W-470	DRG. 73-2-169
30			
31			
32	ZINC-BASE-ALLOY; DIE CASTING	57-93-2	DRG. 73-2-169
33			
34			
35			

* THE SPECIFICATION NUMBERS SHOWN ARE BASIC NUMBERS ONLY. WHEN A SPECIFICATION IS REVISED A LETTER IS AFFIXED TO ITS BASIC NUMBER. SPECIFICATIONS REFERRED TO IN THESE SPECIFICATIONS AND NOT LISTED HEREON, SHALL NOT APPLY.

LIST OF DRAWINGS

LINE NO.		DRAWING NUMBER
1	ASSEMBLY	73-2-239
2	DETAILS	73-2-240
3	DETAILS	73-2-169
4	DETAILS	73-2-170
5	DETONATOR, M22, LOADING ASSEMBLY	73-2-189
6	LOADING ACCESSORIES, DETAILS	75-14-379
7	FIBER CONTAINER	76-1-1096
8	PACKING, AND MARKING, OF CONTAINER	76-1-1097
9	STANDARD FOR DIMENSIONING AND TOLERANCING	30-1-7

0 1 2 3 4 5 IN.

FUZE, BASE DETONATING, M91 ASSEMBLY

HEAT TREATMENT & PROTECTIVE FINISH

CLASS	DIVISION	DRAWING
73	2	239

DRAWING PERTAINS TO

PHYSICAL PROPERTIES

ORIGINAL DATE OF DRAWING FEBRUARY 16, 1945

REVISIONS

	DATE	MAS. REV. NO.	BY	CHK
# 1	10-1-45	D-8128		
2	5-23-49			

WEIGHT — DO NOT DO — APPLY PART NO. (As Specified)

SCALE — DRAFTSMAN M.S. — TRACED —

TOLERANCES OR DIMENSIONS (Unless Otherwise Specified) — DESIGNER H.R. — CHECKED B.R.

ENGINEER — APPROVED

SUBMITTED

EXAMINED

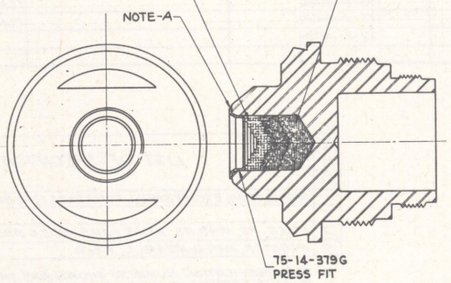
APPROVED

SIZE D

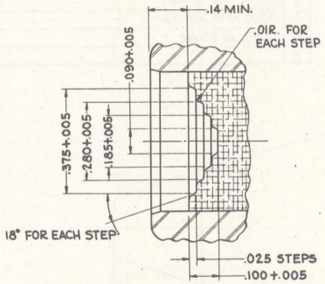
ORDNANCE DEPT U.S. ARMY

CHARGE, IGNITER 73-2-240B
APPROX. 20 GRAINS (1.3 GRAMS) IGNITER COMPOSITION
ADVISORY:- ONE SOLID PELLET, DIAM.=.49 , LENGTH=.18

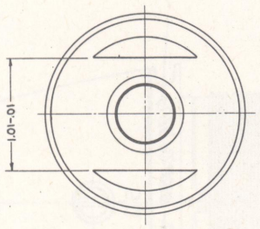
CHARGE, TRACER 73-2-240C1
APPROX. 49 GRAINS (3.2 GRAMS) TRACER COMPOSITION
ADVISORY:- TWO SOLID PELLETS, DIAM.=.49, LENGTH=.25



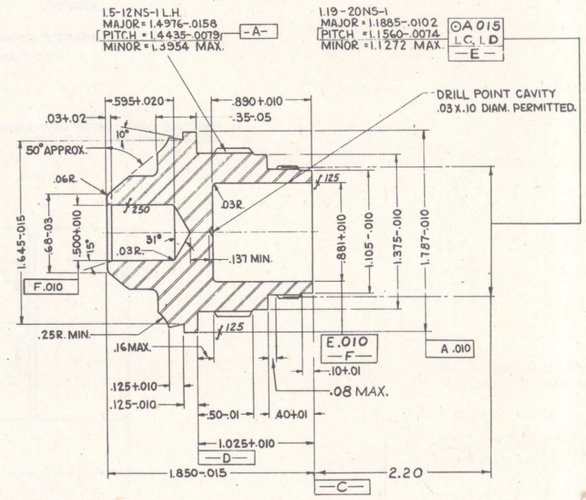
HEAD ASSEMBLY 73-2-240A2
2/1



ENLARGED SECTION SHOWING FORMATION OF CAVITY
DIMENSIONS CONTROL TOOL MANUFACTURE
5/1



ADVISORY TRACER LOADING INSTRUCTIONS
PRESS SEPARATELY TRACER CHARGE AND IGNITER CHARGE AT 110,000 LBS. PER SQ. IN., ALLOWING LOAD TO DWELL FROM 4 TO 6 SECONDS. PUNCH USED FOR PRESSING TRACER AND IGNITER CHARGES TO BE FORMED AS SHOWN IN ENLARGED SECTION.



HEAD 73-2-240D2
STEEL, WDX1335, COLD DRAWN
FINISH f=250 EXCEPT AS NOTED
4/1

MIN. PHYSICAL PROPERTIES

TS...90,000	EL.....15%
Y.P....70,000	RED...35%

NOTES:
A- AFTER ASSEMBLY COAT JOINT WITH ACID-PROOF BLACK PAINT, TYPE II.
B- TO SEAT CLOSING CUP IN TRACER CAVITY USE EXPANSION PUNCH, PX-13-774, AT A LOAD OF APPROXIMATELY 3000 LBS.

REMOVE ALL BURRS

#STANDARDIZED BY OCM 29015 DATED SEPTEMBER 13, 1945
SUPERSEDES 73-2-240 WITH CHANGE OCTOBER 1, 1945

FUZE, BASE DETONATING, M91 DETAILS

HEAT TREATMENT & PROTECTIVE FINISH

PHYSICAL PROPERTIES

ORIGINAL DATE OF DRAWING FEBRUARY 16, 1945

REVISIONS

# 1	10-1-45	D-8128
2	5-23-49	

CLASS	DIVISION	DRAWING
73	2	240

DRAWING PERTAINS TO
73-2-239

WEIGHT — TO MAT. DO — APPLY PART NO. (As Specified)

SCALE —

TOLERANCES ON DIMENSIONS (Unless Otherwise specified)

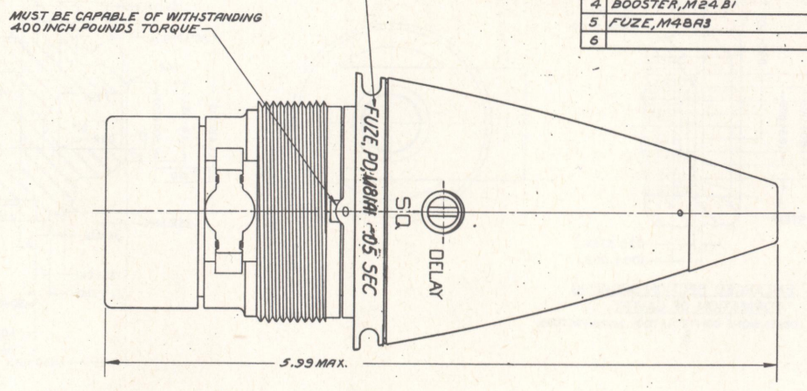
J.D.M.
H.R. B.R.
SUBMITTED G.M. McCammond
EXAMINED S.C. Stanford
APPROVED A. Adelman

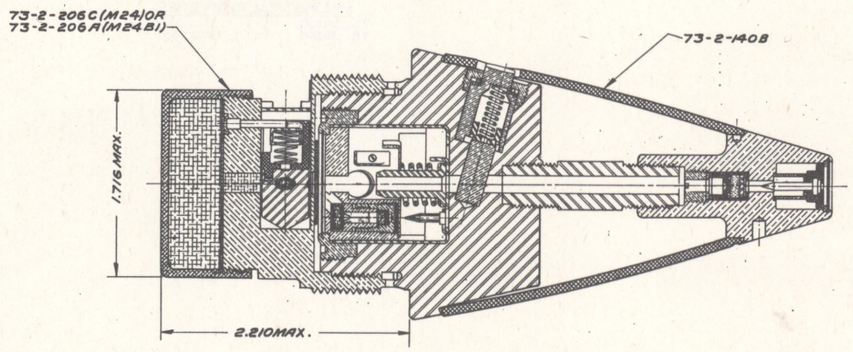
D

ORDNANCE DEPT U.S. ARMY

LOADER TO STAMP AS SHOWN WITH ⅛ LETTERS AND FIGURES ¼ DEEP ON ONE SIDE DIRECTLY OPPOSITE STAMP LOT NUMBER (INCLUDING INITIALS OR SYMBOL OF LOADER) AND DATE (MONTH AND YEAR) LOADED. STAMPINGS TO BE CENTERED APPROXIMATELY 90° FROM WRENCH SLOTS.

SAMPLE STAMPING :- □□-□-□□ (LOT NUMBER) □□-□□ (MONTH & YEAR LOADED)





ASSEMBLY 73-2-251A2

LIST OF PARTS

LINE NUMBER	NAME OF PART	NUMBER REQUIRED PER COMPONENT	PIECEMARK	MATERIAL: SIZE OR FORM	MATERIAL: KIND	MATERIAL: GRADE	MATERIAL: SPECIFICATION NUMBER	APPROXIMATE UNIT WEIGHT (POUNDS)	APPROX. GROSS WT. OF RAW STOCK PER 100 ASSEMBLIES	REMARKS
1	ASSEMBLY		73-2-251A				50-17-15	2.11		
2										
3	BOOSTER, M24		73-2-206C			CLASS A	50-16-9	.70		
4	BOOSTER, M24B1		73-2-206A			CLASS B	50-16-9	.70		
5	FUZE, M48A3		73-2-140B				50-17-15	1.41		
6										

LIST OF SPECIFICATIONS

LINE NO.		SPECIFICATION NUMBER *	REQUIRED BY
1	AMMUNITION, EXCEPT SMALL ARMS AMM, GENERAL SPEC. FOR	50-0-1	DRG. 73-2-251
2			
3	FUZE, PD, M48 A3, M51A5, M51A5 MOD 3, & M8IN L. A. P.	50-17-15	DRG. 73-2-251
4	BOOSTER, M24 & M24B1, L, A & P	50-16-9	DRG. 73-2-251

* THE SPECIFICATION NUMBERS SHOWN ARE BASIC NUMBERS ONLY. WHEN A SPECIFICATION IS REVISED A LETTER IS AFFIXED TO ITS BASIC NUMBER. SPECIFICATIONS REFERRED TO IN THESE SPECIFICATIONS AND NOT LISTED HEREON, SHALL NOT APPLY.

LIST OF DRAWINGS

LINE NO.		DRAWING NUMBER
1	FUZE, PD, M81A1 ASSEMBLY	73-2-251
2	BOOSTER, M24 & M24B1 ASSEMBLY	73-2-206
3	FUZE, PD, M48A3 ASSEMBLY	73-2-140
4	CONTAINER, METAL	76-1-824
5	PACKING & MARKING OF CONTAINER	76-1-825
6	PACKING & MARKING OF BOX	20-4-512
7	PACKING BOX	76-16-427
8		
9		
10		

FUZE, POINT DETONATING, M81A1 ASSEMBLY

AUGUST 15, 1945	CLASS	DIVISION	DRAWING	FILE
REVISIONS	73	2	251	
1 8-2-46				
2 10-18-49				

TOLERANCE ON DIMENSIONS NOT OTHERWISE SPECIFIED
DECIMAL ±
FRACTIONAL ±
ANGULAR ±

D'FTSMAN	TRACER	ORD. ENGINEER
W.R.T.	W.R.T.	[illegible]
CHECKER		HEAD ENGINEER
W.R.T.		[illegible]

DRG. PERTAINS TO

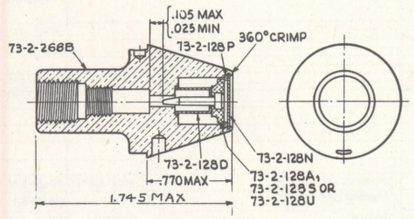
SUBMITTED: [signature] LT. COL., ORD. DEPT., U.S.A.

EXAMINED: [signature] ORD. DEPT., U.S.A.

APPROVED BY ORDER OF THE CHIEF OF ORDNANCE: C. S. Reid by a.a. COL., ORD. DEPT., U.S.A.

D

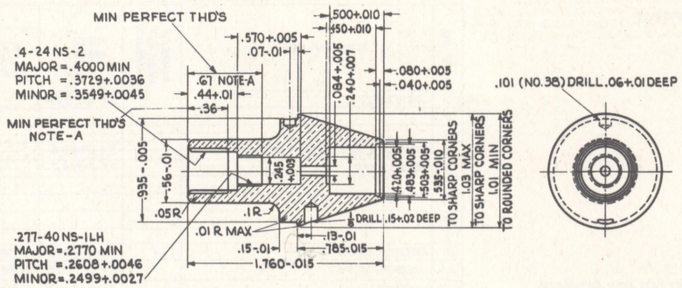
ORDNANCE DEPT., U.S.A.



HEAD, METAL PARTS ASSEMBLY 73-2-268A

2/1

(FORMERLY 73-2-143C)



HEAD 73-2-268B

COMMERCIAL BRASS, ROD, COMPOSITION B, HALF HARD

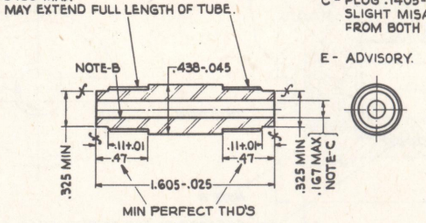
FINISH $\sqrt{}$

2/1

(FORMERLY 73-2-143D)

.4-24 NS-2
MAJOR = .4000-.0100, FOR ROLLED THREAD ONLY
MAJOR = .4000-.0068
PITCH = .3729-.0036
MINOR = .3489 MAX
THREADS MAY EXTEND FULL LENGTH OF TUBE.

NOTES:
A - DEPTH OF MIN PERFECT THREADS MAY BE REDUCED BY ± PITCH, IF FORMED WITH TAP HAVING LEAD OF ONE PITCH OR GREATER.
B - PLATING OF THIS SURFACE OPTIONAL.
C - PLUG .1405-.0005 DIA MUST PASS THRU FLASH HOLE. SLIGHT MISALIGNMENT PERMITTED WHEN DRILLED FROM BOTH ENDS.
E - ADVISORY.



TUBE, FLASH 73-2-268C

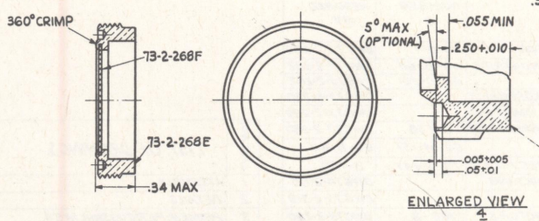
STEEL, WDX 1335

2/1

(FORMERLY 73-2-200F)

MIN PHYSICAL PROPERTIES

TS	90,000	EL	10%
YP	75,000	RED	35%

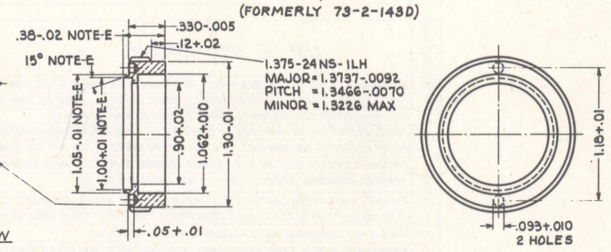


BOTTOM CLOSING SCREW ASSEMBLY 73-2-268D

ASSEMBLY MUST WITHSTAND 5 IN. VACUUM OR 2.5 LBS PSI AIR PRESSURE WITHOUT LEAKAGE.

2/1

(FORMERLY 73-2-141P)



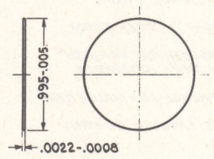
SCREW, BOTTOM CLOSING 73-2-268E

COMMERCIAL BRASS, ROD, COMPOSITION B, HALF HARD

FINISH $\sqrt{}$

2/1

(FORMERLY 73-2-141R)



DISC, BOTTOM CLOSING SCREW 73-2-268F

GILDING METAL

DIAMETER DIMENSION CONTROLS TOOL MANUFACTURE

2/1

DEAD SOFT ANNEAL (E)
(FORMERLY 73-2-141Q)

REMOVE ALL BURRS

FOR ALTERNATIVE MATERIALS AND PROTECTIVE FINISHES, SEE LIST OF PARTS WITH 73-2-141, 73-2-143 AND 73-2-200.

SUPERSEDES 73-2-141, 73-2-143 & 73-2-200 WITH CHANGE AUGUST 15, 1945

FUZE, PD, M48A3 ET AL DETAILS

AUGUST 15, 1945	CLASS	DIVISION	DRAWING	FILE
REVISIONS	73	2	268	
1 10-18-49				

TOLERANCE ON DIMENSIONS NOT OTHERWISE SPECIFIED
DECIMALS ±
FRACTIONAL ±
ANGULAR ±

D'FTSMAN	TRACER	ORD. ENGINEER
DCS	DCS	
CHECKER		HEAD ENGINEER
JRT		

SUBMITTED:
Lt. Col., ORD. DEPT., U.S.A.

EXAMINED:
ORD. DEPT., U.S.A.

APPROVED BY ORDER OF THE CHIEF OF ORDNANCE:
C. S. Reed 4th
COL., ORD. DEPT., U.S.A.

DRG. PERTAINS TO

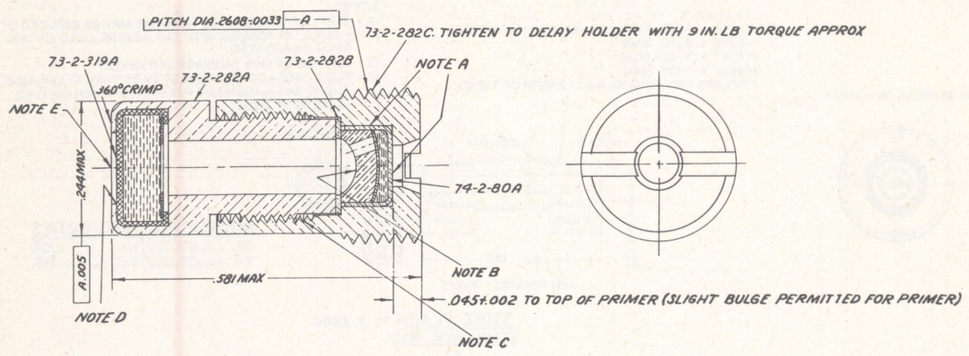
73-2-163	FUZE, PD, M61A5 MOD 3
73-2-140	FUZE, PD, M48A3

D

ORDNANCE DEPT., U.S.A.

ORDNANCE DRAWING - SIZE [illegible]

CL & DIV D



ASSEMBLY 73-2-280A

NOTES:-

A:- APPLY COATING OF ALUMINUM-CONTAINING PHENOL-FORMALDEHYDE VARNISH TO CYLINDRICAL SURFACE OF PRIMER POCKET AND BEFORE VARNISH DRIES PRESS PRIMER IN PLACE. CENTER OF PRIMER MUST BE FREE FROM VARNISH FOR 1/16 INCH MIN.

B:- CONCAVE SURFACE AND FLASH HOLE OF PRIMER ANVIL MUST BE FREE FROM VARNISH.

C:- APPLY COATING OF ALUMINUM-CONTAINING PHENOL-FORMALDEHYDE VARNISH TO THREADS OF DELAY HOLDER AND BEFORE VARNISH DRIES ASSEMBLE PRIMER HOLDER TIGHTLY TO DELAY HOLDER.

D:- APPLY ANNULAR COATING OF ALUMINUM-CONTAINING PHENOL-FORMALDEHYDE VARNISH, AND CRIMP BEFORE VARNISH DRIES.

E:- COAT EXPOSED SURFACE OF RELAY CUP WITH WHITE LACQUER. COATING OF END OF DELAY HOLDER PERMITTED.

LIST OF PARTS

LINE NO.	NAME OF PART	NUMBER REQ'D PER COMPONENT	PIECE MARK	MATERIAL: SIZE OR FORM	MATERIAL: KIND	MATERIAL: GRADE	MATERIAL: SPEC NUMBER	APPROXIMATE UNIT WEIGHT (GRAINS)	APPROX GROSS WT OF RAW STOCK PER 1000 ASSEMBLIES	REMARKS
1	ASSEMBLY		73-2-280A				PXS-1306	38.31		
2										
3										
4	PRIMER, PERCUSSION, M54		74-2-80A				PXS-1305	2.44		
5	RELAY, M7		73-2-319A				PXS-1237	2.30		
6										
7										
8										
9										
10	HOLDER, DELAY	1	73-2-282A	ROD	COMMERCIAL BRASS	B, HALF-HARD	QQ-B-611	16.3		
11	HOLDER, PRIMER	1	73-2-282C	ROD	COMMERCIAL BRASS	B, HALF-HARD	QQ-B-611	16.95		
12	WASHER	1	73-2-282B	STRIP	COPPER	SOFT	QQ-C-501	.32		
13										
14					LACQUER, WHITE	CLASS B	3-158			
15					VARNISH, PHENOL-FORMALDEHYDE	AL-CONTAINING				
16										

LINE NO.	LIST OF SPECIFICATIONS	SPEC NUMBER *	REQUIRED BY
1	AMMUNITION, EXCEPT SMALL ARMS AMMUNITION, GENERAL SPEC FOR	50-0-1	DWG 73-2-280
2	BRASS, COMMERCIAL; BARS, PLATES, RODS, SHAPES, SHEETS AND STRIPS	QQ-B-611	DWG 73-2-282
3	COPPER; BARS, PLATES, RODS, SHAPES, SHEETS AND STRIPS	QQ-C-501	DWG 73-2-282
4	DELAY ELEMENT, M1, NON-DELAY & DELAY ELEMENT, M2. LOAD, ASSEM & PACK		DWG 73-2-280
5	DELAY ELEMENT, M1, NON-DELAY & DELAY ELEMENT, M2, METAL PARTS FOR		DWG 73-2-280
6	LACQUER, CELLULOSE NITRATE, AND THINNER (CLEAR AND PIGMENTED)	3-158	DWG 73-2-280
7	METALS; GENERAL SPECIFICATION FOR INSPECTION OF	QQ-M-151	QQ-B-611
8	PAINT, VARNISH, LACQUER, AND RELATED MATL; GEN SPEC FOR, ETC	TT-P-141	3-158
9	PRIMER, PERCUSSION, M54 & LOADING, ASSEMBLING, AND PACKING		DWG 74-2-80
10	RELAYS. LOADING, ASSEMBLING, AND PACKING		DWG 73-2-319
11	STANDARD SPEC FOR MARKING SHIPMENTS BY CONTRACTORS	100-2	DWG 73-2-280
12			
13	VARNISH, PHENOL-FORMALDEHYDE, ALUMINUM-CONTAINING		DWG 73-2-280
14			
15			

* THE SPECIFICATION NUMBERS SHOWN ARE BASIC NUMBERS ONLY. WHEN A SPECIFICATION IS REVISED A LETTER IS AFFIXED TO ITS BASIC NUMBER. SPECIFICATIONS REFERRED TO IN THESE SPECIFICATIONS AND NOT LISTED HEREON, SHALL NOT APPLY.

LINE NO.	LIST OF DRAWINGS	DRAWING NUMBER
1	ASSEMBLY	73-2-280
2	DETAILS	73-2-282
3	PRIMER, PERCUSSION, M54	74-2-80
4	RELAY, M7	74-2-319
5	PACKING CARTON, INNER	76-1-1205
6	PACKING BOX & OUTER CARTON	76-1-1206
7	STANDARD FOR DIMENSIONING & TOL	30-1-7

THIS NON-DELAY ELEMENT ASSEMBLY FOR USE IN THE FOLLOWING:-
DELAY PLUNGER, M1

0 INCH

DELAY ELEMENT, M1, NON-DELAY ASSEMBLY

HEAT TREATMENT & PROTECTIVE FINISH

PHYSICAL PROPERTIES

ORIGINAL DATE OF DRAWING SEP 30, 1949.

REVISIONS

CLASS	DIVISION	DRAWING
73	2	280

DRAWING PERTAINS TO

WEIGHT

SCALE —

TOLERANCES OR DIMENSIONS (Unless Otherwise Specified)

DO NOT APPLY PART NO.
DO (As Specified)

DRAWN a.c.o. 6/7/5
TRACED MJ 5-
CHECKED [illegible] BY
SUBMITTED [signature] ORD. ENG.
EXAMINED [signature] COL.
APPROVED [signature] COL.

D

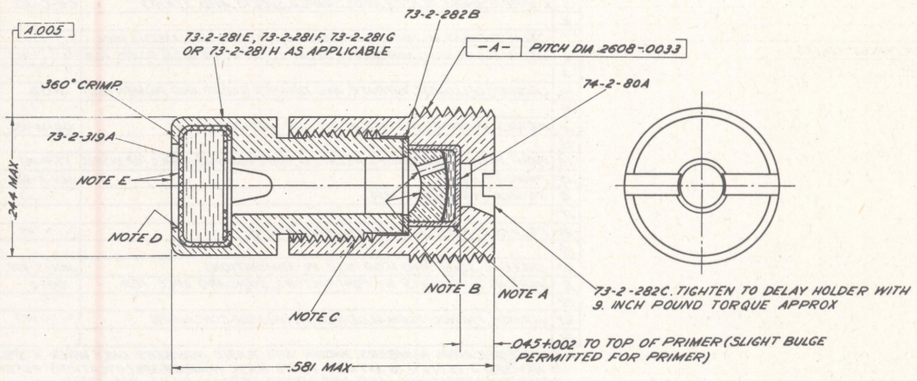
ORDNANCE DEPT. U.S. ARMY

CLASS & DIV. E

CHARGE, DELAY			
PIECEMARK	DELAY	WEIGHT MGS	WEIGHT GRAIN
73-2-281K	.025	15	.23
73-2-281L	.05	21	.32
73-2-281M	.10	31	.48
73-2-281N	.15	42	.65

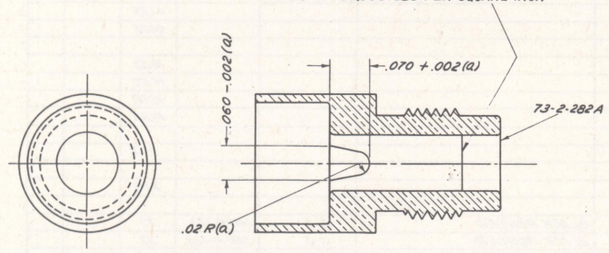
VARY QUANTITY TO GIVE REQUIRED DELAY.

LINE NO	LIST OF DRAWINGS	DRAWING NUMBER
1	ASSEMBLY	73-2-281
2	LIST OF PARTS & LIST OF SPECS	73-2-281A
3	PRIMER, PERCUSSION, M54	74-2-80
4	RELAY, M7	73-2-319
5	DETAILS	73-2-282
6	PACKING CARTON, INNER	76-1-1205
7	PACKING BOX AND OUTER CARTON	76-1-1206
8	STANDARD FOR DIMENSIONING, ETC.	30-1-7



ASSEMBLY (.025 SEC) 73-2-281A
ASSEMBLY (.05 SEC) 73-2-281B
ASSEMBLY (.10 SEC) 73-2-281C
ASSEMBLY (.15 SEC) 73-2-281D

CHARGE, DELAY 73-2-281K (SEE TABLE)
BLACK POWDER, GRADE A-5
PRESS AT 60,000 LBS PER SQUARE INCH



DELAY HOLDER ASSEMBLY (.025 SEC) 73-2-281E
DELAY HOLDER ASSEMBLY (.05 SEC) 73-2-281F
DELAY HOLDER ASSEMBLY (.10 SEC) 73-2-281G
DELAY HOLDER ASSEMBLY (.15 SEC) 73-2-281H
DIP DELAY HOLDER IN COMPOSITION OF SHELLAC SOLUTION, TYPE I, CLASS 2 AND ALLOW TO DRY BEFORE LOADING.

(a) DIMENSIONS CONTROL TOOL MANUFACTURE.

NOTES:-
A:- APPLY COATING OF ALUMINUM-CONTAINING PHENOL-FORMALDEHYDE VARNISH TO CYLINDRICAL SURFACE OF PRIMER POCKET AND BEFORE VARNISH DRIES PRESS PRIMER IN PLACE. CENTER OF PRIMER MUST BE FREE FROM VARNISH FOR 1/16 INCH MIN.
B:- CONCAVE SURFACE AND FLASH HOLE OF PRIMER ANVIL MUST BE FREE FROM VARNISH.
C:- APPLY COATING OF ALUMINUM-CONTAINING PHENOL-FORMALDEHYDE VARNISH TO THREADS OF DELAY HOLDER AND BEFORE VARNISH DRIES ASSEMBLE PRIMER HOLDER TIGHTLY TO DELAY HOLDER.
D:- APPLY ANNULAR COATING OF ALUMINUM-CONTAINING PHENOL-FORMALDEHYDE VARNISH, AND CRIMP BEFORE VARNISH DRIES.
E:- COAT EXPOSED SURFACE OF RELAY CUP WITH LACQUER, COATING OF END OF DELAY HOLDER PERMITTED. COLOR OF LACQUER WILL BE AS FOLLOWS:
YELLOW FOR .025 SEC DELAY
BLACK FOR .05 SEC DELAY
GREEN FOR .10 SEC DELAY
RED FOR .15 SEC DELAY

1. INCH

THIS DELAY ELEMENT FOR USE IN THE FOLLOWING:-
DELAY PLUNGER, M1

DELAY ELEMENT, M2 ASSEMBLY AND DETAILS

HEAT TREATMENT & PROTECTIVE FINISH	CLASS	DIVISION	DRAWING
	73	2	281

DRAWING PERTAINS TO

DRG NO.	MAJOR ITEM	DRG NO.	MAJOR ITEM

PHYSICAL PROPERTIES: YP, YS, EL 2, DPH, BH, RWCK.

ORIGINAL DATE OF DRAWING SEP 30, 1949

REVISIONS

NO	DATE	WAS (or ECO NO)	DR	CHK

WEIGHT — DO NOT APPLY PART NO DO (As Specified)
SCALE —
DRAFTSMAN N-S — CHECKER J.A.F.
TRACER P.K. — CHECKER N.S.
ENGINEER M.L. — APPROVED Geo. Clark Jr.
SUBMITTED Major, ORD. ENG. AND DEPT. U.S. ARMY
EXAMINED C.R. Dutton COL. ORD DEPT U.S. ARMY
APPROVED BY ORDER OF THE CHIEF OF ORDNANCE C.R. Dutton COL. ORD DEPT U.S. ARMY

DRG SIZE D — ORDNANCE DEPT U.S. ARMY

1040

ORDNANCE DRAWING - SIZE D (ALTERNATIVE)

CL & DIV D

LIST OF PARTS

LINE NO.	NAME OF PART	NUMBER REQD PER COMPONENT	PIECEMARK	MATERIAL: SIZE OR FORM	MATERIAL: KIND	MATERIAL: GRADE	MATERIAL: SPEC NUMBER	APPROX UNIT WEIGHT (GRAINS)	APPROX GROSS WT OF RAW STOCK PER 1000 ASSEMBLIES	REMARKS
1	ASSEMBLY (.025 SEC)		73-2-281A					41.5		
2	ASSEMBLY (.05 SEC)		73-2-281B					41.59		
3	ASSEMBLY (.10 SEC)		73-2-281C					41.75		
4	ASSEMBLY (.15 SEC)		73-2-281D					41.92		
5										
6	DELAY HOLDER ASSEMBLY (.025 SEC)		73-2-281E					16.53		
7	DELAY HOLDER ASSEMBLY (.05 SEC)		73-2-281F					16.62		
8	DELAY HOLDER ASSEMBLY (.10 SEC)		73-2-281G					16.78		
9	DELAY HOLDER ASSEMBLY (.15 SEC)		73-2-281H					16.95		
10										
11	PRIMER, PERCUSSION, M54		74-2-80A					2.44		
12										
13	RELAY, M7		73-2-319A					2.26		
14										
15	CHARGE, DELAY (.025 SEC)	1	73-2-281K		BLACK POWDER	A-5	JAN-P-223	.23		
16	CHARGE, DELAY (.05 SEC)	1	73-2-281L		BLACK POWDER	A-5	JAN-P-223	.32		
17	CHARGE, DELAY (.10 SEC)	1	73-2-281M		BLACK POWDER	A-5	JAN-P-223	.48		
18	CHARGE, DELAY (.15 SEC)	1	73-2-281N		BLACK POWDER	A-5	JAN-P-223	.65		
19										
20	HOLDER, DELAY	1	73-2-282A	ROD	COMMERCIAL BRASS	B, HALF-HARD	QQ-B-611	16.3		
21	HOLDER, PRIMER	1	73-2-282C	ROD	COMMERCIAL BRASS	B, HALF-HARD	QQ-B-611	19.95		
22										
23	WASHER	1	73-2-282B	STRIP	COPPER	SOFT	QQ-C-501	.32		
24										
25					LACQUER, BLACK, NO. 101	CLASS B	3-158			
26					LACQUER, GREEN, NO. 112	CLASS B	3-158			
27					LACQUER, RED, NO. 105	CLASS B	3-158			
28					LACQUER, YELLOW, NO. 121	CLASS B	3-158			
29										
30					SHELLAC SOLUTION	TYPE I, CL 2	JAN-S-732			
31	•									
32					VARNISH, PHENOL-FORMALDEHYDE,					
33					ALUMINUM CONTAINING					
34										

LIST OF SPECIFICATIONS

LINE NO	LIST OF SPECIFICATIONS	SPEC NUMBER *	REQUIRED BY
1	AMMUNITION, EXCEPT SMALL ARMS AMMUNITION, GENERAL SPEC FOR	50-0-1	DWG 73-2-281
2			
3	BRASS, COMMERCIAL; BARS, PLATES, RODS, SHAPES, SHEETS, AND STRIPS	QQ-B-611	DWG 73-2-282
4			
5	COPPER; BARS, PLATES, RODS, SHAPES, SHEETS, AND STRIPS	QQ-C-501	DWG 73-2-282
6			
7	DELAY ELEMENT, M1, NON-DELAY & DELAY ELEMENT, M2, LOAD, ASSEM, & PACK.	PXS-1306	DWG 73-2-281
8	DELAY ELEMENT, M1, NON-DELAY & DELAY ELEMENT, M2, METAL PARTS FOR	PXS-1306-1	DWG 73-2-281
9			
10	LACQUER, CELLULOSE NITRATE, AND THINNER (CLEAR AND PIGMENTED)	3-158	DWG 73-2-281
11			
12	METALS; GENERAL SPECIFICATION FOR INSPECTION OF	QQ-M-151	QQ-B-611
13			
14	PAINT, VARNISH, LACQUER & RELATED MATERIALS; GEN SPEC FOR INSP. OF	TT-P-141	3-158
15	POWDER, BLACK	JAN-P-223	DWG 73-2-281
16	PRIMER, PERCUSSION, M54	PXS-1205	DWG 74-2-80
17			
18	RELAYS, LOADING, ASSEMBLING, AND PACKING	PXS-1237	DWG P-80078
19			
20	SHELLAC SOLUTIONS (FOR USE IN AMMUNITION)	JAN-S-732	DWG 73-2-281
21	MARKING SHIPMENTS BY CONTRACTORS, STANDARD SPEC FOR	100-2	DWG 73-2-281
22			
23	VARNISH, PHENOL-FORMALDEHYDE, ALUMINUM-CONTAINING	PXS-1143	DWG 73-2-281
24			

* THE SPECIFICATION NUMBERS SHOWN ARE BASIC NUMBERS ONLY. WHEN A SPECIFICATION IS REVISED A LETTER IS AFFIXED TO ITS BASIC NUMBER. SPECIFICATIONS REFERRED TO IN THESE SPECIFICATIONS AND NOT LISTED HEREON SHALL NOT APPLY.

DELAY ELEMENT, M2
LIST OF PARTS & LIST OF SPECIFICATIONS

HEAT TREATMENT - PROTECTIVE FINISH

PHYSICAL PROPERTIES

ORIGINAL DATE OF DRAWING: SEP 30, 1949.

REVISIONS

CLASS 73 | DIVISION 2 | DRAWING 281A

DRAWING PERTAINS TO 73-2-281

WEIGHT

SCALE —

TOLERANCES OR DIMENSIONS (unless otherwise specified)

DO NOT DO | APPLY PART NO. (As Specified)

DRAWN F.K. 1948

TRACED

CHECKED

SUBMITTED ORD. ENG.

EXAMINED C.R. Dalton COL.

APPROVED C.R. Dalton COL.

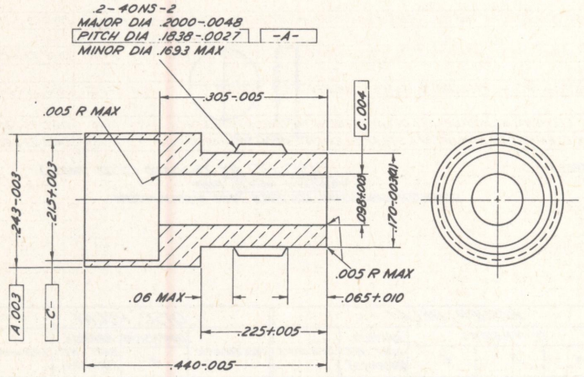
D

ORDNANCE DEPT U.S. ARMY

ORDNANCE DRAWING - SIZE D - MIL-STD-100A

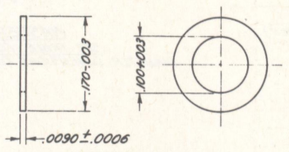
CL & DIV

D

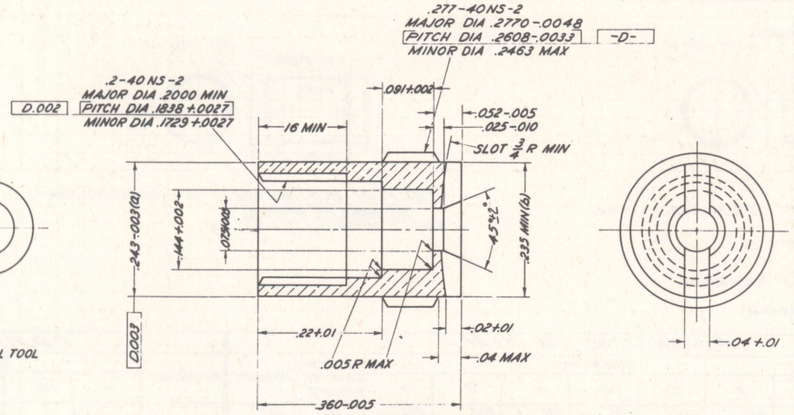


HOLDER, DELAY 73-2-282A
COMMERCIAL BRASS, ROD, COMPOSITION B, HALF-HARD
FINISH 125

NOTES:-
(a) TOOL MARKS PERMITTED
(b) OPTIONAL UNDERCUT



WASHER 73-2-282B
COPPER, STRIP, SOFT
DIAMETER DIMENSIONS CONTROL TOOL MANUFACTURE



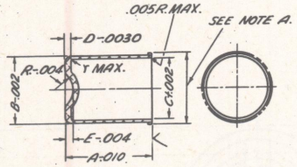
HOLDER, PRIMER 73-2-282C
COMMERCIAL BRASS, ROD, COMPOSITION B, HALF-HARD
FINISH 125

SCALE, INCHES, 10/1

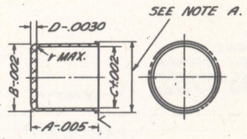
REMOVE ALL BURRS

DELAY ELEMENT, M1, NON-DELAY AND DELAY ELEMENT, M2 DETAILS

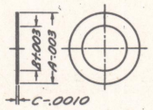
HEAT TREATMENT, PROTECTIVE FINISH	CLASS 73	DIVISION 2
PHYSICAL PROPERTIES	DRAWING PERTAINS TO 73-2-281, 73-2-280,	
ORIGINAL DATE OF DRAWING SEP 30, 1949		
REVISIONS		
WEIGHT —	DO NOT USE PART NO. (In Spec Serv)	
SCALE —		
TOLERANCE ON DIMENSIONS (Unless Otherwise Specified)	SUBMITTED	
	ENGINEER	
	APPROVED	
D	ORDNANCE DEPT U.S. ARMY	



CUP, INDENTED BOTTOM RELAY 73-2-300A ☐ (SEE TABLE)
SEE TABLE FOR MATERIAL
SURFACE MARKED √ TO HAVE 125/



CUP, FLAT BOTTOM RELAY 73-2-300B ☐ (SEE TABLE)
SEE TABLE FOR MATERIAL
SURFACE MARKED √ TO HAVE 125/



WASHER, RELAY 73-2-300C ☐ (SEE TABLE)
SEE TABLE FOR MATERIAL
DIAMETER DIMENSIONS CONTROL TOOL MANUFACTURE.



DISC, RELAY 73-2-300D ☐ (SEE TABLE)
ONIONSKIN PAPER, PINK
DIAMETER DIMENSION CONTROLS TOOL MANUFACTURE

NOTE A:- MAY BE FORMED AS SHOWN IF REQUIRED BY METHOD OF MANUFACTURE. DIAMETER NOT TO EXCEED B+.002

RELAY DESIGNATION	RELAY ASSEMBLY DRAWING NUMBER	CUP, INDENTED BOTTOM RELAY										
		PIECEMARK	DIMENSIONS A	B	C	D	E	R	r	APPROX. UNIT WT. (GRAINS)	REMARKS
M1	73-2-301	73-2-300AA	.105	.122	.110	.0115	.012	.037	.002	.21	(a.)
M2	73-2-302	73-2-300AB	.155	.122	.110	.0115	.012	.037	.002	.23	(a.)
M3	73-2-303	73-2-300AC	.250	.122	.110	.0115	.012	.037	.002	.40	(a.)
M4	73-2-304										
M5	73-2-305										
M6	73-2-306										
M7	73-2-319										

CUP, FLAT BOTTOM RELAY								
PIECEMARK	DIMENSIONS A	B	C	D	r	APPROX. UNIT WT. (GRAINS)	REMARKS
73-2-300BA	.120	.193	.173	.0115	.005	.54	(a.)
73-2-300BB	.120	.193	.173	.0115	.005	.54	(a.)
73-2-300BC	.162	.122	.110	.0115	.005	.31	(a.)
73-2-300BD	.120	.210	.190	.0115	.005	.68	(a.)

WASHER, RELAY						
PIECEMARK	DIMENSIONS A	B	C	APPROX. UNIT WT. (GRAINS)	REMARKS
73-2-300CA	.166	.062	.0025	.02	(a.)
73-2-300CB	.183	.085	.005	.06	(a.)

DISC, RELAY			
PIECEMARK	DIMENSIONS A	APPROX. UNIT WT. (GRAINS)	REMARKS
73-2-300DA	.160		

(a.) ALUMINUM, CONDITION A, SPEC. QQ-A-561. (EXCEPT FOR THICKNESS.)

LIST OF PARTS

LINE NO.	NAME OF PART	NUMBER REQD PER COMPONENT	PIECEMARK (SEE TABLE)	MATERIAL SIZE OR FORM	KIND	GRADE	SPEC. NUMBER	APPROXIMATE UNIT WEIGHT (GRAINS)	APPROX. WT. OF GROSS CASTINGS PER 1000	APPROX. WT. OF FINISHED PARTS PER 1000	REMARKS
1	CUP, FLAT BOTTOM RELAY	(c)	73-2-300B☐	SHEET	SEE TABLE						
2	CUP, INDENTED BOTTOM RELAY	(c)	73-2-300A☐	SHEET	SEE TABLE						
3	DISC, RELAY	(c)	73-2-300D☐	SHEET	ONIONSKIN PAPER, PINK		JAN-P-157				(b)
4	WASHER, RELAY	(c)	73-2-300C☐	SHEET	SEE TABLE						
5											
6											
7											
8											
9											
10											

(b) SPEC. JAN-P-157 EXCEPT COLOR.
(c) ONE OF EACH PART DIMENSIONED IN THE TABLE CONSTITUTES A SET OF PARTS FOR THE APPLICABLE RELAY.

LINE NO.	LIST OF SPECIFICATIONS	SPEC. NUMBER *	REQUIRED BY
1	ALUMINUM; PLATES AND SHEETS	QQ-A-561	DRG. 73-2-300
2	AMMUNITION, EXCEPT SMALL ARMS AMMUNITION, GENERAL SPEC. FOR	50-0-1	DRG. 73-2-300
3			
4	METALS; GENERAL SPECIFICATION FOR INSPECTION OF	QQ-M-151	QQ-A-561
5	ORDNANCE FINISHES (SURFACE ROUGHNESS)	URAX-6	DRG 73-2-300
6	PAPER; GENERAL SPECIFICATIONS	UU-P-31	JAN-P-157
7	PAPER, ONIONSKIN	JAN-P-157	DRG. 73-2-300
8			
9	PRIMER PERCUSSION ELEMENTS, DET AND RELAYS, METAL PARTS FOR	50-48-14	DRG. 73-2-300
10			
11			
12	SURFACE ROUGHNESS WAVINESS AND LAY	MIL-STD-10	DRG 73-2-300
13			
14			
15			

* THE SPECIFICATION NUMBERS SHOWN ARE BASIC NUMBERS ONLY. WHEN A SPECIFICATION IS REVISED A LETTER IS AFFIXED TO ITS BASIC NUMBER. SPECIFICATIONS REFERRED TO IN THESE SPECIFICATIONS AND NOT LISTED HEREON, SHALL NOT APPLY.

REMOVE ALL BURRS.

NOTICE:- THIS DRAWING SHALL NOT BE USED OR REPRODUCED EITHER WHOLLY OR IN PART, EXCEPT WHEN AUTHORIZED IN CONNECTION WITH UNITED STATES GOVERNMENT PROCUREMENT.

RELAY METAL PARTS DETAILS.

REVISIONS		CLASS	DIVISION	DRAWING	FILE
MAY 11, 1945		73	2	300	
1	6-12-46	SYMBOL			
2	10-7-49				
3	4-9-50				

D'FTSMAN	TRACER	ENGINEER
RHD	O.P.M.	
CHECKER	CHECKER	CHIEF D'FTSMAN
A.E.P.	L. [illegible]	M.T.

DRG. PERTAINS TO

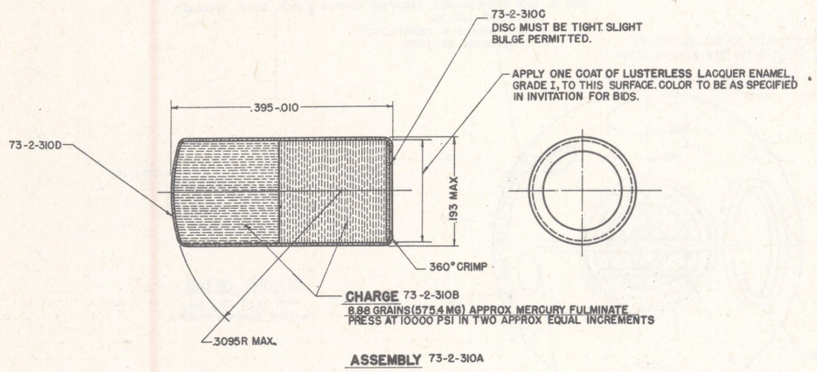
SUBMITTED:-
[signature]
CHIEF ENGR, ORD. DEPT., U. S. A.

EXAMINED:-
[signature]
COL, ORD. DEPT., U. S. A.

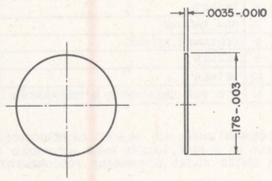
APPROVED BY ORDER OF THE CHIEF OF ORDNANCE:-
[signature]
COL, ORD. DEPT., U. S. A.

D

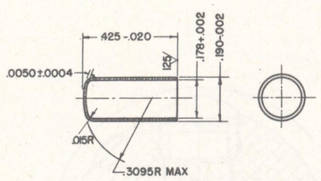
ORDNANCE DEPT. U. S. A.



ASSEMBLY 73-2-310A



DISC 73-2-310C
GILDING METAL



CUP 73-2-310D
GILDING METAL, ANNEALED

LIST OF PARTS

LINE NO.	NAME OF PART	NUMBER REQ'D PER COMPONENT	PIECE MARK	MATERIAL				APPROXIMATE UNIT WEIGHT (GRAINS)	APPROX GROSS WT. OF RAW STOCK PER 1000 ASSEMBLIES	REMARKS
				SIZE OR FORM	KIND	GRADE	SPEC NUMBER			
1	ASSEMBLY		73-2-310A				96-81-297			
2										
3	CUP	1	73-2-310D	STRIP	GILDING METAL		JAN-G-439			
4	DISC	1	73-2-310C	STRIP	GILDING METAL		JAN-G-439			
5	CHARGE	1	73-2-310B		MERCURY FULMINATE		JAN-M-219	8.88		
6										
7					LACQUER ENAMEL LUSTRELESS	I	JAN-L-73			
8										
9										

LIST OF SPECIFICATIONS

LINE NO.		SPEC NUMBER *	REQUIRED BY
1	AMMUNITION, EXCEPT SMALL ARMS AMMUNITION, GENERAL SPECIFICATION FOR	50-0-1	DWG 73-2-310
2	GILDING METAL (95/5 BRASS) SHEETS AND STRIPS	JAN-G-439	DWG 73-2-310
3	LACQUER LUSTRELESS ENAMEL	JAN-L-73	DWG 73-2-310
4	MECURY FULMINATE	JAN-M-219	DWG 73-2-310
5	METALS, GENERAL SPECIFICATION FOR INSPECTION OF	QQ-M-151	JAN-G-439
6	PAINT, VARNISH, LACQUER, AND RELATED MATERIALS; METHODS OF INSP, ETC (a)	TT-P-141	JAN-L-73
7	PRIMER-DETONATOR, M		DWG 73-2-310

* THE SPECIFICATION NUMBERS SHOWN ARE BASIC NUMBERS ONLY. WHEN A SPECIFICATION IS REVISED A LETTER IS AFFIXED TO ITS BASIC NUMBER. SPECIFICATIONS REFERRED TO IN THESE SPECIFICATIONS AND NOT LISTED HEREON SHALL NOT APPLY.

(a) REQUIRES COLOR CARD SUPPLEMENT TO SPEC 3-1.

LIST OF DRAWINGS

LINE NO.		DRAWING NUMBER
1	ASSEMBLY AND DETAILS	73-2-310
2	CARTON, PACKING	
3	BOX, PACKING	
4		
5		
6		
7		

THIS DETONATOR FOR USE IN THE FOLLOWING:
FUZE, PD, M8
FUZE, PD, M9

NOTICE: THIS DRAWING SHALL NOT BE USED OR REPRODUCED EITHER WHOLLY OR IN PART EXCEPT WHEN AUTHORIZED IN CONNECTION WITH UNITED STATES GOVERNMENT PROCUREMENT.

REMOVE ALL BURRS

0 INCH

0 1 2 INCHES

DETONATOR, M-
ASSEMBLY AND DETAILS

OCT 21, 1949	CLASS	DIVISION	DRAWING	FILE
REVISIONS	73	2	310	

TOLERANCE ON DIMENSIONS NOT OTHERWISE SPECIFIED
DECIMAL ±
FRACTIONAL ±
ANGULAR ±

D'FTSMAN	TRACER	ENGINEER
	S.P.	H. ROBERTSON CORP
CHECKER S.G.		ENGINEER

SUBMITTED:- O. F. Teitsheid, AMM. DES. ENG., ORD. DEPT., U. S. A.

EXAMINED:- DES. ENG., ORD. DEPT., U. S. A.

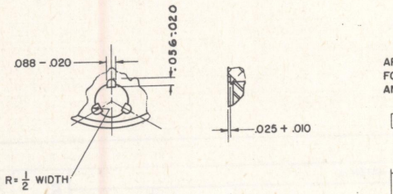
APPROVED BY ORDER OF THE CHIEF OF ORDNANCE:- C. R. Dutton, COL., ORD. DEPT., U. S. A.

DRG. PERTAINS TO

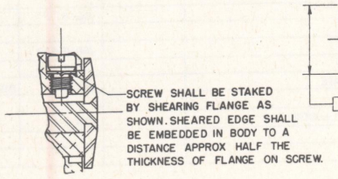
D

ORDNANCE DEPT., U. S. A.

SUPERSEDES A16-11-22, A16-11-28, E16-11-27 W.O/C, OCT 21, 1949

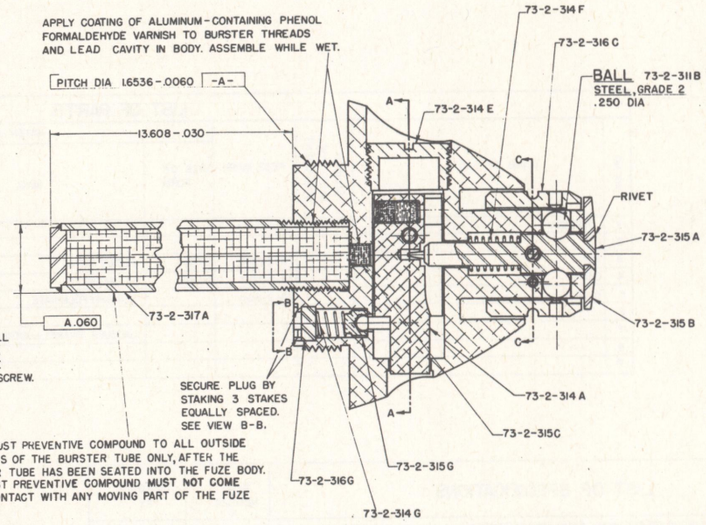


VIEW B-B

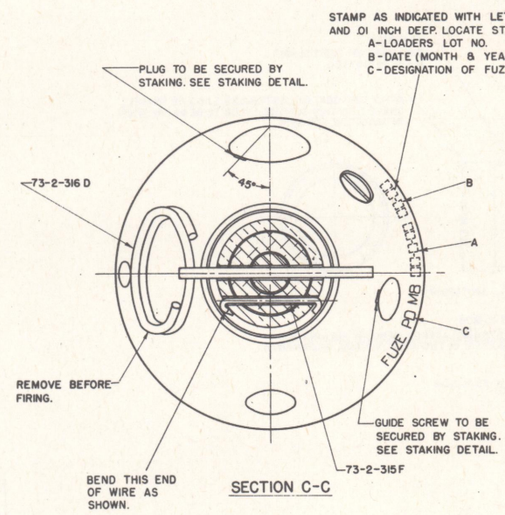


BODY & SET SCREW DETAIL
FOR SET SCREW 73-2-316 B

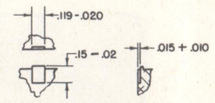
APPLY COATING OF ALUMINUM-CONTAINING PHENOL FORMALDEHYDE VARNISH TO BURSTER THREADS AND LEAD CAVITY IN BODY. ASSEMBLE WHILE WET.



APPLY RUST PREVENTIVE COMPOUND TO ALL OUTSIDE SURFACES OF THE BURSTER TUBE ONLY, AFTER THE BURSTER TUBE HAS BEEN SEATED INTO THE FUZE BODY. THE RUST PREVENTIVE COMPOUND MUST NOT COME INTO CONTACT WITH ANY MOVING PART OF THE FUZE PROPER.



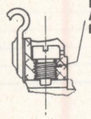
SECTION C-C



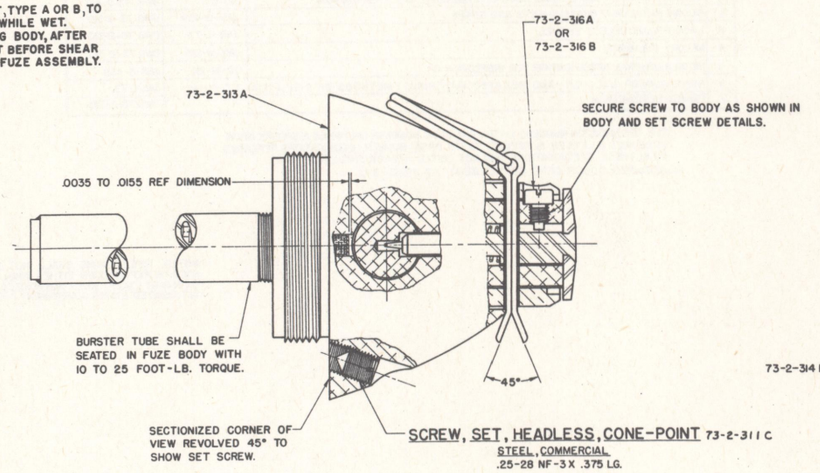
STAKING DETAIL
FOR PLUG 73-2-314 E
& GUIDE SCREW 73-2-316 A

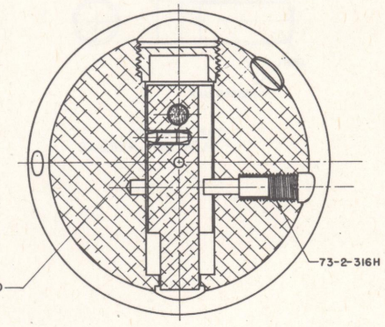
LINE NO.	LIST OF DRAWINGS	DRAWING NUMBER
1	ASSEMBLY	73-2-311
2	DETONATOR, M22	73-2-189
3	LIST OF PARTS AND LIST OF SPECS	73-2-311A
4	DETAILS	73-2-313
5	DETAILS	73-2-314
6	DETAILS	73-2-315
7	BOX, PACKING	76-1-1194
8	CONTAINER, PACKING	76-1-1193
9	DETAILS	73-2-316
10	DETAILS	73-2-317
11	STD. FOR DIMENSIONING & TOLERANCING	30-1-7

APPLY A LIGHT COAT OF PETTMAN CEMENT, TYPE A OR B, TO THREADS OF SET SCREW AND ASSEMBLE WHILE WET. PLUNGER MUST BE FREE TO MOVE ALONG BODY, AFTER ASSEMBLY OF SET SCREW TO BODY BUT BEFORE SHEAR PIN AND COTTER PIN BECOME PART OF FUZE ASSEMBLY.



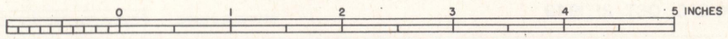
BODY & SET SCREW DETAIL
FOR SET SCREW 73-2-316 A





SECTION A-A

ASSEMBLY 73-2-311A1



NOTICE: THIS DRAWING SHALL NOT BE USED OR REPRODUCED EITHER WHOLLY OR IN PART, EXCEPT WHEN AUTHORIZED IN CONNECTION WITH UNITED STATES GOVERNMENT PROCUREMENT.

SUPERSEDES C8-11-333 WO/C, OCT 21, 1949

FUZE, POINT DETONATING, M8 ASSEMBLY

HEAT TREATMENT & PROTECTIVE FINISH

PHYSICAL PROPERTIES

ORIGINAL DATE OF DRAWING OCT 21, 1949

REVISIONS

NO.	DATE	WAS THIS ITEM NO.	BY	CHK
1	3-10-50			

CLASS	DIVISION	DRAWING
73	2	311

DRAWING PERTAINS TO

DRG NO.	MAJOR ITEM	DRG NO.	MAJOR ITEM

WEIGHT —

SCALE —

DO NOT SCALE DRAWING

APPLY PART NO. (As Specified)

DRAWN FK 1949

CHECKED FK 1949

ENG APP 10-21-49

SUPV 10-21-49

TOLERANCES OR DIMENSIONS (Unless Otherwise Specified)

FROM PIN. SURFACES
DECIMAL ±
FRACTIONAL ±
ANGULAR ±
FROM UNFIN. SURFACES
FRACTIONAL ±
ANGULAR ±
SHARP CORNERS AND EDGES BROKEN TO APPROX. .01

SUBMITTED
A. H. Litchfield
Asstd. DES. Engr. / for DEPT OF U.S. ARMY

EXAMINED
Chief, Engr. Div. / for DEPT OF U.S. ARMY

APPROVED FOR CHIEF OF ORDNANCE
C. R. Dalton
C&R, ORD DEPT. U.S. ARMY

ORDNANCE DEPT U.S. ARMY

SIZE D

LIST OF PARTS

LINE NO.	NAME OF PART	NUMBER REQ'D PER COMPONENT	PIECE-MARK	MATERIAL: SIZE OR FORM	MATERIAL: KIND	MATERIAL: GRADE	MATERIAL: SPEC. NUMBER	APPROXIMATE UNIT WEIGHT (GRAINS)	APPROX GROSS WT OF RAW STOCK PER 1000 ASSEMBLIES	REMARKS
1	ASSEMBLY		73-2-311A				96-81-291			
2	BURSTER ASSEMBLY		73-2-317A							
3	BURSTER TUBE ASSEMBLY		73-2-317C							(a) (b)
4	CUP ASSEMBLY		73-2-315C							
5	DETONATOR, M 22	1	73-2-189A				50-78-7			
6	RING AND PIN ASSEMBLY		73-2-316D							
7	SET BACK PIN ASSEMBLY		73-2-315G							
8	SLIDER ASSEMBLY		73-2-314A							
9										
10	BALL	2	73-2-311B		STEEL	I	JAN-B-1083			(c)
11	BODY	1	73-2-313A		ALUMINUM-BASE-ALLOY	CLASS 2	QQ-A-591			(d)
12	CHARGE, BURSTER	1	73-2-317B		TETRYL	I, CLASS a	JAN-T-339			
13	CHARGE, RELAY	1	73-2-315D		TETRYL	I, CLASS a	JAN-T-339			
14	CUP	1	73-2-315E	SHEET	BRASS, COMMERCIAL, B ANNEAL	COMP C	QQ-B-611			
15	HEAD, STRIKER	1	73-2-315B	BAR	STEEL, AS-COLD-FINISHED	FS1010	QQ-S-633			(f) (g) (p)
16	PIN, COTTER	1	73-2-316E		STEEL		COMMERCIAL			(f)
17	PIN, LOCK	1	73-2-314D	ROD	BRASS, COMMERCIAL	COMP B HALF HARD	QQ-B-611			
18	PIN, SET BACK	1	73-2-315K	BAR	STEEL, AS-COLD-FINISHED	FS1020	QQ-S-633			(c) (f) (h)
19	PLUG	1	73-2-314E	ROD	BRASS, COMMERCIAL	COMP B HALF HARD	QQ-B-611			(i)
20	PLUG, BURSTER TUBE	1	73-2-317E	BAR	STEEL, AS-COLD-FINISHED	FS1020	QQ-S-633			(J) (K)
21	PLUG, SET BACK	1	73-2-316G	STRIP	STEEL, COLD-ROLLED	HALF-HARD DULL FINISH	QQ-S-636			(c) (f)
22	RETAINER	1	73-2-316C	ROD	BRASS, COMMERCIAL	COMP B HALF-HARD	QQ-B-611			
23	RING, SAFETY PIN	1	73-2-316F	WIRE	STEEL, TYPE I	WD1020	48-5			(f) (L) (p)
24	SCREW, GUIDE	1	73-2-316H	ROD	BRASS, COMMERCIAL	COMP B HALF-HARD	QQ-B-611			
25	SCREW, SET	1	73-2-316A	BAR	STEEL, AS-COLD-FINISHED	FS1117	QQ-S-633			(c) (f) (m) (n)
26	SCREW, SET (ALTERNATE)		73-2-316B	BAR	STEEL, AS-COLD-FINISHED	FS1117	QQ-S-633			(n) (c) (f) (o)
27	SCREW, SET, HEADLESS, CONE-POINT	1	73-2-311C		STEEL		COMMERCIAL			(P)
28	SLIDER	1	73-2-314B	ROD	ALUMINUM ALLOY	COND T	QQ-A-351			(q)
29	SLIDER (ALTERNATE)		73-2-314C	ROD	BRASS, COMMERCIAL	COMP B HALF-HARD	QQ-B-611			(r)
30	SOCKET, SET-BACK PIN	1	73-2-315H	ROD	BRASS, COMMERCIAL	COMP B HALF-HARD	QQ-B-611			
31	SPRING	1	73-2-314F	WIRE	STEEL (CARBON) MUSIC SPRING	COMP A	QQ-W-470			(c) (f)
32	SPRING, SET BACK PIN	1	73-2-314G	WIRE	STEEL (CARBON) MUSIC SPRING	COMP A	QQ-W-470			(o) (f)
33	STRIKER	1	73-2-315A	BAR	STEEL, AS-COLD-FINISHED	FS1117	QQ-S-633			(f) (s) (m) (p)
34	TUBE	1	73-2-317D	TUBING	STEEL, COLD-DRAWN, TYPE I	CLASS A WD1020	57-180			(a) (t)
35	TUBE, BURSTER (ALTERNATE)		73-2-317F	TUBING	STEEL, COLD-DRAWN, TYPE I		57-180			(u) (t)
36	WIRE, SHEAR	1	73-2-315F	WIRE	COPPER, SOFT		QQ-W-341			
37					BARIUM STEARATE		JAN-B-366			
38					GRAPHITE	I	JAN-G-155			
39					VARNISH, PHENOL FORMALDEHYDE		PXS-1143			
40					VARNISH, PHENOL FORMALDEHYDE RESIN		3-167			(v)
41					PETTMAN CEMENT	TYPE A OR B	JAN-C-99			(w)
					COMPOUND, RUST PREVENTIVE, LIGHT		2-84			

(c) PROTECTIVE FINISH, TYPE I, CLASS OS, SPEC. 57-0-2
(d) ALTERNATIVE MATERIAL:-(c) ALUMINUM-ALLOY, ROD, COND T, SPEC QQ-A-351, OR ALUMINUM-ALLOY, CLASS I, FORGING, HEAT TREATED, SPEC QQ-A-367.
(e) ALTERNATE MATERIALS ARE INTENDED TO BE USED ONLY WHEN PRESCRIBED MATERIALS ARE NOT AVAILABLE.
(f) PROTECTIVE FINISH, TYPE I, CLASS RSC, SPEC 57-0-2
(g) ALTERNATIVE MATERIAL:-(c) STEEL, AS-COLD-FINISHED, FS1020, FS1022, FS1117, SPEC QQ-S-633.
(h) ALTERNATIVE MATERIAL:-(c) STEEL, AS-COLD-FINISHED, FS1022, B1112, B1113, FS1117, FS1137, SPEC QQ-S-633.
(i) ALTERNATIVE MATERIAL:-(c) ZINC-BASE-ALLOY, DIE-CASTING, COMP A, SPEC QQ-Z-363.
(J) ALTERNATIVE MATERIAL:-(c) STEEL, AS-COLD-FINISHED FS1022, B1112, B1113, FS1117, SPEC QQ-S-633.
(K) NOT REQUIRED IF 73-2-317F IS USED.
(L) PROTECTIVE FINISH, TYPE II, CLASS B, SPEC 57-0-2.
(m) ALTERNATIVE MATERIAL:-(c) STEEL, AS-COLD-FINISHED, FS1020, FS1022, FS1117, SPEC QQ-S-633.
(n) NOT REQUIRED WHEN 73-2-316B IS USED.
(o) ALTERNATIVE MATERIAL:-(c) STEEL, AS-COLD-FINISHED, FS1020, FS1022, FS1117, SPEC QQ-S-633.
(P) PROTECTIVE FINISH, TYPE I, CLASS TS OR TSC, SPEC 57-0-2.
(q) NOT REQUIRED WHEN 73-2-314C IS USED.
(r) NOT REQUIRED WHEN 73-2-314B IS USED.
(s) PROTECTIVE FINISH, TYPE II, CLASS A, SPEC 57-0-2.
(t) ALTERNATIVE MATERIAL:-(c) TUBING, STEEL, COLD-DRAWN, WD1020, TYPE III, CLASS A, SPEC 57-180.
(u) NOT REQUIRED WHEN 73-2-317C IS USED.
(v) ALTERNATIVE MATERIAL:-(c) VARNISH, PHENOLIC, BAKED UNPIGMENTED, SPEC 3-221.
(a) NOT REQUIRED IF 73-2-317F IS USED.
(b) FOR WELDING SYMBOLS SEE JAN-STD-19.
(w) ALTERNATIVE MATERIAL:-(c) ALUMINUM-CONTAINING PHENOL FORMALDEHYDE VARNISH SPEC PXS-1143

SUPERSEDES C8-11-332 WO/C, OCT 21, 1949

LIST OF SPECIFICATIONS

LINE NO.		SPEC. NUMBER *	REQUIRED BY
1	AMMUNITION EXCEPT SMALL ARMS AMMUNITION GENERAL SPEC. FOR	50-0-1	DWG 73-2-311
2	ALUM ALLOY, (AI-17) ALUM.-COPPER, MAGNESIUM-MANGANESE; BARS	QQ-A-351	DWG. 73-2-314
3	ALUMINUM ALLOY, FORGINGS, HEAT-TREATED	QQ-A-367	DWG. 73-2-313
4	ALUMINUM BASE ALLOY, DIE-CASTINGS	QQ-A-591	DWG. 73-2-313
5	BRASS; BARS, PLATES, RODS, SHAPES, SHEETS, AND STRIPS	QQ-B-611	DWG. 73-2-315
6	BARIUM STEARATE	JAN-B-366	DWG. 73-2-317
7	FINISHES PROTECTIVE, FOR IRON AND STEEL PARTS	57-0-2	DWG. 73-2-311
8	FUZE, SHELL, 4.2 INCH CHEMICAL MORTAR, M8	96-81-291	DWG. 73-2-311
9	BALLS, BEARING, STEEL	JAN-B-1083	DWG. 73-2-311
10	GRAPHITE, (FOR USE IN AMMUNITION)	JAN-G-155	DWG. 73-2-317
11	COMPOUND, RUST PREVENTIVE, LIGHT	2-84	DWG. 73-2-311
12	METALS; GENERAL SPECIFICATION FOR INSPECTION OF	QQ-M-151	QQ-B-611
13			
14	DETONATORS, LOADING, ASSEMBLING AND PACKING	50-78-7	DWG 73-2-189
15	SURFACE ROUGHNESS WAVINESS AND LAY	MIL-STD-10	DWG 73-2-314
16	STEEL, CARBON; BARS (GENERAL PURPOSE)	QQ-S-633	DWG. 73-2-315
17	STEEL, LOW CARBON, SHEETS AND STRIPS	QQ-S-636	DWG. 73-2-316
18	TETRYL	JAN-T-339	DWG. 73-2-317
19	TUBING MECH. OR STRUCTURAL STEEL, CARBON AND ALLOY, ETC.	57-180	DWG. 73-2-317
20	VARNISH, PHENOL FORMALDEHYDE ALUMINUM-CONTAINING	PXS-1143	DWG. 73-2-311
21	WELDING SYMBOLS	JAN-STD-19	DWG. 73-2-317
22	WIRE, COPPER, SOFT OR ANNEALED	QQ-W-341	DWG. 73-2-315
23	WIRE, SOFT, IRON AND STEEL, BARE AND COATED	48-5	DWG. 73-2-316
24	WIRE, STEEL (CARBON); SPRING, MUSIC	QQ-W-470	DWG. 73-2-314
25	VARNISH, PHENOL FORMALDEHYDE RESIN	3-167	DWG. 73-2-317
26	ZINC BASE ALLOY; DIE CASTINGS	QQ-Z-363	DWG. 73-2-314
27	VARNISH, PHENOLIC, BAKED UNPIGMENTED	3-221	DWG. 73-2-317
28	CEMENT, PETTMAN	JAN-C-99	DWG 73-2-311

* THE SPECIFICATION NUMBERS SHOWN ARE BASIC NUMBERS ONLY. WHEN A SPECIFICATION IS REVISED A LETTER IS AFFIXED TO ITS BASIC NUMBER. SPECIFICATIONS REFERRED TO IN THESE SPECIFICATIONS AND NOT LISTED HEREON SHALL NOT APPLY.

NOTICE: THIS DRAWING SHALL NOT BE USED NOR REPRODUCED EITHER WHOLLY OR IN PART EXCEPT WHEN AUTHORIZED IN CONNECTION WITH UNITED STATES GOVERNMENT PROCUREMENT.

FUZE, PD M8
LIST OF PARTS AND SPECIFICATIONS

OCT 21, 1949

REVISIONS
1 3-10-50

DRG. PERTAINS TO
73-2-311

CLASS	DIVISION	DRAWING	FILE
73	2	311A	

TOLERANCE ON DIMENSIONS NOT OTHERWISE SPECIFIED
DECIMAL ±
FRACTIONAL ±
ANGULAR ±

D'FTSMAN | TRACER A.K. | ENGINEER
CHECKER SG | ENGINEER H. ROBERTSON CHIEF

SUBMITTED:- A.F. Tritschler — AMM. DES. ENG. ORD. DEPT., U.S.A.

EXAMINED:- ORD. ENG. ORD. DEPT., U.S.A.

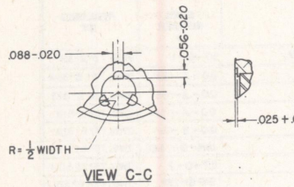
APPROVED BY ORDER OF THE CHIEF OF ORDNANCE:- C.R. Dutton — COL. ORD. DEPT., U.S.A.

D

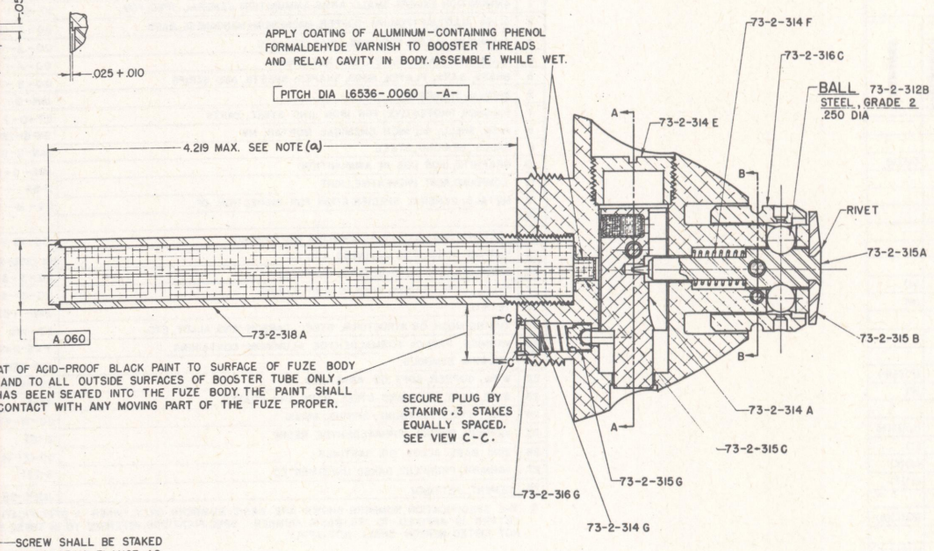
ORDNANCE DEPT., U.S.A.

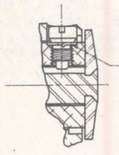
ORDNANCE DRAWING – SIZE D (ALTERNATIVE)

CL & DIV D



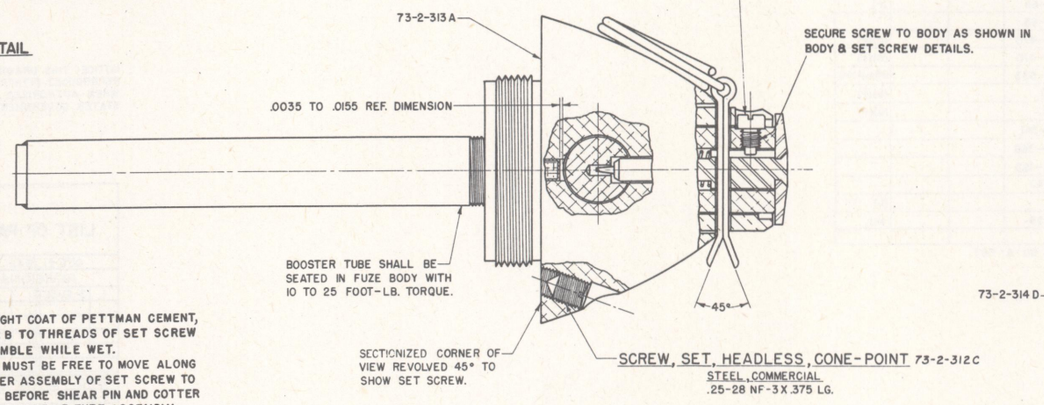
VIEW C-C

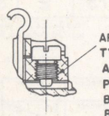




SCREW SHALL BE STAKED BY SHEARING FLANGE AS SHOWN. SHEARED EDGE SHALL BE EMBEDDED IN BODY TO A DISTANCE APPROX HALF THE THICKNESS OF FLANGE ON SCREW.

BODY & SET SCREW DETAIL
FOR SET SCREW 73-2-316 B

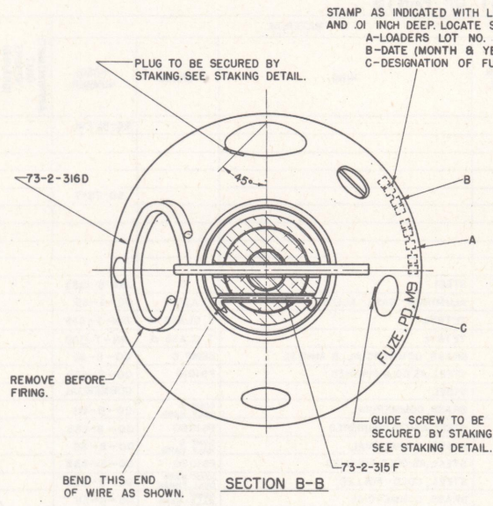




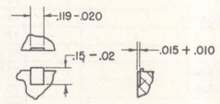
APPLY A LIGHT COAT OF PETTMAN CEMENT, TYPE A OR B TO THREADS OF SET SCREW AND ASSEMBLE WHILE WET. PLUNGER MUST BE FREE TO MOVE ALONG BODY, AFTER ASSEMBLY OF SET SCREW TO BODY BUT BEFORE SHEAR PIN AND COTTER PIN BECOME PART OF FUZE ASSEMBLY.

BODY & SET SCREW DETAIL
FOR SET SCREW 73-2-316 A

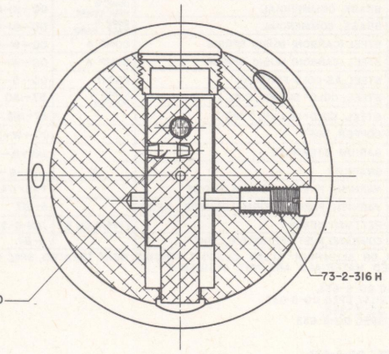
ASSEMBLY 73-2-312A1



SECTION B-B



STAKING DETAIL
FOR PLUG 73-2-314 E
& GUIDE SCREW 73-2-316 H



SECTION A-A

NOTE (a): DIMENSION TO BE GAGED.

LINE NO.	LIST OF DRAWINGS	DRAWING NUMBER
1	ASSEMBLY	73-2-312
2	DETONATOR, M22	73-2-189
3	LIST OF PARTS AND LIST OF SPECS	73-2-312 A
4	DETAILS	73-2-313
5	DETAILS	73-2-314
6	DETAILS	73-2-315
7	DETAILS	73-2-316
8	DETAILS	73-2-318
9	BOX, PACKING	76-1-1196
10	CONTAINER, PACKING	76-1-1195
11	STD. FOR DIMENSIONING & TOLERANCING	30-1-7

NOTICE: THIS DRAWING SHALL NOT BE USED OR REPRODUCED EITHER WHOLLY OR IN PART EXCEPT WHEN AUTHORIZED IN CONNECTION WITH UNITED STATES GOVERNMENT PROCUREMENT.

FUZE, POINT DETONATING, M9 ASSEMBLY

PLAT TREATMENT & PROTECTIVE FINISH	CLASS	DIVISION	DRAWING
PHYSICAL PROPERTIES	73	2	312

DRAWING PERTAINS TO

ORIGINAL DATE OF DRAWING OCT 21, 1949

REVISIONS

1 3-10-50

WEIGHT — SCALE —

DO NOT SCALE DRAWING

APPLY PART NO. (As Specified)

TOLERANCES ON DIMENSIONS (Unless Otherwise Specified)

DRAWN TK 7-23
TRACED TK 7-23
CHK'D MJ 7-28
ENGR sdh 8-9

SUBMITTED C. F. Traitschold ASSIST. DES. ENG.

EXAMINED ORD. ENG.

APPROVED COL.

SIZE D

ORDNANCE DEPT U.S. ARMY

0 1 2 3 4 5 INCHES

SUPERSEDES C8-11-336 WO/C, OCT 21, 1949

LIST OF PARTS

LINE NO.	NAME OF PART	NUMBER REQ'D. PER COMPONENT	PIECE MARK	MATERIAL: SIZE OR FORM	MATERIAL: KIND	MATERIAL: GRADE	MATERIAL: SPEC. NUMBER	APPROXIMATE UNIT WEIGHT (GRAINS)	APPROX. GROSS WT. OF RAW STOCK PER 1000 ASSEMBLIES	REMARKS
1	ASSEMBLY		73-2-312A				96-81-291			
2	BOOSTER ASSEMBLY		73-2-318A							(v)(w)
3	BOOSTER TUBE ASSEMBLY		73-2-318C							
4	CUP ASSEMBLY		73-2-315C				50-78-7			
5	DETONATOR, M 22	1	73-2-189A							
6	RING AND PIN ASSEMBLY		73-2-316D							
7	SET BACK PIN ASSEMBLY		73-2-315G							
8	SLIDER ASSEMBLY		73-2-314A							
9										
10	BALL	2	73-2-312B		STEEL	2	JAN-B-1083			(x)
11	BODY	1	73-2-313A		ALUMINUM-BASE-ALLOY	CLASS 2	QQ-A-591			(a)
12	CHARGE, BOOSTER	1	73-2-318B		TETRYL	I, CLASS d	JAN-T-339			
13	CHARGE, RELAY	1	73-2-315D		TETRYL	I, CLASS d	JAN-T-339			
14	CUP	1	73-2-315E	SHEET	BRASS, COMMERCIAL, B ANNEAL	COMP. C	QQ-B-611			
15	HEAD, STRIKER	1	73-2-315B	BAR	STEEL, AS-COLD-FINISHED	FS1010	QQ-S-633			(c)(d)(o)
16	PIN, COTTER	1	73-2-316E		STEEL		COMMERCIAL			(c)
17	PIN, LOCK	1	73-2-314D	ROD	BRASS, COMMERCIAL	COMP. B HALF HARD	QQ-B-611			
18	PIN, SET BACK	1	73-2-315K	BAR	STEEL, AS-COLD-FINISHED	FS1020	QQ-S-633			(c)(e)(x)
19	PLUG	1	73-2-314E	ROD	BRASS, COMMERCIAL	COMP. B HALF HARD	QQ-B-611			(g)
20	PLUG, BOOSTER TUBE	1	73-2-318D	BAR	STEEL, AS-COLD-FINISHED	FS1020	QQ-S-633			(g)(v)
21	PLUG, SET BACK	1	73-2-316G	STRIP	STEEL, COLD-ROLLED	HALF-HARD DULL FINISH	QQ-S-636			(c)(x)
22	RETAINER	1	73-2-316C	ROD	BRASS, COMMERCIAL	COMP. B HALF HARD	QQ-B-611			
23	RING, SAFETY PIN	1	73-2-316F	WIRE	STEEL, TYPE I	WD1020	48-5			(c)(k)(o)
24	SCREW, GUIDE	1	73-2-316H	ROD	BRASS, COMMERCIAL	COMP. B HALF-HARD	QQ-B-611			
25	SCREW, SET	1	73-2-316A	BAR	STEEL, AS-COLD-FINISHED	FS1117	QQ-S-633			(c)(L)(m)(x)
26	SCREW, SET (ALTERNATE)		73-2-316B	BAR	STEEL, AS-COLD-FINISHED	FS1117	QQ-S-633			(c)(h)(v)(x)
27	SCREW, SET, HEADLESS, CONE-POINT	1	73-2-312C		STEEL		COMMERCIAL			(o)
28	SLIDER	1	73-2-314B	ROD	ALUMINUM-ALLOY	COND. T	QQ-A-351			(p)
29	SLIDER (ALTERNATE)		73-2-314C	ROD	BRASS, COMMERCIAL	COMP. B HALF HARD	QQ-B-611			(q)
30	SOCKET, SET-BACK PIN	1	73-2-315H	ROD	BRASS, COMMERCIAL	COMP. B HALF-HARD	QQ-B-611			
31	SPRING	1	73-2-314F	WIRE	STEEL (CARBON) MUSIC SPRING	COMP. A	QQ-W-470			(c)(x)
32	SPRING, SET BACK PIN	1	73-2-314G	WIRE	STEEL (CARBON) MUSIC SPRING	COMP. A	QQ-W-470			(c)(x)
33	STRIKER	1	73-2-315A	BAR	STEEL, AS-COLD-FINISHED	FS1117	QQ-S-633			(c)(L)(r)(o)
34	TUBE	1	73-2-318E	TUBING	STEEL, COLD-DRAWN, TYPE I	GLASS A WD1020	57-180			(c)(v)
35	TUBE, BOOSTER (ALTERNATE)		73-2-318F	TUBING	STEEL, COLD-DRAWN, TYPE I	GLASS A WD1020 DEEP DRAWING QUALITY	57-180			(c)(t)
36	TUBE, BOOSTER (ALTERNATE)		73-2-318G	STRIP	STEEL, COLD-ROLLED		QQ-S-636			(h)
37	WIRE, SHEAR	1	73-2-315F	WIRE	COPPER, SOFT		QQ-W-341			
38					BARIUM STEARATE		JAN-B-366			
39					GRAPHITE	I	JAN-G-155			
40					PAINT, ACID-PROOF, BLACK		JAN-P-450			
41					VARNISH, PHENOL FORMALDEHYDE	AL CONTAINING	PXS-1143			
42					VARNISH, PHENOL FORMALDEHYDE RESIN		3-167			(u)
43					PETTMAN CEMENT	TYPE A OR B	JAN-C-99			(y)

(b) ALTERNATIVE MATERIALS ARE INTENDED TO BE USED ONLY WHEN PRESCRIBED MATERIALS ARE NOT AVAILABLE.
(c) PROTECTIVE FINISH, TYPE I, CLASS RSC, SPEC. 57-0-2.
(d) ALTERNATIVE MATERIAL: (b) STEEL, AS-COLD-FINISHED, FS1117, FS1020, FS1022, SPEC QQ-S-633.
(e) ALTERNATIVE MATERIAL: (b) STEEL, AS-COLD-FINISHED, FS1022, B1112, B1113, FS1117, FS1137, SPEC QQ-S-633.
(f) ALTERNATIVE MATERIAL: b ZINC-BASE-ALLOY, DIE-CASTING, COMP. A, SPEC. QQ-Z-363.
(g) ALTERNATIVE MATERIAL: b TEL, AS-COLD-FINISHED, FS1022, B1112, B1113, FS1117, SPEC QQ-S-633.
(h) NOT REQUIRED IF 73-2-316E OR 73-2-318C IS USED.
(k) PROTECTIVE FINISH, TYPE I, CLASS B, SPEC. 57-0-2.
(L) ALTERNATIVE MATERIAL: (b) STEEL, AS-COLD-FINISHED, FS1020, FS1022, OR FS1117, SPEC. QQ-S-633
(m) NOT REQUIRED WHEN 73-2-316B IS USED.
(n) ALTERNATIVE MATERIAL: b STEEL, AS-COLD-FINISHED, FS1020 OR FS1022, SPEC QQ-S-633.
(o) PROTECTIVE FINISH, TYPE , CLASS TS OR TSC, SPEC. 57-0-2.
(p) NOT REQUIRED WHEN 73-2-314C IS USED.
(q) NOT REQUIRED WHEN 73-2-314B IS USED.
(r) PROTECTIVE FINISH, TYPE II CLASS A, SPEC. 57-0-2.
(s) ALTERNATIVE MATERIAL: b TUBING, STEEL, COLD-DRAWN, WD1020, TYPE III, CLASS A, SPEC. 57-180.
(t) NOT REQUIRED WHEN 73-2-318C OR 73-2-318G IS USED.
(u) ALTERNATIVE MATERIAL: b VARNISH, PHENOLIC, BAKED UNPIGMENTED, SPEC. 3-221.
(v) NOT REQUIRED IF 73-2-318E OR 73-2-318G IS USED.
(w) FOR WELDING SYMBOLS SEE JAN-STD-19.
(x) PROTECTIVE FINISH, TYPE I, CLASS OS, SPEC. 57-0-2.
(a) ALTERNATIVE MATERIAL: (b) ALUMINUM-ALLOY, ROD, COND. T, SPEC QQ-A-351, OR ALUMINUM-ALLOY, CLASS I, FORGING, HEAT TREATED, SPEC QQ-A-367.
(y) ALTERNATIVE MATERIAL: (b) ALUMINUM-CONTAINING PHENOL FORMALDEHYDE VARNISH SPEC PXS-1143.

SUPERSEDES C8-11-335 W/C, OCT 21, 1949

LIST OF SPECIFICATIONS

LINE NO.	LIST OF SPECIFICATIONS ▲	SPECIFICATION NUMBER *	REQUIRED BY
1	AMMUNITION EXCEPT SMALL ARMS AMMUNITION GENERAL SPEC. FOR	50-0-1	DWG. 73-2-312
2	ALUMINUM-ALLOY, AI-17 ALUMINUM-COPPER, MAGNESIUM MANGANESE; BARS	QQ-A-351	DWG. 73-2-314
3	ALUMINUM ALLOY, FORGINGS, HEAT-TREATED	QQ-A-367	DWG. 73-2-313
4	ALUMINUM BASE ALLOY, DIE-CASTINGS	QQ-A-591	DWG. 73-2-313
5	BRASS; BARS, PLATES, RODS, SHAPES, SHEETS, AND STRIPS	QQ-B-611	DWG. 73-2-315
6	BARIUM STEARATE	JAN-B-366	DWG. 73-2-318
7	FINISHES, PROTECTIVE, FOR IRON AND STEEL PARTS	57-0-2	DWG. 73-2-312
8	FUZE, SHELL, 4.2 INCH CHEMICAL MORTAR, M9	96-81-292	DWG. 73-2-312
9			
10	GRAPHITE (FOR USE IN AMMUNITION)	JAN-G-155	DWG. 73-2-318
11	BALLS, BEARING, STEEL	JAN-B-1083	DWG. 73-2-312
12	METALS; GENERAL SPECIFICATION FOR INSPECTION OF	QQ-M-151	QQ-B-611
13	PAINT, ACID-PROOF, BLACK (FOR AMMUNITION)	JAN-P-450	DWG. 73-2-312
14	DETONATORS, LOADING, ASSEMBLING AND PACKING	50-78-7	DWG. 73-2-189
15	SURFACE ROUGHNESS WAVINESS AND LAY	MIL-STD-10	DWG 73-2-314
16	STEEL, CARBON; BARS (GENERAL PURPOSE)	QQ-S-633	DWG. 73-2-315
17	STEEL, LOW CARBON, SHEETS AND STRIPS	QQ-S-636	DWG. 73-2-316
18	TETRYL	JAN-T-339	DWG. 73-2-318
19	TUBING MECHANICAL OR STRUCTURAL STEEL, CARBON AND ALLOY ETC.	57-180	DWG. 73-2-318
20	VARNISH, PHENOL FORMALDEHYDE ALUMINUM-CONTAINING	PXS-1143	DWG. 73-2-312
21	WELDING SYMBOLS	JAN-STD-19	DWG. 73-2-318
22	WIRE, COPPER, SOFT OR ANNEALED	QQ-W-341	DWG. 73-2-318
23	WIRE, SOFT, IRON AND STEEL, BARE AND COATED	48-5	DWG. 73-2-316
24	WIRE, STEEL (CARBON); SPRING, MUSIC	QQ-W-470	DWG. 73-2-314
25	VARNISH, PHENOL FORMALDEHYDE RESIN	3-167	DWG. 73-2-318
26	ZINC BASE ALLOY; DIE CASTINGS	QQ-Z-363	DWG. 73-2-318
27	VARNISH, PHENOLIC, BAKED UNPIGMENTED	3-221	DWG. 73-2-318
28	CEMENT, PETTMAN	JAN-C-99	DWG 73-2-312

* THE SPECIFICATION NUMBERS SHOWN ARE BASIC NUMBERS ONLY. WHEN A SPECIFICATION IS REVISED A LETTER IS AFFIXED TO ITS BASIC NUMBER. SPECIFICATIONS REFERRED TO IN THESE SPECIFICATIONS AND NOT LISTED HEREON SHALL NOT APPLY.

NOTICE: - THIS DRAWING SHALL NOT BE USED NOR REPRODUCED EITHER WHOLLY OR IN PART EXCEPT WHEN AUTHORIZED IN CONNECTION WITH UNITED STATES GOVERNMENT PROCUREMENT.

FUZE, POINT DETONATING, M9
LIST OF PARTS AND SPECIFICATIONS

OCT 21, 1949	CLASS	DIVISION	DRAWING	FILE
REVISIONS	73	2	312A	
1 3-10-50				

TOLERANCE ON DIMENSIONS NOT OTHERWISE SPECIFIED
DECIMAL ±
FRACTIONAL ±
ANGULAR ±

DRAFTSMAN: TRACER A.K. | ENGINEER
CHECKER | ENGINEER H. ROBERTSON CHIEF

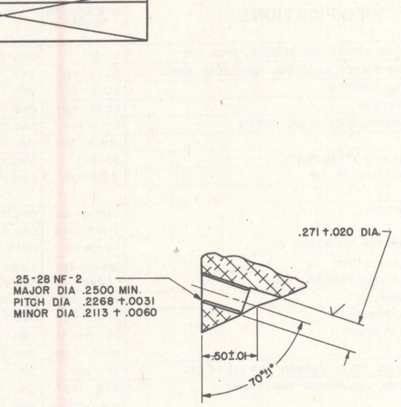
DRG. PERTAINS TO 73-2-312

SUBMITTED: C. F. Teitscheid, AMM. DES. ENG. ORD. DEPT. U.S.A.
EXAMINED: ORD. ENG. ORD. DEPT. U.S.A.
APPROVED BY ORDER OF THE CHIEF OF ORDNANCE: C. R. Dutton, COL. ORD. DEPT. U.S.A.

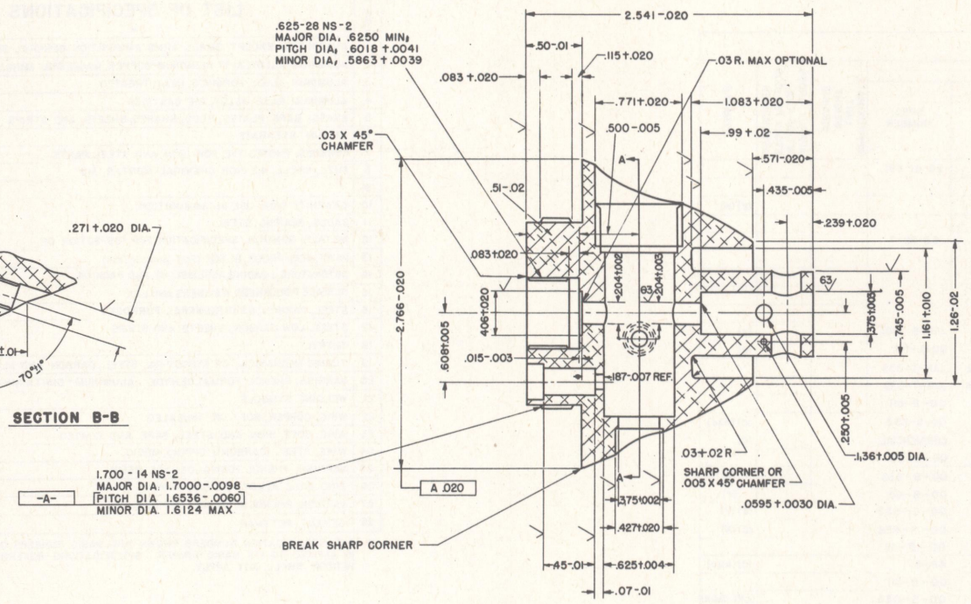
D

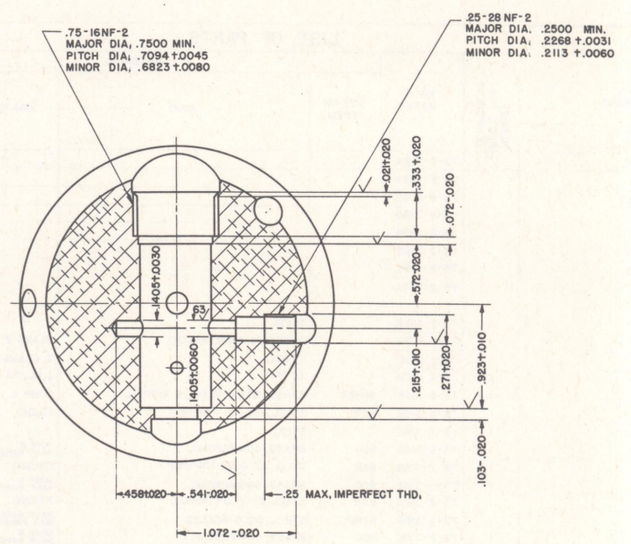
ORDNANCE DEPT., U.S.A.

HEAT TREATMENT AND FINAL FINISH

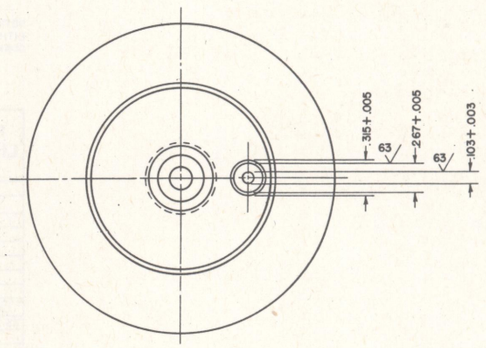


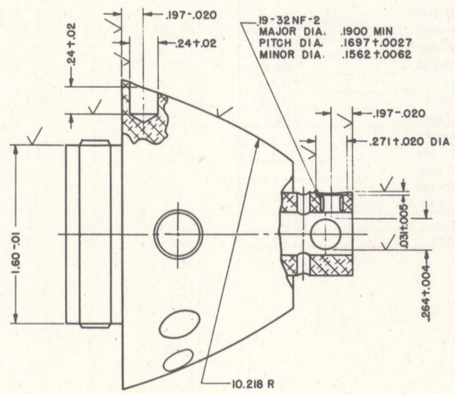
SECTION B-B





SECTION A-A

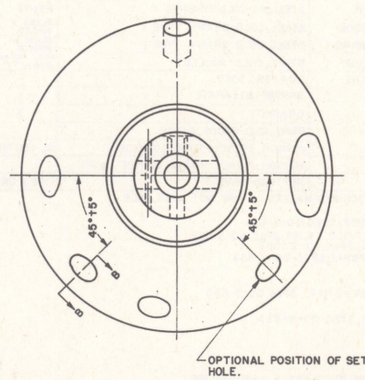




BODY 73-2-313A

ALUMINUM-BASE ALLOY, CLASS 2

FINISH √ TO BE AS DIE-CAST. WHEN MADE FROM ROD FINISH √ TO BE 125 √ OTHER SURFACES AS SPECIFIED



NOTICE:- THIS DRAWING SHALL NOT BE USED NOR REPRODUCED EITHER WHOLLY OR IN PART EXCEPT WHEN AUTHORIZED IN CONNECTION WITH UNITED STATES GOVERNMENT PROCUREMENT.

FUZE, POINT DETONATING, M8 & M9 DETAILS

OCT 21, 1949	CLASS	DIVISION	DRAWING	FILE
REVISIONS	73	2	313	

TOLERANCE ON DIMENSIONS NOT OTHERWISE SPECIFIED
DECIMAL ±
FRACTIONAL ±
ANGULAR ±

D'FTSMAN	TRACER	ENGINEER
	A.K.	
CHECKER S.G.	S.G.	ENGINEER H. ROBERTSON CORP.

DRG. PERTAINS TO
73-2-311
73-2-312

SUBMITTED:- C. F. Tritschler
ASSM. DES. ENG., ORD. DEPT., U. S. A.

EXAMINED:-
ORD. ENG., ORD. DEPT., U. S. A.

APPROVED BY ORDER OF THE CHIEF OF ORDNANCE:- C. R. Dutton
COL. ORD. DEPT., U. S. A.

D

ORDNANCE DEPT., U. S. A.

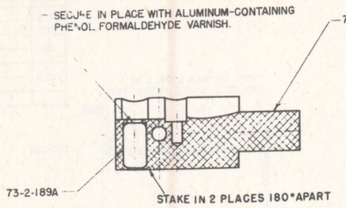
SUPERSEDES C8-11-330 WO/C, OCT 21, 1949

REMOVE ALL BURRS

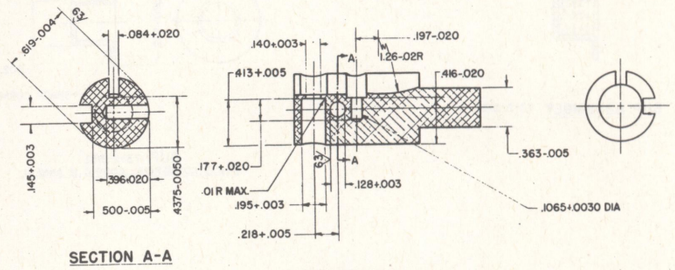
SCALE INCHES, 2/1

HEAT TREATM .NT AND FINAL FINISH

SEQUE IN PLACE WITH ALUMINUM-CONTAINING PHE'OL. FORMALDEHYDE VARNISH.

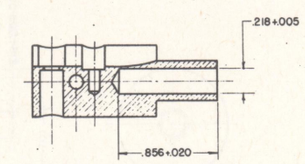


SLIDER ASSEMBLY 73-2-314A1

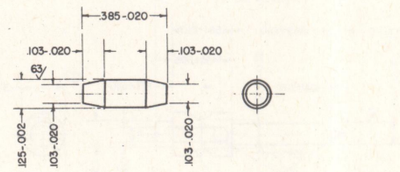


SECTION A-A

SLIDER 73-2-314A1
ALUMINUM ALLOY, ROD, CONDITION T
125/ ALL OVER EXCEPT AS NOTED.



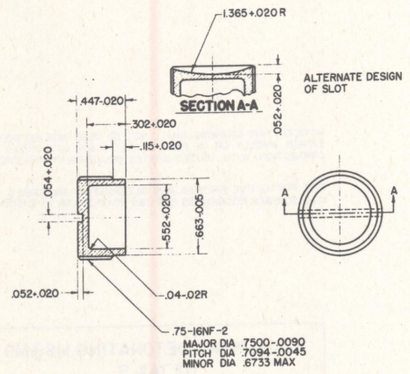
SLIDER (ALTERNATE) 73-2-314C
COMMERCIAL BRASS, COMPOSITION B, HALF HARD
FOR FURTHER INFORMATION SEE 73-2-314 B



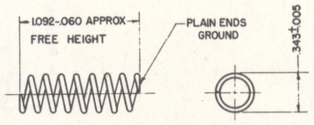
PIN, LOCK 73-2-314D1
BRASS, COMMERCIAL, COMPOSITION B, HALF HARD
125/ ALL OVER EXCEPT AS NOTED.

PHYSICAL PROPERTIES

Y.P.	
T.S.	
EL. 2	
RED.	
BR.	
ROCK.	



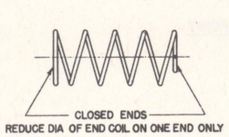
PLUG 73-2-314E1
BRASS, COMMERCIAL, COMPOSITION B, HALF HARD
FINISH ALL OVER 125/

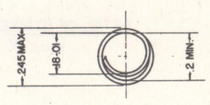


ADVISORY DATA (MAY VARY TO MEET REQ.)
A- DIA. OF WIRE = .047 INCH.
B- TOTAL NO. OF COILS = 8

REQUIREMENTS:
A- SOLID HEIGHT NOT OVER .43 INCH
B- RIGHT OR LEFT HAND WIND
C- SEASON THOROUGHLY AFTER WINDING
D- TREAT TO REMOVE EMBRITTLEMENT WITHIN 24 HRS. AFTER PLATING
E- LOAD AT .718 INCH = 9 LBS ± 1/2 LBS
F- LOAD APPLIES AFTER SEASONING, PLATING AND TREATMENT TO REMOVE EMBRITTLEMENT

SPRING 73-2-314F1
WIRE, STEEL (CARBON), SPRING, MUSIC, COMPOSITION A





REQUIREMENTS:
A- SOLID HEIGHT NOT OVER 1 INCH
B- LEFT HAND WIND
C- SEASON THOROUGHLY AFTER WINDING
D- TREAT TO REMOVE EMBRITTLEMENT WITHIN 24 HRS AFTER WINDING
E- LOAD AT 1.4 INCH = 7 OZ ± 5 OZ
F- LOAD AT ASSEMBLED HEIGHT 2.9 INCH = 4.5 OZ ± 5 OZ (OCCASIONAL CHECK WILL BE MADE AFTER COMPRESSION FOR AT LEAST 24 HRS AT THE ASSEMBED HEIGHT)
G- LOADS APPLY AFTER SEASONING, PLATING AND TREATMENT TO REMOVE EMBRITTLEMENT.

ADVISORY DATA (MAY VARY TO MEET REQUIREMENTS)
A- DIAMETER OF WIRE = .014 INCH
B- TOTAL NUMBER OF COILS = 6
C- NUMBER OF ACTIVE COILS = 4
D- ADJUST FREE HEIGHT TO MEET LOAD REQUIREMENTS
E- SUGGESTED TRIAL FREE HEIGHT = .55 INCH
F- SEASON BY HEATING TO 500°F FOR 30 MINUTES TO REMOVE EMBRITTLEMENT, HEAT TO 300°F FOR AT LEAST 30 MINUTES AS SOON AFTER PLATING AS PRACTICABLE

SPRING, SET BACK PIN 73-2-314G
WIRE, STEEL (CARBON), SPRING, MUSIC, COMPOSITION A

NOTICE: THIS DRAWING SHALL NOT BE USED NOR REPRODUCED EITHER WHOLLY OR IN PART EXCEPT WHEN AUTHORIZED IN CONNECTION WITH UNITED STATES GOVERNMENT PROCUREMENT.

FOR ALTERNATIVE MATERIALS AND PROTECTIVE FINISHES AND SURFACE ROUGHNESS, SEE DWG 73-2-311A OR 73-2-312A.

FUZE, POINT DETONATING, M8 & M9 DETAILS

OCT 21, 1949	CLASS	DIVISION	DRAWING	FILE
REVISIONS	73	2	314	
1 3-10-50				

TOLERANCE ON DIMENSIONS NOT OTHERWISE SPECIFIED
DECIMAL ±
FRACTIONAL ±
ANGULAR ±

D'FTSMAN	TRACER	ENGINEER
	S.R.	A.F.

CHECKER	ENGINEER
S.G.	H. ROBERTSON C.W.O.

DRG. PERTAINS TO
73-2-311
73-2-312

SUBMITTED:-
A. F. Teitschied
AMM. DES. ENG. ORD. DEPT. U.S.A.

EXAMINED:-
M. M. Graham
ORD. ENG. ORD. DEPT. U.S.A.

APPROVED BY ORDER OF THE CHIEF OF ORDNANCE:-
C. R. Dutton
COL., ORD. DEPT. U.S.A.

D

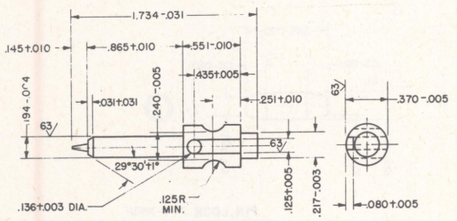
ORDNANCE DEPT. U.S.A.

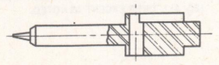
SUPERSEDES A16-11-36, E16-11-37, E8-11-104, E16-11-30, A16-11-31 W/O/C, OCT 21, 1949

SCALE, INCHES 2/1 4/1

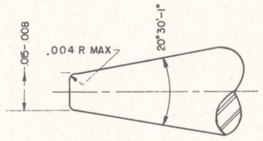
HEAT TREATMENT AND FINAL FINISH

PHYSICAL PROPERTIES	
Y.P.	
T.S.	
EL. 2	
RED.	
BR.	
ROCK.	

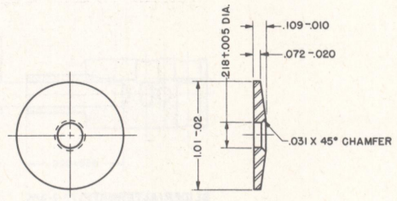




STRIKER 73-2-315A1
STEEL, AS-COLD-FINISHED, FS1117
125/ ALL OVER EXCEPT AS NOTED.

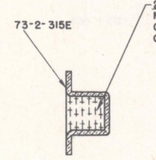


DETAIL OF STRIKER POINT
SCALE 40/1

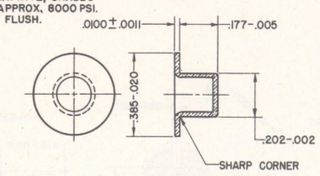


HEAD, STRIKER 73-2-3158
STEEL, AS-COLD-FINISHED, FS1010
FINISH ALL OVER 125/

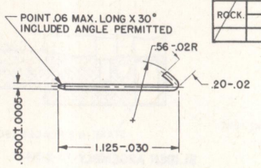
CHARGE, RELAY 73-2-315D
2 GRAINS (129.6 MG) APPROX, TETRYL, GRADE I, CLASS d
MAY CONTAIN NOT MORE THAN 2% GRAPHITE, GRADE I
OR BARIUM STEARATE. PRESS AT APPROX. 8000 PSI.
CHARGE TO BE FLUSH TO .01 BELOW FLUSH.



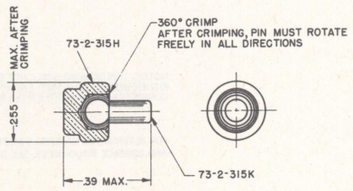
CUP ASSEMBLY 73-2-315C



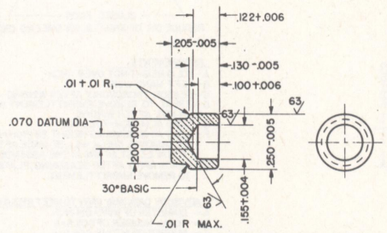
CUP 73-2-315E
BRASS, COMMERCIAL, COMP C, B ANNEAL.



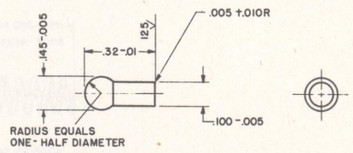
WIRE, SHEAR 73-2-315F1
WIRE, COPPER, SOFT



SET-BACK PIN ASSEMBLY 73-2-315G



SOCKET, SET-BACK PIN 73-2-315H1
COMMERCIAL BRASS, COMP. B, HALF-HARD
125/ ALL OVER EXCEPT AS NOTED.



PIN SET-BACK 73-2-315K1
STEEL, AS-COLD-FINISHED, FS-1020
63/ ALL OVER EXCEPT AS NOTED.

NOTICE:- THIS DRAWING SHALL NOT BE USED NOR REPRODUCED EITHER WHOLLY OR IN PART EXCEPT WHEN AUTHORIZED IN CONNECTION WITH UNITED STATES GOVERNMENT PROCUREMENT.

FOR PROTECTIVE FINISHES AND ALTERNATIVE MATERIALS AND SURFACE ROUGHNESS SEE DWG 73-2-311A OR 73-2-312A.

SUPERSEDES A8-11-105, A8-11-106, A8-11-107, A16-11-33, A16-11-38, E8-11-328 WO/C, OCT 21, 1949

SCALE INCHES 2/1; 4/1

FUZE, POINT DETONATING, M8 & M9 DETAILS

OCT 21, 1949

REVISIONS	
1	3-10-50

DRG. PERTAINS TO
73-2-311
73-2-312

CLASS	DIVISION	DRAWING	FILE
73	2	315	

TOLERANCE ON DIMENSIONS NOT OTHERWISE SPECIFIED
DECIMAL ±
FRACTIONAL ±
ANGULAR ±

D'FTSMAN	TRACER	ENGINEER
	A.K.	GMP
CHECKER		ENGINEER
AGS	SS	H. ROBERTSON CORP.

SUBMITTED:-
A.F. Twitchell
AMM. DES. ENG, ORD. DEPT., U.S.A.

EXAMINED:-
ORD. ENG, ORD. DEPT., U.S.A.

APPROVED BY ORDER OF THE CHIEF OF ORDNANCE:-
C.R. Dutton
COL., ORD. DEPT., U.S.A.

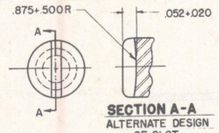
D

ORDNANCE DEPT., U.S.A.

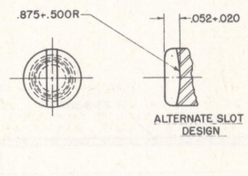
HEAT TREATMENT AND FINAL FINISH

PHYSICAL PROPERTIES

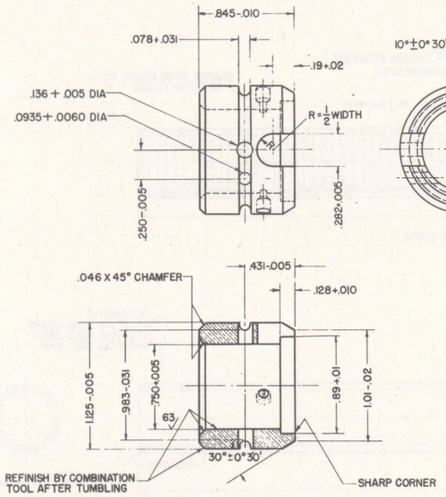
Y.P.	
T.S.	
EL. 2	
RED	
BR	
ROCK	



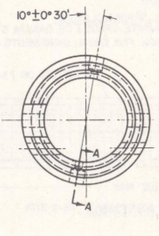
SCREW, SET 73-2-316A1
STEEL, AS-COLD-FINISHED, FS1117
125/ ALL OVER EXCEPT AS NOTED.

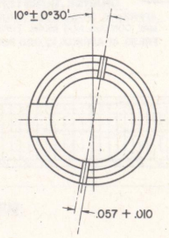


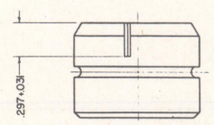
SCREW, SET (ALTERNATE) 73-2-316B1
STEEL, AS-COLD-FINISHED, FS1117
125/ ALL OVER EXCEPT AS NOTED.



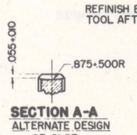
NOTE: REMOVE BURRS BY TUMBLING AS SPECIFIED IN THE SPECIFICATION OF THE FUZE



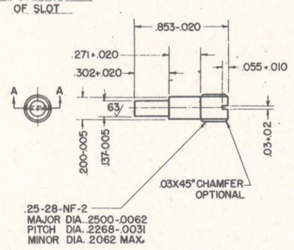




VIEW SHOWING ALTERNATE TO SECTION A-A

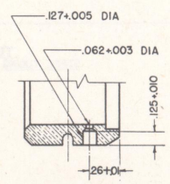


SECTION A-A
ALTERNATE DESIGN OF SLOT

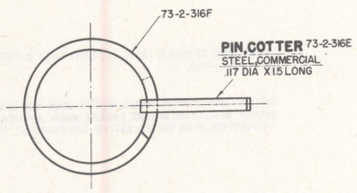


SCREW GUIDE 73-2-316H1
COMMERCIAL BRASS COMP B, HALF HARD
125/ ALL OVER EXCEPT AS NOTED.

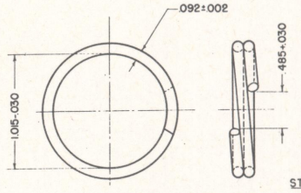
RETAINER 73-2-316C1
COMMERCIAL BRASS COMP B HALF HARD
125/ ALL OVER EXCEPT AS NOTED.



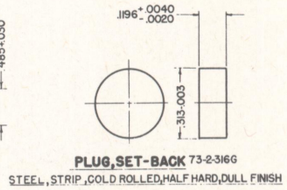
SECTION A-A



RING AND PIN ASSEMBLY 73-2-316D



RING, SAFETY PIN 73-2-316F
STEEL WIRE, TYPE I, WD 1010



PLUG, SET-BACK 73-2-316G
STEEL, STRIP, COLD ROLLED, HALF HARD, DULL FINISH

NOTICE: THIS DRAWING SHALL NOT BE USED NOR REPRODUCED EITHER WHOLLY OR IN PART EXCEPT WHEN AUTHORIZED IN CONNECTION WITH UNITED STATES GOVERNMENT PROCUREMENT.

FOR ALTERNATIVE MATERIALS AND PROTECTIVE FINISHES AND SURFACE ROUGHNESS SEE DWG 73-2-311A OR 73-2-312A.

FUZE, POINT DETONATING, M8 & M9 DETAILS

OCT 21, 1949	CLASS	DIVISION	DRAWING	FILE
REVISIONS	73	2	316	
1 3-10-50				

TOLERANCE ON DIMENSIONS NOT OTHERWISE SPECIFIED
DECIMAL ±
FRACTIONAL ±
ANGULAR ±

D'FTSMAN | TRACER D.W. | ENGINEER

CHECKER | ENGINEER

DRG. PERTAINS TO
73-2-311
73-2-312

SUBMITTED:
A. J. Teitschied
AMM. DES. ENG. ORD. DEPT. U.S.A.

EXAMINED:
ORD. ENG. ORD. DEPT. U.S.A.

APPROVED BY ORDER OF THE CHIEF OF ORDNANCE:
C. R. Dutton
COL. ORD. DEPT. U.S.A.

D

ORDNANCE DEPT., U.S.A.

SCALE: 2/1

SUPERSEDES A8-11-103, A8-11-205, A16-11-18, A16-11-23, A16-11-34, B8-11-329 WO/C, OCT 21, 1949

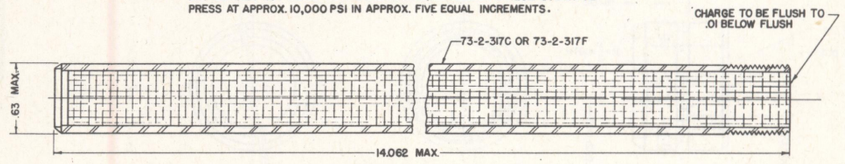
HEAT TREATMENT AND FINAL FINISH

PHYSICAL PROPERTIES

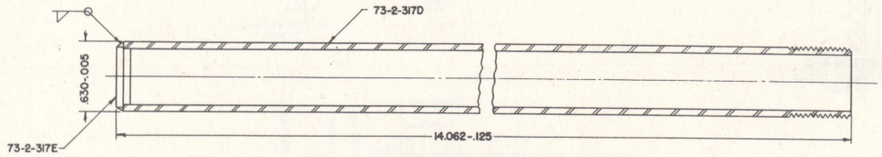
Y.P.	
T.S.	
EL. 2	
RED.	
BR.	
ROCK.	

CHARGE, BURSTER 73-2-317B

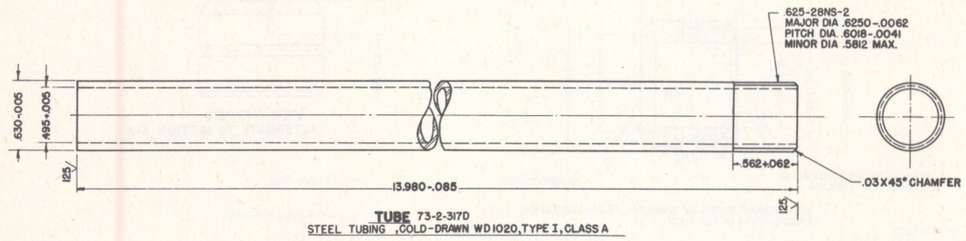
APPROX 65 GRAMS (1003 GRAINS) TETRYL, GRADE I, CLASS d
MAY CONTAIN NOT MORE THAN 2% GRAPHITE, GRADE I OR BARIUM STEARATE.
PRESS AT APPROX. 10,000 PSI IN APPROX. FIVE EQUAL INCREMENTS.



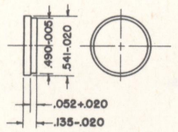
BURSTER ASSEMBLY 73-2-317A



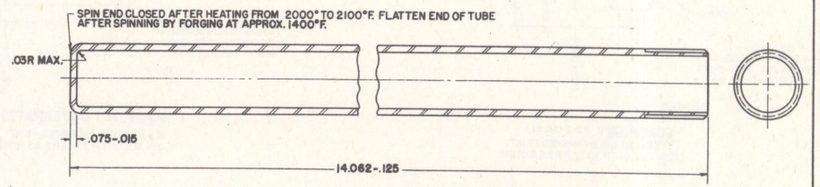
BURSTER TUBE ASSEMBLY 73-2-317C
COAT INTERIOR AND EXTERIOR SURFACES WITH PHENOLIC VARNISH, BAKED (LIGHT COATING ON THREADS)



TUBE 73-2-317D
STEEL TUBING, COLD-DRAWN WD 1020, TYPE I, CLASS A



PLUG, BURSTER TUBE 73-2-317E
STEEL, COLD-ROLLED, FS 1020



TUBE, BURSTER (ALTERNATE) 73-2-317F
STEEL TUBING, COLD-DRAWN, WD 1020, TYPE I, CLASS A
FOR ALL OTHER INFORMATION SEE 73-2-317D AND 73-2-317C

FOR WELDING SYMBOLS AND ALTERNATIVE MATERIALS SEE 73-2-311A

NOTICE: THIS DRAWING SHALL NOT BE USED NOR REPRODUCED EITHER WHOLLY OR IN PART EXCEPT WHEN AUTHORIZED IN CONNECTION WITH UNITED STATES GOVERNMENT PROCUREMENT.

SUPERSEDES E-16-11-39 WC/C, OCT 21, 1949

REMOVE ALL BURRS

SCALE, INCHES 2

FUZE, POINT DETONATING, M8 DETAILS

OCT 21, 1949
REVISIONS

ORG. PERTAINS TO 73-2-311

CLASS	DIVISION	DRAWING	FILE
73	2	317	

TOLERANCE ON DIMENSIONS NOT OTHERWISE SPECIFIED
DECIMAL ±
FRACTIONAL ±
ANGULAR ±

D'FTSMAN	TRACER	ENGINEER
	S.F.S.	
CHECKER		ENGINEER

SUBMITTED:
A. H. Teitsheid
AMM. DES. ENG. ORD. DEPT., U. S. A.

EXAMINED:
ORD. ENG. ORD. DEPT., U. S. A.

APPROVED BY ORDER OF THE CHIEF OF ORDNANCE:
COL. ORD. DEPT., U. S. A.

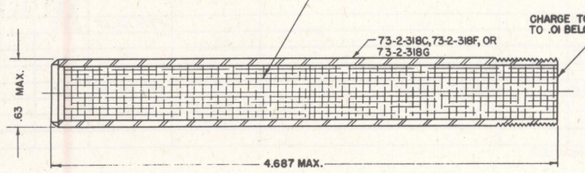
D

ORDNANCE DEPT., U. S. A.

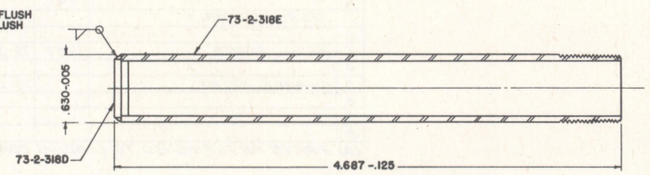
HEAT TREATMENT AND FINAL FINISH

PHYSICAL PROPERTIES	
Y.R.	
T.S.	
EL. 2	
RED.	
BR.	
ROCK.	

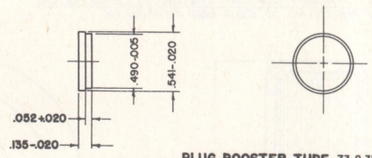
CHARGE, BOOSTER 73-2-318B
APPROX. 22.5 GRAMS (347 GRAINS) TETRYL, GRADE I, CLASS A
MAY CONTAIN NOT MORE THAN 2% GRAPHITE, GRADE I, OR BARIUM STEARATE
PRESS AT APPROX. 10,000 PSI IN APPROX. TWO EQUAL INCREMENTS



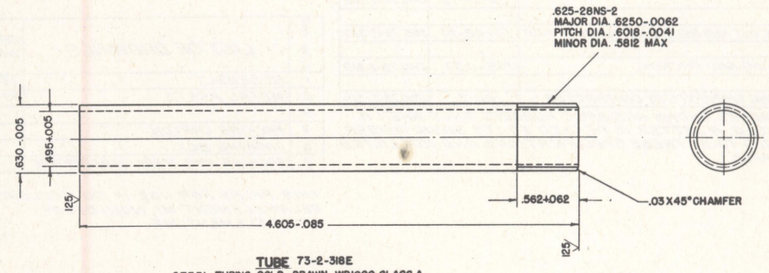
BOOSTER ASSEMBLY 73-2-318A



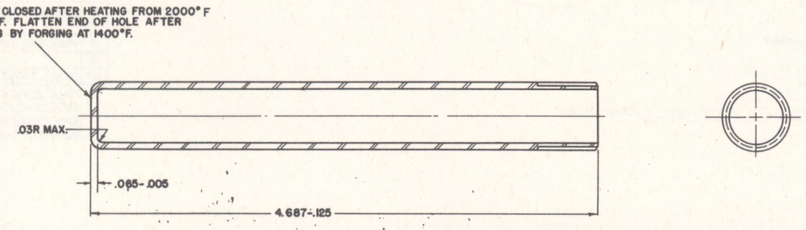
BOOSTER TUBE ASSEMBLY 73-2-318C
COAT INTERIOR AND EXTERIOR SURFACES WITH PHENOLIC VARNISH, BAKED (LIGHT COATING ON THREADS)



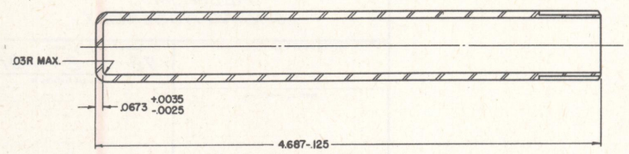
PLUG, BOOSTER TUBE 73-2-318D
STEEL, COLD-ROLLED, FS 1010



TUBE 73-2-318E
STEEL TUBING, COLD-DRAWN, WD1020, CLASS A



TUBE, BOOSTER (ALTERNATE) 73-2-318F
STEEL TUBING, COLD-DRAWN, WD1020, TYPE I, CLASS A
FOR ALL OTHER INFORMATION SEE 73-2-318E AND 73-2-318C



TUBE, BOOSTER (ALTERNATE) 73-2-318G
STEEL, COLD-ROLLED, STRIP, DEEP DRAWING QUALITY
FOR ALL OTHER INFORMATION SEE 73-2-318E AND 73-2-318C

FOR WELDING SYMBOLS AND ALTERNATIVE MATERIALS SEE 73-2-312 A

NOTICE: THIS DRAWING SHALL NOT BE USED NOR REPRODUCED EITHER WHOLLY OR IN PART EXCEPT WHEN AUTHORIZED IN CONNECTION WITH UNITED STATES GOVERNMENT PROCUREMENT.

FUZE, POINT DETONATING, M9 DETAILS

OCT 21, 1949 REVISIONS	CLASS	DIVISION	DRAWING	FILE
	73	2	318	

TOLERANCE ON DIMENSIONS NOT OTHERWISE SPECIFIED
DECIMAL ±
FRACTIONAL ±
° ANGULAR ±

D'PTSMAN	TRACER	ENGINEER
	S.F.	H. ROBERTSON CORP

CHECKER			ENGINEER
SW	G.A.	O.C.	SW

SUBMITTED:
A. F. Teitscheid
AMM, DES. ENG. ORD. DEPT., U. S. A.

EXAMINED:
ORD. ENG. ORD. DEPT., U. S. A.

APPROVED BY ORDER OF THE CHIEF OF ORDNANCE:
C. M. Dutton
COL. ORD. DEPT., U. S. A.

DRG. PERTAINS TO 73-2-312

D

ORDNANCE DEPT., U. S. A.

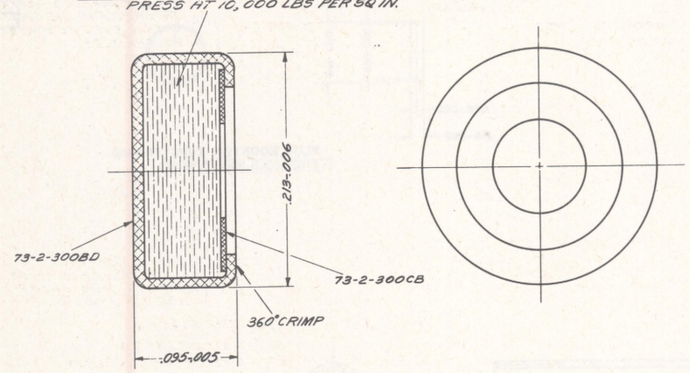
SUPERSEDES E8-11-54 W.O/C, OCT 21, 1949

REMOVE ALL BURRS

SCALE, INCHES 2/1

CL & DIV D

CHARGE, RELAY 73-2-319B
1.54-11 GRAINS (100-7 MILLIGRAMS) LEAD AZIDE
PRESS HT 10,000 LBS PER SQ IN.



RELAY ASSEMBLY 73-2-319A

LIST OF PARTS

LINE NO.	NAME OF PART	NUMBER REQD PER COMPONENT	PIECE MARK	MATERIAL: SIZE OR FORM	MATERIAL: KIND	MATERIAL: GRADE	MATERIAL: SPEC NUMBER	APPROXIMATE UNIT WEIGHT (GRAINS)	APPROX GROSS WT. OF RAW STOCK PER 1000 ASSEMBLIES	REMARKS
1	RELAY ASSEMBLY		73-2-319A				PXS 1237	2.30		
2										
3	METAL PARTS	1 SET	73-2-300					.45		(a)
4										
5	CHARGE, RELAY	1	73-2-319B		LEAD AZIDE		50-13-12	1.85		
6										
7										
8										

(a) PARTS AS FURNISHED TO LOADING CONTRACTOR.

LINE NO.	LIST OF SPECIFICATIONS	SPEC NUMBER *	REQUIRED BY
1	AMMUNITION, EXCEPT SMALL ARMS AMM, GENERAL SPEC FOR	50-0-1	DWG 73-2-319
2			
3			
4	LEAD AZIDE	50-13-12	DWG 73-2-319
5			
6	PRIMER PERCUSSION ELEMENTS, DET AND RELAYS, METAL PARTS FOR	50-48-14	DWG 73-2-319
7			
8	RELAYS, LOADING, ASSEMBLING AND PACKING	PXS-1237	DWG 73-2-319
9			
10	STANDARD SPEC FOR MARKING SHIPMENTS BY CONTRACTOR	100-2	DWG 73-2-319

* THE SPECIFICATION NUMBERS SHOWN ARE BASIC NUMBERS ONLY. WHEN A SPECIFICATION IS REVISED, A LETTER IS AFFIXED TO ITS BASIC NUMBER. SPECIFICATIONS REFERRED TO IN THESE SPECIFICATIONS AND NOT LISTED HEREON, SHALL NOT APPLY.

LINE NO.	LIST OF DRAWINGS	DRAWING NUMBER
1	ASSEMBLY	73-2-319
2	METAL PARTS	73-2-300
3		
4	PACKING CARTON	
5	PACKING BOX	
6	PACKING AND MARKING OF CARTON	

THIS RELAY FOR USE IN THE FOLLOWING:-
DELAY ELEMENT, M1, NON-DELAY.
DELAY ELEMENT, M2.

.5 INCH

RELAY, M7.
LOADING ASSEMBLY.

HEAT TREATMENT & PROTECTIVE FINISH

PHYSICAL PROPERTIES

ORIGINAL DATE OF DRAW. SEP 30, 1949.

REVISIONS

CLASS	DIVISION	DRAWING
73	2	319

DRAWING PERTAINS TO

WEIGHT — DO NOT APPLY PART NO.

SCALE — DO (As Specified)

TOLERANCES OR DIMENSIONS (Unless otherwise specified)

SUBMITTED
ORD ENGR

EXAMINED
COL.

APPROVED
COL.

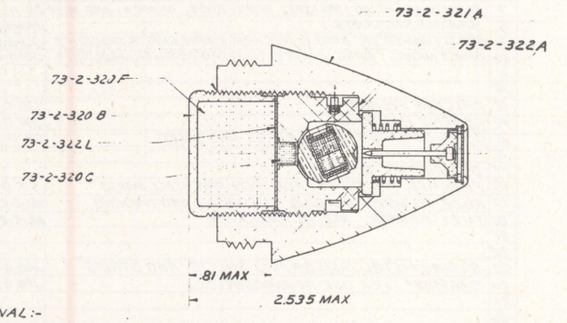
D

ORDNANCE DEPT
U.S. ARMY

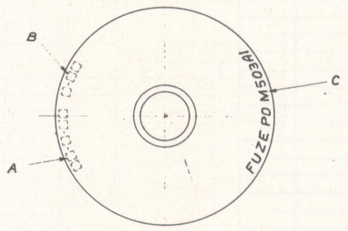
CLASS & DIV. E

LINE NO	LIST OF DRAWINGS	DRAWING NUMBER
1	ASSEMBLY	73-2-320
2	LIST OF PARTS AND LIST OF SPEC	73-2-320A
3	DETAILS	73-2-321
4	DETAILS	73-2-322
5	DETONATOR ASSEMBLY, M 42	73-2-323
6	FIBER CONTAINER	76-1-1157
7	PACKING BOX	76-1-886
8		

SECURE BY STAKING.

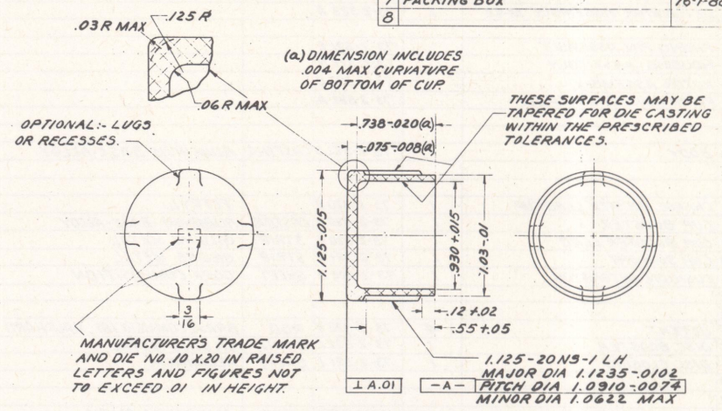


OPTIONAL:-
COAT BOOSTER LEAD CUP ASSEMBLY FOR A DISTANCE OF $\frac{1}{8}$ INCH UNDER FLANGE WITH PETTMAN CEMENT, TYPE A.



STAMP AS INDICATED WITH LETTERS AND FIGURES $\frac{1}{8}$ INCH HIGH AND .01 DEEP. LOCATE STAMPING APPROX $\frac{1}{8}$ INCH ABOVE SHOULDER.
A - LOADERS LOT NUMBER.
B - DATE (MONTH AND YEAR) LOADED.
C - DESIGNATION OF FUZE.

ASSEMBLY 73-2-320A3

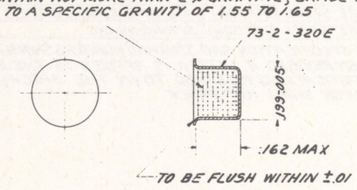


CUP, BOOSTER 73-2-320B1

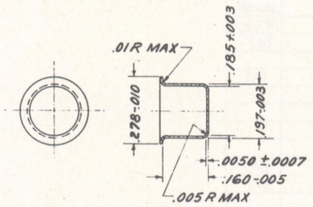
ALUMINUM-BASE-ALLOY DIE CASTING, CLASS 2
MUST MEET LOAD REQUIREMENT GIVEN IN SPECIFICATION.
FINISH 125

CHARGE, BOOSTER LEAD CUP 73-2-320D

APPROX 1.93 GRAINS (125 MILLIGRAMS) TETRYL, GRADE I, CLASS a
MAY CONTAIN NOT MORE THAN 2 % GRAPHITE, GRADE I OR II
PRESS TO A SPECIFIC GRAVITY OF 1.55 TO 1.65

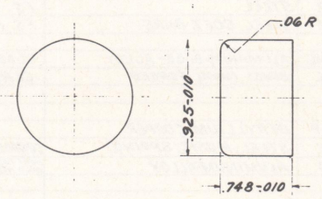


BOOSTER LEAD CUP ASSEMBLY 73-2-320C



CUP, BOOSTER LEAD 73-2-320E

GILDING METAL



PELLET, BOOSTER 73-2-320F3

197-11. GRAINS (12.76-.75 GRAMS) TETRYL, GRADE I, CLASS a
SHALL CONTAIN NOT MORE THAN 2 % TOTAL BINDER-LUBRICANT CONSISTING OF GRAPHITE, BARIUM STEARATE AND/OR CALCIUM STEARATE IN ANY PROPORTION.
ADVISORY: NOT LESS THAN 0.25 % GRAPHITE, GRADE I OR II.
ADVISORY DATA:- PELLETING PRESSURE 10,000 LBS. PER SQUARE INCH. SPECIFIC GRAVITY 1.45 TO 1.60.

NOTICE:- THIS DRAWING SHALL NOT BE USED OR REPRODUCED EITHER WHOLLY OR IN PART EXCEPT AS AUTHORIZED IN CONNECTION WITH UNITED STATES GOVERNMENT PROCUREMENT.

NO	DESCRIPTION	DATE	APPROVAL
3	ECO 16360	8-11-50	
2	ECO 16304	7-6-50	
1	ECO 16153	5-17-50	

REVISIONS

0 1 2 3 4 5 IN.
0 1 2 IN.

PHYSICAL PROPERTIES
NEXT ASSY | USED ON | APPLICATION | DO NOT | APPLY PART NO. | DO | NOT SPECIFIED
UNLESS OTHERWISE SPECIFIED DIMENSIONS ARE IN INCHES
TOLERANCES ON DECIMALS | ANGLES | FRACTIONS
MATERIAL
HEAT TREATMENT
FINAL PROTECTIVE FINISH

ORIGINAL DATE OF DRAWING AUG 29, 1949
DRAFTSMAN S.G.J. | CHECKED
TRACER C.B.P. | CHECKED
ENGINEER [illegible] | ENGINEER [illegible]
SUBMITTED [illegible] COL, ORD DEPT
APPROVED BY ORDER OF THE CHIEF OF ORDNANCE [illegible] COL, ORD DEPT

FUZE, PD, M503A1
ASSEMBLY AND DETAILS.

ORDNANCE DEPT
DEPT OF THE ARMY

SCALE | UNIT WT.
NO. 73-2-320
SIZE E

CLASS & DIV. E

LIST OF PARTS

LINE NO.	NAME OF PART	NUMBER REQD PER COMPONENT	PIECE-MARK	MATERIAL: SIZE OR FORM	MATERIAL: KIND	MATERIAL: GRADE	MATERIAL: SPECIFICATION NUMBER	APPROX UNIT WEIGHT (GRAMS)	APPROX WEIGHT OF RAW STOCK PER 1000 ASSEMBLIES		REMARKS
1	ASSEMBLY		73-2-320A				50-17-44	.37 LB			
2											
3	BODY ASSEMBLY		73-2-321A					1602.			
4	BOOSTER LEAD CUP ASSEMBLY		73-2-320C					4.44			
5											
6	DETONATOR ASSEMBLY, M42	1	73-2-323A					18.12			
7											
8	FIRING PIN ASSEMBLY		73-2-321E					10.			
9	HOUSING ASSEMBLY		73-2-322N								
10	ROTOR ASSEMBLY		73-2-322B					157.22			
11	ROTOR HOUSING ASSEMBLY		73-2-322A					504.72			
12											
13											
14	BODY	1	73-2-321B	CASTING	ALUMINUM-BASE-ALLOY	CLASS 2	QQ-A-591	1580.			(a)
15											
16											
17	CHARGE, BOOSTER LEAD CUP	1	73-2-320D		TETRYL	I, CLASS a	JAN-T-339	1.93			
18	CUP, BOOSTER	1	73-2-320B	CASTING	ALUMINUM-BASE-ALLOY	CLASS 2	QQ-A-591	164.			
19	CUP, BOOSTER LEAD	1	73-2-320E	STRIP	GILDING METAL		JAN-G-439	2.51			
20	CUP, SUPPORT	1	73-2-321H	STRIP	GILDING METAL		JAN-G-439	1.			
21	CUSHION, DETONATOR	1	73-2-322M	SHEET	CORK-COMPOSITION	CLASS 1	HH-C-576	.1			(c)
22											
23											
24	DETENT	4	73-2-322H	ROD	BRASS, COMMERCIAL, HALF HARD	COMPOSITION B	QQ-B-611	5.5			
25	DISC, BOOSTER	1	73-2-322L	STRIP	GILDING METAL		JAN-G-439	19.1			
26	DISC, CLOSING	1	73-2-321L	SHEET	ALUMINUM	CLASS A	QQ-A-561	.7			
27											
28											
29	HEAD, FIRING PIN	1	73-2-321G	ROD	ALUMINUM-ALLOY	HEAT TREATED AND COLD WORKED / HEAT TREATED AND COLD WORKED	AXS-1318	7.5			(b)
30	HOUSING		73-2-322G	ROD	ALUMINUM-ALLOY		AXS-1318	320.			(b)
31											
32											
33											
34											
35	PELLET, BOOSTER	1	73-2-320F		TETRYL	I, CLASS a	JAN-T-339	192.			~~(c)~~
36	PIN, FIRING	1	73-2-321F	BAR	STEEL	FS 1117	QQ-S-633	2.5			(d)(e)
37	PIN, FIRING (ALTERNATIVE)		73-2-321M	WIRE	STEEL, SOFT, BARE	FS 1010	QQ-W-461	2.5			(d)
38											
39	RESTRAINER, ROTOR	1	73-2-321C	CASTING	ALUMINUM-BASE-ALLOY	CLASS 2	QQ-A-591	51.			(a)
40	ROTOR	1	73-2-322C	BALL	BRASS, NAVAL, FORGED	CLASS A	QQ-B-636	139.			
41											
42											
43	SPRING, DETENT	1	73-2-322D	STRIP	BERYLLIUM COPPER		COMMERCIAL	4.5			
44	SPRING, ROTOR RESTRAINER	1	73-2-321D	WIRE	STEEL, MUSIC, SPRING	COMPOSITION A / HEAT TREATED AND C.D. WORKED	QQ-W-470	7.5			(f)
45	STOP, SPRING		73-2-322K	ROD	ALUMINUM-ALLOY		AXS-1318	1.			(b)
46											
47											
48	WASHER, CLOSING DISC	1	73-2-321K	STRIP	BRASS, COMMERCIAL, HARD	COMPOSITION C	QQ-B-611	2.8			(m)
49											
50											
51											
52					BARIUM STEARATE		JAN-B-366				
53					CALCIUM STEARATE		JAN-C-263				
54											
55					GRAPHITE	I OR II	JAN-G-155				~~(c)~~
56											
57					PETTMAN CEMENT	TYPE A	JAN-C-99				
58											
59					SHELLAC VARNISH, ORANGE	B MEDIUM BODY	TT-V-91				
60											
61											
62											
63											
64											

(a) ALTERNATIVE MATERIAL:- (k) ALUMINUM-ALLOY, ROD, HEAT TREATED AND COLD WORKED, SPEC AXS-1318, OR ALUMINUM-ALLOY, ROD, CONDITION T, SPEC QQ-A-354 OR ALUMINUM-ALLOY, ROD, CONDITION T, SPEC QQ-A-351.
(b) ALTERNATIVE MATERIAL :- (k) ALUMINUM-ALLOY, ROD, CONDITION T, SPEC QQ-A-354 OR ALUMINUM-ALLOY, ROD, CONDITION T, SPEC QQ-A-351.
(c) SPECIFICATION APPLIES EXCEPT FOR THICKNESS.
(d) PROTECTIVE FINISH, TYPE I, CLASS TS, TSC, RS OR RSC, SPEC 57-0-2.
(e) ALTERNATIVE MATERIAL :-(k) STEEL, AS-COLD-FINISHED, FS 1015 TO FS 1025, SPEC QQ-S-633.
(f) PROTECTIVE FINISH, TYPE I, CLASS TS OR TSC, SPEC 57-0-2.

(k) ALTERNATIVE MATERIALS ARE INTENDED TO BE USED ONLY WHEN PRESCRIBED MATERIALS ARE NOT AVAILABLE.

(m) ALTERNATIVE MATERIAL:-(k) STEEL, WD1010, COLD-ROLLED, TEMPER NO. 2 (HALF HARD) FINISH NO. 1 (DULL), SPEC 57-136.(d).

LIST OF SPECIFICATIONS AND STANDARDS

LINE NO.		SPEC OR STD NUMBER *	REQUIRED BY
1	ALUMINUM-ALLOY (AI-24) (ALUMINUM-COPPER-MAGNESIUM-MANGANESE)		
2	BARS, RODS, SHAPES, AND WIRE	QQ-A-354	DWG 73-2-322
3	ALUMINUM-BASE-ALLOY; DIE CASTING	QQ-A-591	DWG 73-2-321
4	ALUMINUM; PLATES AND SHEETS	QQ-A-561	DWG 73-2-321
5	ALUMINUM-ALLOY (AL-11); BARS AND RODS	AXS-1318	DWG 73-2-321
6	AMMUNITION, GENERAL SPECIFICATION FOR, EXCEPT SMALL ARMS AMMO	50-0-1	DWG 73-2-320
7	ALUMINUM-ALLOY (AL-T); BARS, RODS, SHAPES, AND WIRE	QQ-A-351	DWG 73-2-321
8	BARIUM STEARATE	JAN-B-366	DWG 73-2-320
9	BRASS, COMMERCIAL: BARS, PLATES, RODS, SHAPES, SHEETS AND STRIPS	QQ-B-611	DWG 73-2-322
10	BRASS, NAVAL: BARS, PLATES, RODS, SHAPES, SHEETS AND STRIPS	QQ-B-636	DWG 73-2-322
11			
12			
13	CALCIUM STEARATE	JAN-C-263	DWG 73-2-320
14	CEMENT, PETTMAN	JAN-C-99	DWG 73-2-320
15	CORK-COMPOSITION; GASKET AND SHEET	HH-C-576	DWG 73-2-322
16			
17	DETONATOR, M42		DWG 73-2-323
18	FINISHES, PROTECTIVE; FOR IRON AND STEEL PARTS	57-0-2	DWG 73-2-320A
19	FUZE, PD, M503 LOADING, ASSEMBLING AND PACKING	MIL-F-2150	DWG 73-2-320
20	FUZE, PD, M503 METAL PARTS FOR	MIL-F-2098	DWG 73-2-320
21			
22			
23	GILDING METAL (95/5 BRASS) SHEETS AND STRIPS	JAN-G-439	DWG 73-2-320
24	GRAPHITE (FOR USE IN AMMUNITION)	JAN-G-155	DWG 73-2-320
25			
26			
27	METALS, GENERAL SPECIFICATION FOR	QQ-M-151	QQ-A-561
28			
29	ORDNANCE FINISHES (SURFACE ROUGHNESS)	URAX6	DWG 73-2-320
30			
31			
32	PACKING AND MARKING FOR DOMESTIC SHIPMENTS OF INERT AMM, ETC	MIL-P-10025	DWG 73-2-320
33	STANDARD FOR DIMENSIONING AND TOLERANCING	30-1-7	DWG 73-2-320
34	STEEL, CARBON; BARS (GENERAL PURPOSE)	QQ-S-633	DWG 73-2-321
35	STEEL, CARBON AND ALLOY; SHEETS AND STRIPS	57-136	DWG 73-2-321
36	SURFACE ROUGHNESS WAVINESS AND LAY	MIL-STD-10	DWG 73-2-320
37	TETRYL	JAN-T-339	DWG 73-2-320
38			
39	VARNISH, SHELLAC	TT-V-91	DWG 73-2-322
40			
41	WIRE, STEEL (CARBON), BARE AND ZINC-COATED	QQ-W-461	DWG 73-2-322
42	WIRE, STEEL (CARBON), SPRING, MUSIC	QQ-W-470	DWG 73-2-321

* THE SPECIFICATION AND STANDARD NUMBERS SHOWN ARE BASIC NUMBERS ONLY. WHEN REVISED A LETTER IS AFFIXED TO THE BASIC NUMBER. SPECIFICATIONS REFERRED TO IN THE SPECIFICATIONS AND NOT LISTED HEREON SHALL NOT APPLY.

NOTICE :- THIS DRAWING SHALL NOT BE USED OR REPRODUCED EITHER WHOLLY OR IN PART, EXCEPT WHEN AUTHORIZED IN CONNECTION WITH UNITED STATES GOVERNMENT PROCUREMENT.

SYM	DESCRIPTION	DATE	APPROVAL
	REVISIONS		
3	ECO 16360	8-11-50	
2	ECO 16304	7-6-50	
1	ECO 16203	5-17-50	

PHYSICAL PROPERTIES — UP, FS, EL 2, RA, BH, Br

73-2-320 — HEAT ASSY — USED ON

APPLICATION

DO NOT APPLY PART NO.

DO AS SPECIFIED

UNLESS OTHERWISE SPECIFIED DIMENSIONS ARE IN INCHES
TOLERANCES ON DECIMALS ANGLES FRACTIONS
MATERIAL
HEAT TREATMENT
FINAL PROTECTIVE FINISH

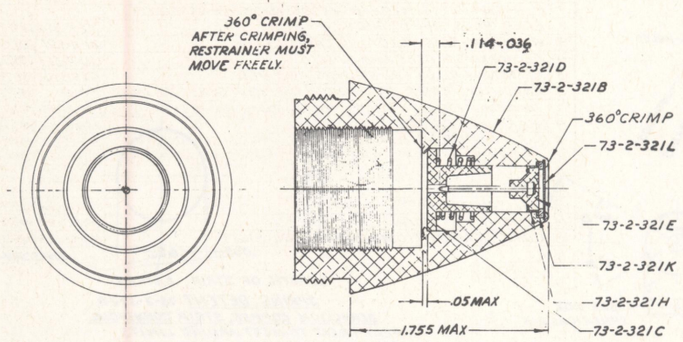
ORIGINAL DATE OF DRAWING AUG 29, 1949
DRAFTSMAN S.B.J. CHECKER
TRACER CHECKER
ENGINEER ENGINEER
SUBMITTED C.R. Sutton Col., ORD DEPT
APPROVED BY ORDER OF THE CHIEF OF ORDNANCE G.F. Hauna COL., ORD DEPT

FUZE, PD, M503A1
LIST OF PARTS AND LIST OF SPECIFICATIONS

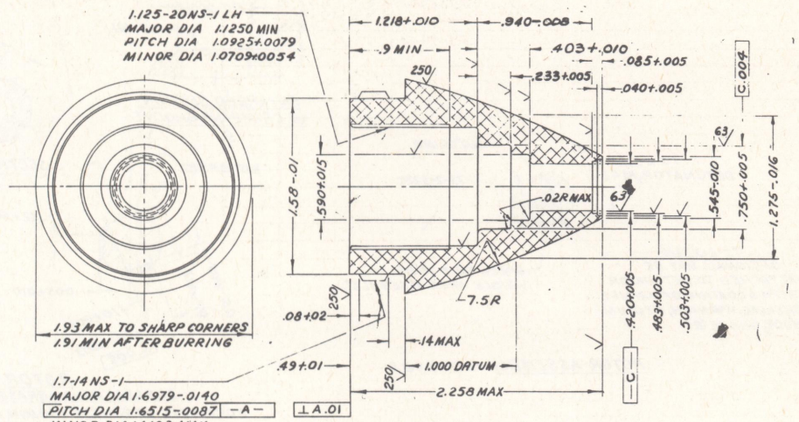
SCALE UNIT WT

ORDNANCE DEPT
DEPT OF THE ARMY

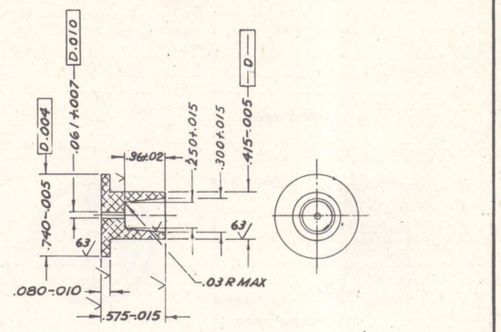
DWG SIZE E — 73-2-320A — SHEET OF



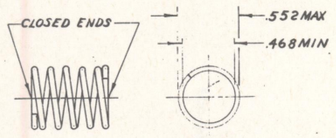
BODY ASSEMBLY 73-2-321A2



BODY 73-2-321B2
ALUMINUM-BASE-ALLOY, DIE CASTING, CLASS 2.
FINISH √ TO BE 125, OTHER SURFACES AS SPECIFIED.



RESTRAINER, ROTOR 73-2-321C2
ALUMINUM-BASE-ALLOY, DIE CASTING, CLASS 2.
FINISH √ TO BE 125, OTHER SURFACES AS SPECIFIED.



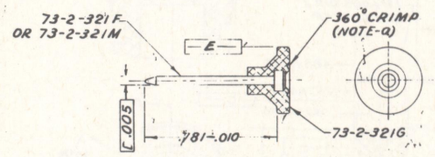
SPRING, ROTOR RESTRAINER 73-2-321D
STEEL, WIRE, MUSIC SPRING, COMPOSITION "A."

REQUIREMENTS

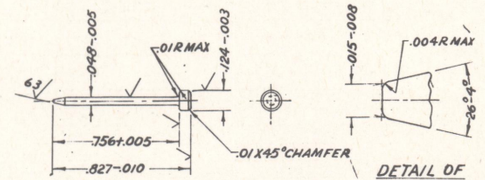
A-SOLID HEIGHT NOT OVER .17 INCH.
B-SEASON THOROUGHLY AFTER WINDING.
C-TREAT, TO REMOVE EMBRITTLEMENT, WITHIN 24 HOURS AFTER PLATING.
D-LOAD AT .18 INCH = 8.2 OZ MAX..
E-LOAD AT ASSEMBLED HEIGHT, .26 INCH = 5.6 OZ MIN (OCCASIONAL CHECK WILL BE MADE, AFTER COMPRESSION FOR AT LEAST 24 HOURS, AT THE ASSEMBLED HEIGHT).
F-LOADS APPLY AFTER SEASONING, PLATING AND TREATMENT TO REMOVE EMBRITTLEMENT.

ADVISORY DATA (MAY BE VARIED TO MEET REQUIREMENTS)

A-DIA OF WIRE = .022 INCH.
B-TOTAL NUMBER OF COILS = 6.
C-NUMBER OF ACTIVE COILS = 4.
D-ADJUST FREE HEIGHT TO MEET LOAD REQUIREMENTS. SUGGESTED TRIAL FREE HEIGHT = .69.
E-SEASON BY HEATING TO 500°F FOR 30 MINUTES.
F-TO REMOVE EMBRITTLEMENT, HEAT TO 300°F FOR AT LEAST 30 MINUTES AS SOON AFTER PLATING AS PRACTICABLE.

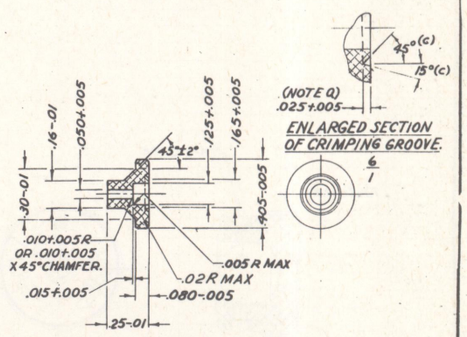


FIRING PIN ASSEMBLY 73-2-321E1
NOTE Q-FIRING PIN MUST BE TIGHT IN FIRING PIN HEAD



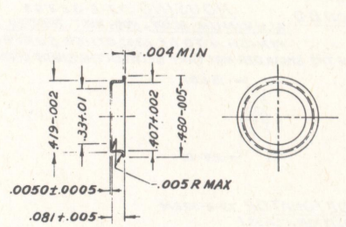
(b) PIN, FIRING 73-2-321F1
STEEL, BAR, AS COLD-FINISHED, FS 1117
FINISH √ TO BE 125, OTHER SURFACES AS SPECIFIED.

DETAIL OF PIN POINT
40
1

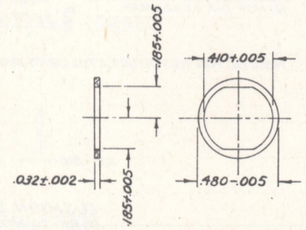


ENLARGED SECTION OF CRIMPING GROOVE.
6
1

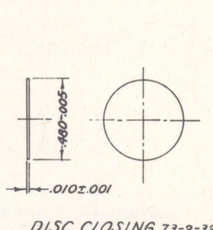
(b) HEAD, FIRING PIN 73-2-321G1
ALUMINUM-ALLOY, ROD, HEAT TREATED AND COLD WORKED.
FINISH 125
(b) MUST MEET ECCENTRICITY REQUIREMENT SPECIFIED ON FIRING PIN ASSEMBLY, PC MK 73-2-321E.
(c) MAY VARY TO GIVE SATISFACTORY FIRING PIN ASSEMBLY.



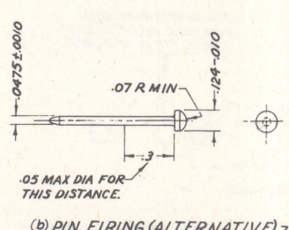
CUP, SUPPORT 73-2-321H
GILDING METAL
HEAT TREAT TO MEET THE FOLLOWING REQUIREMENTS:
MUST SUPPORT LOAD OF 40 LBS APPLIED ON 405 DIA PUNCH. MUST COLLAPSE UNDER LOAD OF 75 LBS.
FOR METHOD OF TEST, SEE SPECIFICATION.



WASHER, CLOSING DISC 73-2-321K
COMMERCIAL BRASS, STRIP, COMPOSITION C, HARD.



DISC, CLOSING 73-2-321L
ALUMINUM, CLASS "A"



(b) PIN, FIRING (ALTERNATIVE) 73-2-321M
WIRE, STEEL, FS1010, SOFT, BARE.
FOR FURTHER INFORMATION SEE 73-2-321F.

FOR PROTECTIVE FINISHES AND ALTERNATIVE MATERIALS SEE DWG 73-2-320A.

SCALES, INCHES, 2/1, 3/1.

NOTICE-THIS DRAWING SHALL NOT BE USED OR REPRODUCED EITHER WHOLLY OR IN PART EXCEPT WHEN AUTHORIZED IN CONNECTION WITH UNITED STATES GOVERNMENT PROCUREMENT.

SYM	DESCRIPTION	DATE	APPROVAL
3	ECO 16360	8-11-50	
2	ECO 16334	7-6-50	
1	ECO 16153	5-17-50	

REVISIONS

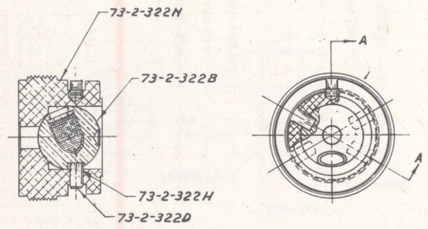
PHYSICAL PROPERTIES		UNLESS OTHERWISE SPECIFIED DIMENSIONS ARE IN INCHES	ORIGINAL DATE OF DRAWING AUG 29 1949
VP		TOLERANCES ON DECIMALS	DRAFTSMAN J.G.B. CHECKER
TS		ANGLES FRACTIONS	TRACER A.C.O. CHECKER
LL 2	73-2-320	MATERIAL	ENGINEER ENGINEER
BA	NEXT ASSY USED ON	HEAT TREATMENT	SUBMITTED C.R. Sutton CHIEF, ENGR DEPT
Bh	APPLICATION	FINAL PROTECTIVE FINISH	APPROVED BY ORDER OF THE CHIEF OF ORDNANCE COL ORD DEPT
Rh	DO NOT APPLY PART NO. DO AS SPECIFIED		SCALE UNIT WT

FUZE, PD, M503A1 DETAILS.

ORDNANCE DEPT
DEPT OF THE ARMY

DWG SIZE E 73-2-321 SHEET OF

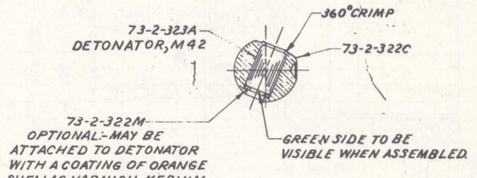
CLASS & DIV. C



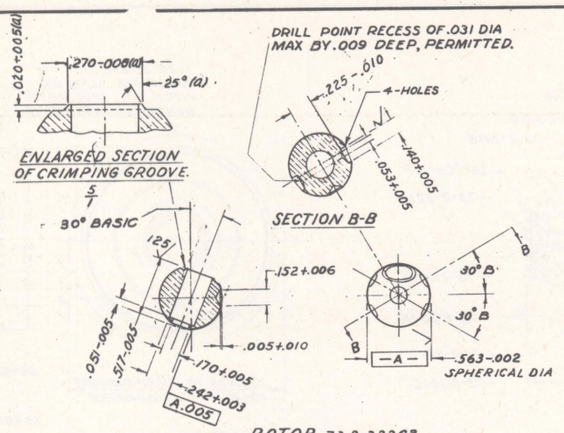
SECTION A-A

ROTOR HOUSING ASSEMBLY 73-2-322A3

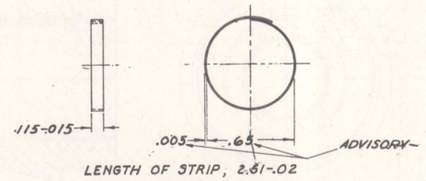
ARMING REQUIREMENTS FOR ROTOR:-
MUST NOT ARM AT 2000 RPM ± 25 RPM.
MUST ARM AT 5000 RPM ± 50 RPM.
FOR METHOD OF TEST SEE SPECIFICATION.



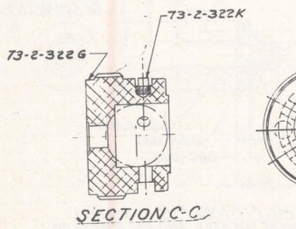
ROTOR ASSEMBLY 73-2-322B3



ROTOR 73-2-322C3
FORGED NAVAL BRASS BALL, CLASS "A."
ROCKWELL HARDNESS B90 MIN BEFORE MACHINING OPERATIONS.
FINISH √ TO BE 63, OTHER SURFACES AS SPECIFIED.
(a) DIMENSIONS CONTROL TOOL MANUFACTURE.

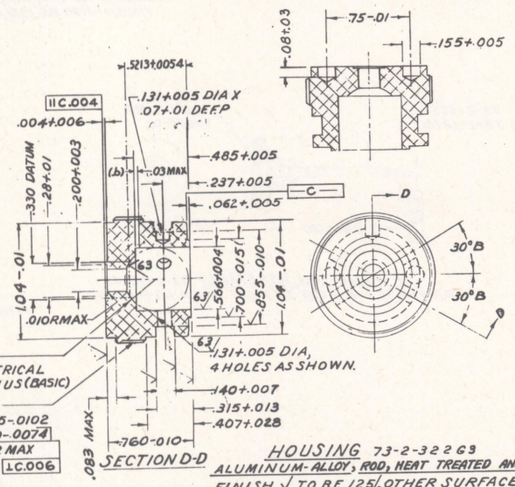


SPRING, DETENT 73-2-322D
BERYLLIUM COPPER, STRIP, COMMERCIAL
HEAT TREAT TO MEET ARMING LIMITS SHOWN ON ROTOR HOUSING ASSEMBLY.



SECTION C-C

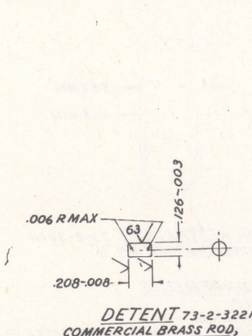
HOUSING ASSEMBLY 73-2-322NE



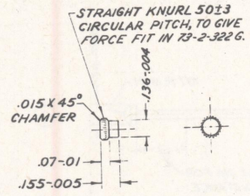
SECTION D-D

HOUSING 73-2-322G3
ALUMINUM-ALLOY, ROD, HEAT TREATED AND COLD WORKED
FINISH √ TO BE 125, OTHER SURFACES AS SPECIFIED.

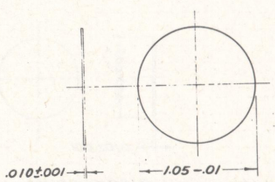
NOTE (b) FOR THIS DISTANCE THE CONTOUR OF THE SHOULDER MAY VARY BETWEEN THE SHARP CORNER AND SPHERICAL RADIUS SHOWN.



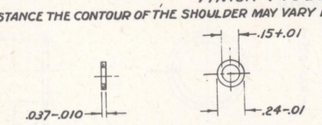
DETENT 73-2-322H
COMMERCIAL BRASS ROD, COMPOSITION "B", HALF HARD.
FINISH √ TO BE 125, OTHER SURFACE AS SPECIFIED.



STOP, SPRING 73-2-322K
ALUMINUM-ALLOY, HEAT TREATED AND COLD WORKED.
FINISH 125



DISC, BOOSTER 73-2-322
GILDING METAL



CUSHION, DETONATOR 73-2-322M
CORK-COMPOSITION, CLASS I
DIAMETER DIMENSION CONTROLS TOOL MANUFACTURE.

NOTICE:- THIS DRAWING SHALL NOT BE USED OR REPRODUCED EITHER WHOLLY OR IN PART EXCEPT WHEN AUTHORIZED IN CONNECTION WITH UNITED STATES GOVERNMENT PROCUREMENT.

SYM	DESCRIPTION	DATE	APPROVAL
J	ECO 16360	8-11-50	
E	ECO 16304	7-6-50	
I	ECO 16153	6-17-50	

REVISIONS

PHYSICAL PROPERTIES			
YP			
TS			
EL 2			
RA	73-2-320		
	NEXT ASSY	USED ON	
BH			
RH			

APPLICATION
DO NOT APPLY PART NO.
DO AS SPECIFIED

UNLESS OTHERWISE SPECIFIED DIMENSIONS ARE IN INCHES
TOLERANCES ON DECIMALS
ANGLES FRACTIONS
MATERIAL
HEAT TREATMENT
FINAL PROTECTIVE FINISH

ORIGINAL DATE OF DRAWING AUG 28 1949
DRAFTSMAN J.G.B. CHECKER
TRACER G.C.P. CHECKER
ENGINEER ENGINEER
SUBMITTED C.R. Dalton COL ORD DEPT
APPROVED BY ORDER OF THE CHIEF OF ORDNANCE L.H. Harris COL ORD DEPT

FUZE, PD, M503A1 DETAILS.

ORDNANCE DEPT
DEPT OF THE army

DWG SIZE E | 73-2-322 | SHEET | OF

SCALE, INCHES, 2/1 | UNIT WT

CL & DIV D

CHARGE, LOWER 73-2-323 B

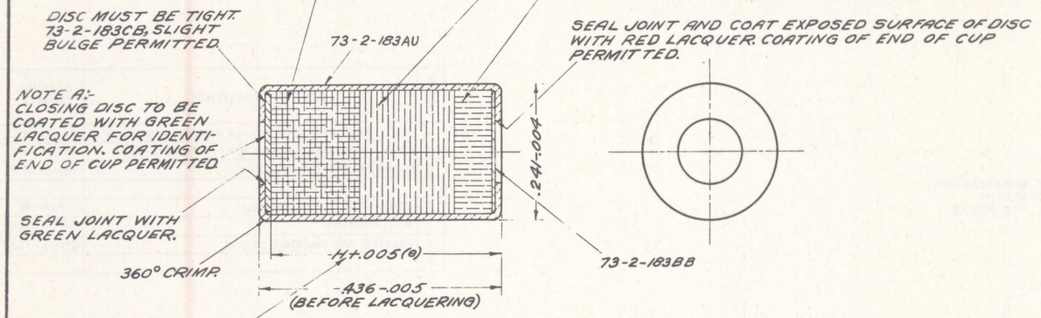
APPROX 3.21 GRAINS (208 MILLIGRAMS) TETRYL, GRADE I, CLASS a.(e)
MAY CONTAIN NOT MORE THAN 2% GRAPHITE, GRADE I OR II.
PRESS TO DIMENSION USED IN TRIAL LOADING AT PRESSURE OF APPROX 10,000 LBS PER SQ INCH.

CHARGE, INTERMEDIATE 73-2-323 C

3.86 ± .08 GRAINS (250. ± 5. MILLIGRAMS) LEAD AZIDE
PRESS AT 10,000 LBS PER SQ INCH.

CHARGE, UPPER 73-2-323 D

1.62 ± .08 GRAINS (105. ± 5. MILLIGRAMS) PRIMER MIXTURE
PRESS AT 10,000 LBS PER SQ INCH.



ASSEMBLY 73-2-323 A

DISC AND CUP WILL BE ASSEMBLED PRIOR TO LOADING BY EITHER OF THE FOLLOWING METHODS:-

1. COAT INSIDE BOTTOM SURFACE OF DETONATOR CUP WITH ACID-PROOF BLACK PAINT AND SET DETONATOR DISC ON PAINT FILM. PAINT MUST NOT EXTEND OVER EXPOSED SURFACE OF THE DISC. ASSEMBLY MUST BE DRIED FOR 24 HOURS AT 75°F TO 125°F BEFORE LOADING.
2. COAT DETONATOR DISC WITH PLASTIC ADHESIVE APPROVED BY OFFICE, CHIEF OF ORDNANCE, SEAT DISC AND CURE PLASTIC. AVERAGE THICKNESS OF ADHESIVE MUST NOT EXCEED .0005 INCH ON EXPOSED PORTION OF DISC. COLOR OF ADHESIVE MUST BE RED.

NOTES:-
(e) ESTABLISH "H" AND WEIGHT OF LOWER CHARGE REQUIRED TO OBTAIN TIGHT CLOSING DISC, AS SHOWN, USING MEAN WEIGHTS OF UPPER AND INTERMEDIATE CHARGES, ALL CHARGES PRESSED AT 10,000 PSI (NOTE: A VALUE OF .414 HAS BEEN USED SATISFACTORILY FOR "H").

LIST OF PARTS

LINE NO	NAME OF PART	NUMBER REQ'D PER COMPONENT	PIECE-MARK	MATERIAL: SIZE OR FORM	MATERIAL: KIND	MATERIAL: GRADE	MATERIAL: SPEC NUMBER	APPROXIMATE UNIT WEIGHT (GRAINS)	APPROX GROSS WT OF RAW STOCK PER 1000 ASSEMBLIES	REMARKS
1	ASSEMBLY		73-2-323 A					18.12		
2										
3	METAL PARTS	1 SET	73-2-183					9.43		(c)
4										
5										
6										
7	CHARGE, INTERMEDIATE	1	73-2-323 C		LEAD AZIDE		50-13-12	3.86		
8	CHARGE, LOWER	1	73-2-323 B		TETRYL	I, CLASS a	JAN-T-339	3.21		(a)
9	CHARGE, UPPER	1	73-2-323 D		PRIMER MIXTURE			1.62		(b)
10										
11					PAINT, ACID-PROOF BLACK	TYPES I & II	JAN-P-450			(d)
12					GRAPHITE	I OR II	JAN-G-155			
13										
14					LACQUER, RED, NO. 105	CLASS B	3-158			
15					LACQUER, GREEN, NO. 112	CLASS B	3-158			
16										

(a) LOWER CHARGE MAY BE MADE IN PELLET FORM AND RECONSOLIDATED IN CUP ADVISORY:- ONE SOLID PELLET, DIA=.198, LENGTH=.297, SPECIFIC GRAVITY, 1.5 MAX.

(b) PRIMER MIXTURE:-
POTASSIUM CHLORATE, GRADE I, CLASS b _____ 53% ± 2%, SPEC JAN-P-150
ANTIMONY SULPHIDE, GRADE I, CLASS a OR b _____ 17% ± 1%, SPEC JAN-A-159
LEAD THIOCYANATE (SULPHOCYANATE) _____ 25% ± 1%, SPEC JAN-L-65
LEAD AZIDE _____ 5% ± 1%, SPEC 50-13-12
ALL ABOVE PERCENTAGES ARE BY WEIGHT.

(c) METAL PARTS AS FURNISHED LOADING CONTRACTOR. LOADING CONTRACTOR MUST COAT CUP IN ACCORDANCE WITH DWG 73-2-183.

(d) A MIXTURE OF ACID-PROOF BLACK PAINTS, TYPES I AND II, SPEC JAN-P-450, THINNED WITH XYLENE, SPEC AXS-1479, IF NECESSARY.

LIST OF DRAWINGS

LINE NO	LIST OF DRAWINGS	DRAWING NUMBER
1	ASSEMBLY	73-2-323
2	METAL PARTS	73-2-183
3		
4	CARTON, PACKING	
5	BOX, PACKING	
6	PACKING AND MARKING OF BOX	
7	LIST OF PARTS & LIST OF SPECS	73-2-183A
8		

THIS DETONATOR FOR USE IN THE FOLLOWING:-
FUZE, P.D, M503

LIST OF SPECIFICATIONS

LINE NO	LIST OF SPECIFICATIONS	SPEC NUMBER *	REQUIRED BY
1	AMMUNITION, EXCEPT SMALL ARMS AMMUNITION, GEN SPEC FOR	50-0-1	DWG 73-2-323
2			
3	ANTIMONY SULPHIDE	JAN-A-159	DWG 73-2-323
4			
5	DETONATORS; LOADING, ASSEMBLING AND PACKING		DWG 73-2-323
6	GRAPHITE	JAN-G-155	DWG 73-2-323
7	LACQUER, CELLULOSE NITRATE, & THINNER (CLEAR AND PIGMENTED)	3-158	DWG 73-2-323
8	LEAD AZIDE	50-13-12	DWG 73-2-323
9	LEAD THIOCYANATE (SULPHOCYANATE)	JAN-L-65	DWG 73-2-323
10			
11	PAINT, ACID-PROOF, BLACK, FOR AMMUNITION	JAN-P-450	DWG 73-2-323
12	PAINTS, VARNISH, LACQUER, AND RELATED MATERIALS: METHODS OF INSPECTION, ETC (f)	TT-P-141	3-158
13	POTASSIUM CHLORATE (FOR USE IN AMMUNITION)	JAN-P-150	DWG 73-2-323
14			
15	TETRYL	JAN-T-339	DWG 73-2-323
16			
17	XYLENE (NITRATION GRADE)	AXS-1479	DWG 73-2-323

* THE SPECIFICATION NUMBERS SHOWN ARE BASIC NUMBERS ONLY. WHEN A SPECIFICATION IS REVISED A LETTER IS AFFIXED TO ITS BASIC NUMBER. SPECIFICATIONS REFERRED TO IN THESE SPECIFICATIONS AND NOT LISTED HEREON, SHALL NOT APPLY.

(f) REQUIRES COLOR CARD SUPPLEMENT TO SPEC 3-1.

0 INCHES

DETONATOR, M42. LOADING ASSEMBLY.

HEAT TREATMENT & PROTECTIVE FINISH

PHYSICAL PROPERTIES

ORIGINAL DATE OF DRAWING: AUG 5, 1949

REVISIONS

CLASS 73 | DIVISION 2 | DRAWING 323

DRAWING PERTAINS TO

WEIGHT

SCALE

TOLERANCES ON DIMENSIONS (Unless Otherwise Specified)

DO NOT SCALE DRAWING

APPLY PART NO. (As Specified)

SUBMITTED ORD. ENGR.

EXAMINED COL.

APPROVED COL.

D

ORDNANCE DEPT U.S. ARMY

LIST OF PARTS

LINE NO.	NAME OF PART	NUMBER REQD. PER COMPONENT	PIECE-MARK	MATERIAL: SIZE OR FORM	MATERIAL: KIND	MATERIAL: GRADE	MATERIAL: SPEC. NUMBER	APPROXIMATE UNIT WEIGHT (POUNDS)	APPROX. GROSS WT. OF RAW STOCK PER 1000 ASSEMBLIES	REMARKS
1	ASSEMBLY, FUZE, TSQ, M55A3		73-3-155A				50-42-4	2.15		
2	BOOSTER, M21A4 ASSEMBLY	1	73-2-154A				50-16-5	.73		
3	FUZE, TIME AND SUPERQUICK, M54	1	73-3-154A				50-42-4	1.42		
4										
5										

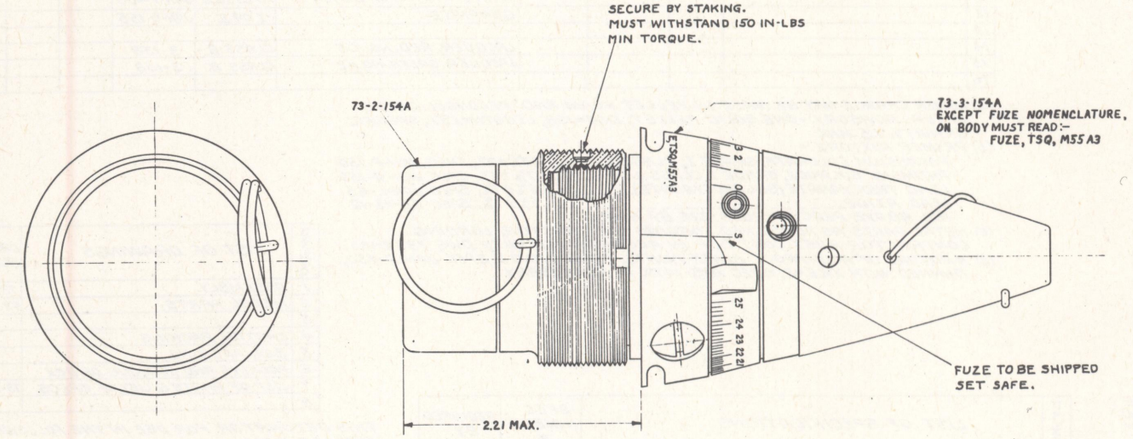
LIST OF SPECIFICATIONS

LINE NO.	LIST OF SPECIFICATIONS	SPEC. NUMBER *	REQUIRED BY
1	AMMUNITION, EXCEPT SMALL ARMS AMM., GENERAL SPEC. FOR	50-0-1	50-42-4
2			
3	FUZES, TIME AND SUPERQUICK, M54 AND M55A3, LOADING, ASSEMBLING AND PACKING	50-42-4	DRG. 73-3-155
4			
5			
6			

* THE SPECIFICATION NUMBERS SHOWN ARE BASIC NUMBERS ONLY. WHEN A SPECIFICATION IS REVISED A LETTER IS AFFIXED TO ITS BASIC NUMBER. SPECIFICATIONS REFERRED TO IN THESE SPECIFICATIONS AND NOT LISTED HEREON, SHALL NOT APPLY.

LIST OF DRAWINGS

LINE NO.	LIST OF DRAWINGS	DRAWING NUMBER
1	FUZE, TIME AND SUPERQUICK, M55A3, ASSEMBLY	73-3-155
2	FUZE, TIME AND SUPERQUICK, M54, ASSEMBLY	73-3-154
3	BOOSTER, M21A4, ASSEMBLY	73-2-154
4		
5	CONTAINER, FIBER, M43A1	PIF-18
6	BOX, PACKING	76-7-620
7	PACKING AND MARKING OF BOX	20-4-172
8		



ASSEMBLY 73-3-155A6

0 1 2 3 4 5 INCHES

OBSOLESCENT

SUPERSEDES OLD TRACING 73-3-155
UNDER REVISION DATE OF FEBRUARY 27, 1945

FUZE, TIME AND SUPERQUICK, M55A3 ASSEMBLY

FEBRUARY 10, 1940

REVISIONS	
4	3-9-44
5	2-27-45
6	8-15-45
7	9-23-48

CLASS	DIVISION	DRAWING	FILE
73	3	155	

TOLERANCE ON DIMENSIONS NOT OTHERWISE SPECIFIED
DECIMAL ±
FRACTIONAL ±
ANGULAR ±

DRG. PERTAINS TO

D'FTSMAN J.R.T. TRACER L.I.H. ENGINEER
CHECKED J.A.H. HEAD ENGINEER

SUBMITTED: W. M. Gallagher LT. COL. ORD. DEPT. U.S.A.
EXAMINED: P. L. Christensen LT. COL. ORD. DEPT. U.S.A.
APPROVED BY ORDER OF THE CHIEF OF ORDNANCE: C. T. Reed COL. ORD. DEPT. U.S.A.

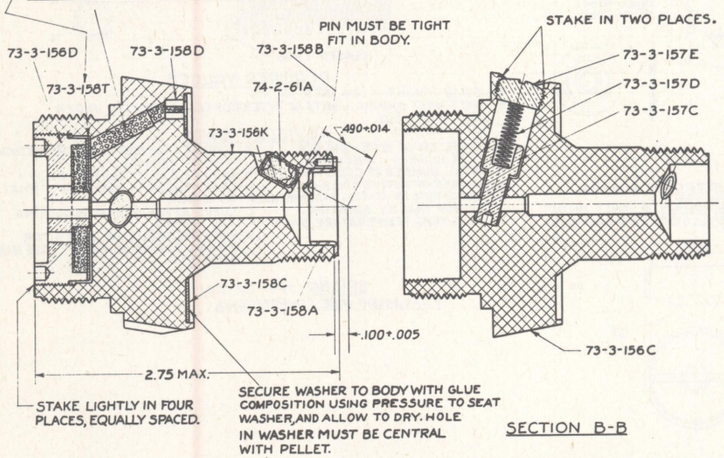
D

ORDNANCE DEPT. U.S.A.

SECURE BODY CHARGE DISC TO BODY WITH SHELLAC VARNISH, ORANGE, GRADE "B", MEDIUM BODY

CHARGE, BODY 73-3-156 B13

APPROX. 3. GRAINS BLACK POWDER, GRADE "A-4"

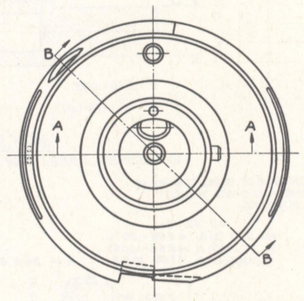


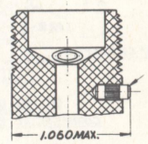
SECTION B-B

BODY ASSEMBLY 73-3-156A10

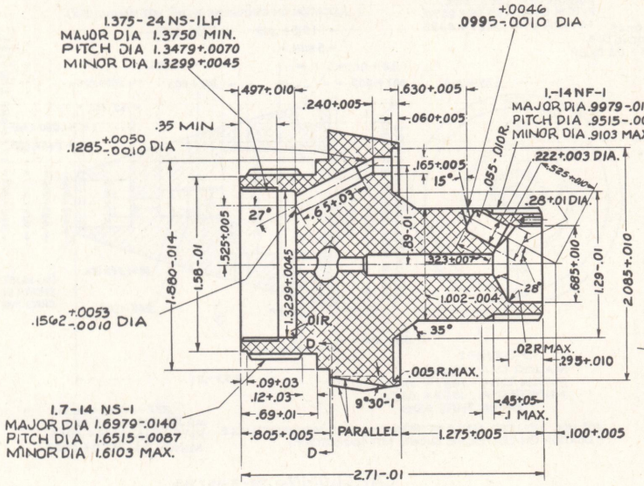
BODY METAL PARTS ASSEMBLY 73-3-156K9

ARMING REQUIREMENTS OF INTERRUPTER:-
MUST NOT ARM AT 1500 R.P.M.
MUST ARM AT 2000 R.P.M.

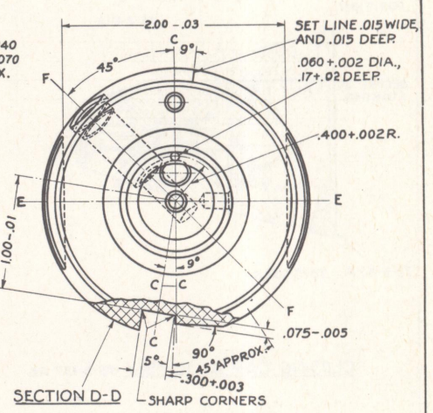




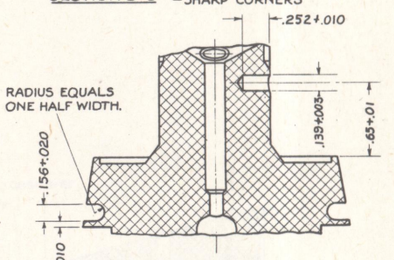
SECTION A-A



SECTION C-C-C-C



SECTION D-D

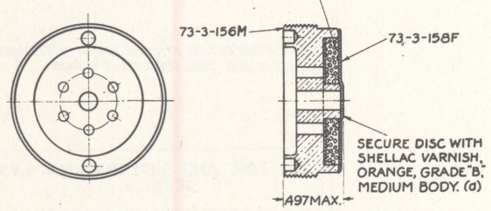


SECTION E-E

NOTE:- SEE DRG. 73-3-154B FOR PROTECTIVE FINISHES AND ALTERNATIVE MATERIALS.

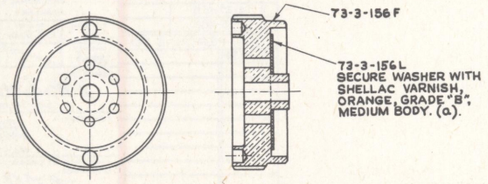
CHARGE, MAGAZINE 73-3-156E13

20 GRAINS BLACK POWDER, GRADE "A-4"



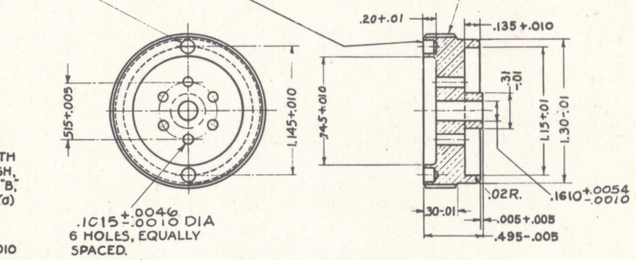
BOTTOM CLOSING SCREW LOADING ASSEMBLY 73-3-156D10

(a) ALTERNATIVE COATING:- DIP SCREW IN COMPOSITION OF LACQUER AND THINNER, CLASS A, SPEC. 3-158 AND ANILINE DYE, AND SECURE DISC WITH LACQUER. (NOTE:- SHELLAC SOLUTION SHOULD NOT BE USED TO SECURE DISC TO LACQUERED SCREW).



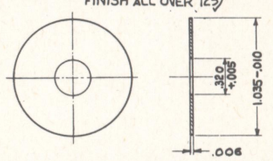
BOTTOM CLOSING SCREW ASSEMBLY 73-3-156M10

DIP SCREW IN SHELLAC SOLUTION, TYPE I, CLASS 1 BEFORE ASSEMBLING WASHER. (a)



SCREW, BOTTOM CLOSING 73-3-156F13

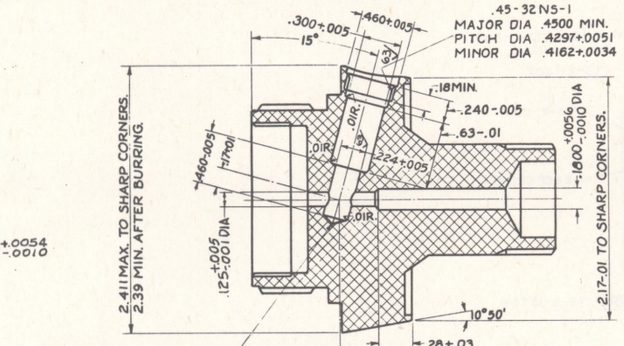
COMMERCIAL BRASS, ROD, COMPOSITION "B", HALF HARD
FINISH ALL OVER 125/



WASHER, BOTTOM CLOSING SCREW 73-3-156L13

BARRIER MATERIAL, [illegible] TYPE 2, CLASS 1

DIAMETER DIMENSIONS CONTROL TOOL MANUFACTURE.



DRILL POINT RECESS OF .15 DIA. x .05 DEEP (OPTIONAL).
MAX. OF .005 MISALIGNMENT PERMITTED BETWEEN CENTER LINES OF INTERRUPTER CAVITY AND FLASH HOLE.

SECTION F-F

BODY 73-3-156C13

ALUMINUM-ALLOY, ROD, HEAT-TREATED AND COLD WORKED
125/ ALL OVER EXCEPT AS NOTED
HARDNESS (THROUGHOUT)
ROCKWELL E-90 MIN.

SCALE, INCHES, 2/1

FUZE, TIME AND SUPERQUICK, M54 AND M55A3 DETAILS

FEB. 10, 1940

CLASS	DIVISION	DRAWING	FILE
73	3	156	

REVISIONS

1	1-29-41	6	1-15-43
2	6-6-41	7	4-19-43
3	10-3-41	8	7-19-44
4	1-2-42	9	2-27-45
5	8-18-42	10	7-2-45
12	9-23-48	11	8-15-45
13	7-22-50		

TOLERANCE ON DIMENSIONS NOT OTHERWISE SPECIFIED
DECIMAL ±
FRACTIONAL ±
ANGULAR ±

DFTSMAN: A.E.R. | TRACER: M.L.H. | ENGINEER: [illegible]
CHECKED: [illegible] | ENGINEER: M.T.

SUBMITTED: W. W. Hoelle, CAPT., ORD. DEPT., U.S.A.

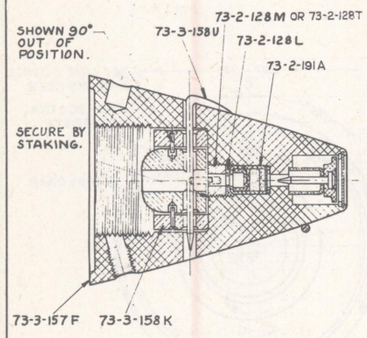
EXAMINED: [illegible], COL., ORD. DEPT., U.S.A.

APPROVED BY ORDER OF THE CHIEF OF ORDNANCE: [illegible], LT. COL., ORD. DEPT., U.S.A.

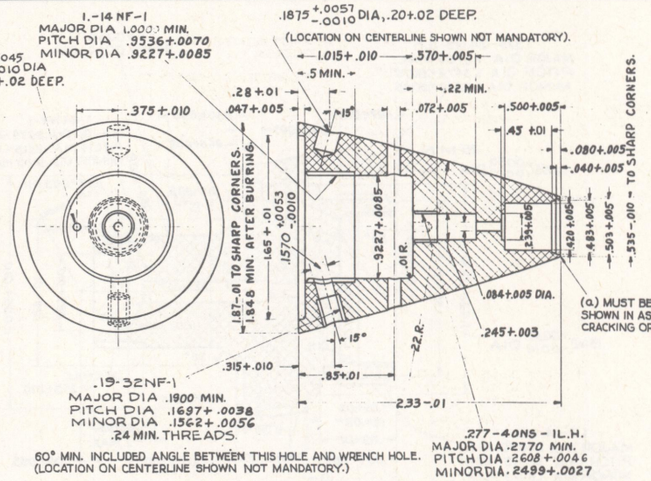
DRG. PERTAINS TO 73-3-154

D

ORDNANCE DEPT., U.S.A.



CLOSING CAP ASSEMBLY 73-3-157 A6

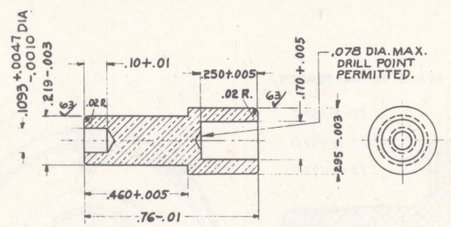


(a.) MUST BE CAPABLE OF BEING CRIMPED AS SHOWN IN ASSEMBLY 73-3-157A WITHOUT CRACKING OR CRUMBLING.

CAP, CLOSING 73-3-157 B8

ALUMINUM-ALLOY, ROD, HEAT-TREATED AND COLD WORKED

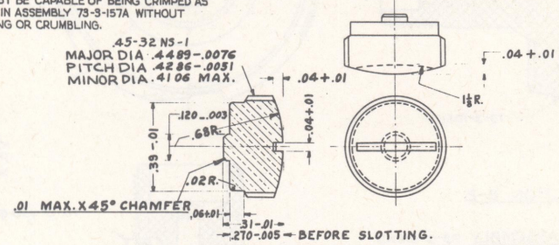
FINISH ALL OVER 125/



INTERRUPTER 73-3-157 C8

COMMERCIAL BRASS, ROD, COMPOSITION "B", HALF HARD.

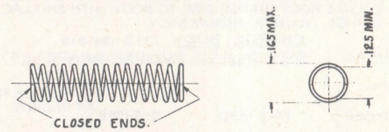
125/ ALL OVER EXCEPT AS NOTED



PLUG, INTERRUPTER CLOSING 73-3-157 E8

COMMERCIAL BRASS, ROD, COMPOSITION "B", HALF HARD.

FINISH ALL OVER 125/



REQUIRED VALUES

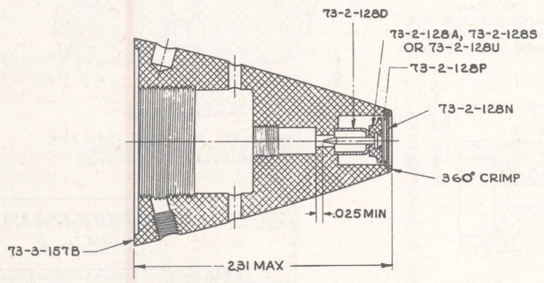
A- SOLID HEIGHT = .24 INCH MAX.
B- MUST MEET ARMING LIMITS OF INTERRUPTER SPECIFIED UNDER BODY ASSEMBLY.
C- LEFT HAND TURN.

ADVISORY DATA

A- DIAMETER OF WIRE=.014 INCH.
B- FREE HEIGHT= .7 INCH.
C- TOTAL NUMBER OF COILS=16
D- NUMBER OF ACTIVE COILS=14
E- SEASONING BY HEATING RECOMMENDED RATHER THAN BY BOUNCING.
F- SEASONING TEMPERATURE, 500°F.
G- LOAD AT ASSEMBLED HEIGHT, .58 INCH = 2¾ OZ. APPROX.
H- LOAD AT .3 INCH= 7 1/2 OZ. ± 3/8 OZ.
K- LOAD AT .5 INCH= 30 % ± 5 % OF THAT AT .3 INCH.
L- LOADS APPLY AFTER SEASONING AND PLATING.
M- WHEN ASSEMBLED AT .3 INCH FOR 24 HRS. SPRING MUST NOT LOSE MORE THAN 1/4 OZ.

SPRING 73-3-157 D8

STEEL, MUSIC WIRE, COMPOSITION A



CLOSING CAP, METAL PARTS ASSEMBLY 73-3-157F6

FOR PROTECTIVE FINISHES AND ALTERNATIVE MATERIALS SEE DRG. 73-3-154B

SCALE, INCHES, 2/1, 4/1

FUZE, TIME AND SUPERQUICK, M54 & M55A3 DETAILS

FEB. 10, 1940				CLASS	DIVISION	DRAWING	FILE
REVISIONS				73	3	157	
1	4-30-40	7	9-23-48				
2	6-6-41	8	7-22-50				
3	10-3-41						
4	1-2-42						
5	2-27-45						
6	8-15-45						

TOLERANCE ON DIMENSIONS NOT OTHERWISE SPECIFIED
DECIMAL ±
FRACTIONAL ±
ANGULAR ±

DRG. PERTAINS TO
73-3-154

D'FTSMAN A.E.R. | TRACER S.C. Gallo | ENGINEER [illegible]
CHECKER [illegible] | CHIEF ENGINEER M.T

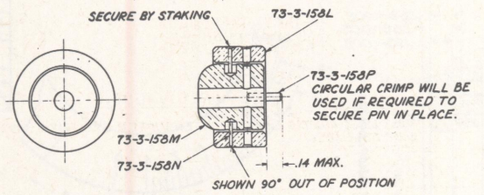
SUBMITTED: K. W. Heller, CAPTAIN, ORD. DEPT., U.S.A.

EXAMINED: [illegible], COL. ORD. DEPT., U.S.A.

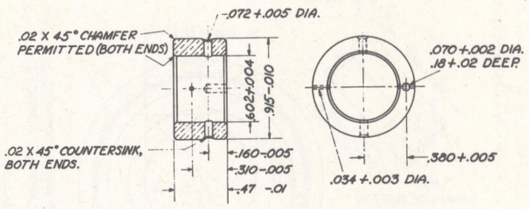
APPROVED BY ORDER OF THE CHIEF OF ORDNANCE: K. F. Adamson, LT. COL. ORD. DEPT., U.S.A.

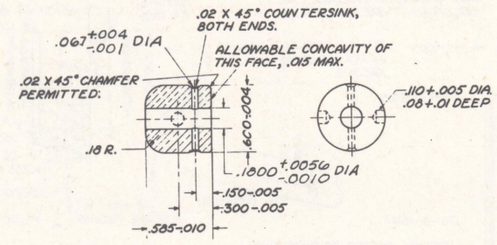
D

ORDNANCE DEPT., U.S.A.

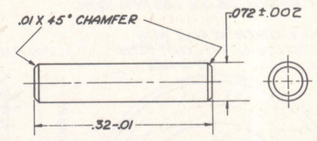


PLUNGER ASSEMBLY 73-3-158K1

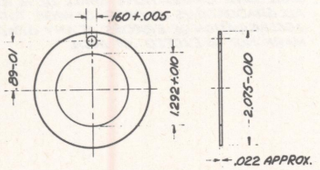




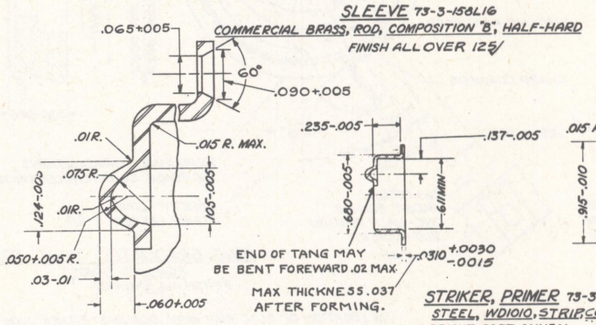
PLUNGER 73-3-158M16
COMMERCIAL BRASS, ROD, COMPOSITION "B", HALF-HARD
FINISH ALL OVER 125/



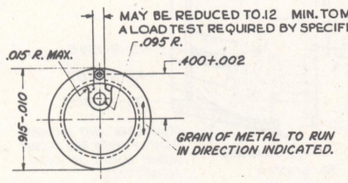
PIN, SLEEVE DOWEL 73-3-158P16
COMMERCIAL BRASS, ROD, COMPOSITION "B", HALF-HARD
FINISH ALL OVER 125/



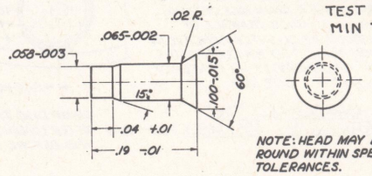
WASHER, BODY 73-3-158C12
FUZE, CLOTH



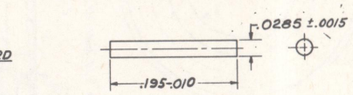
SLEEVE 73-3-158L16



STRIKER, PRIMER 73-3-158A16
STEEL, WD1010, STRIP, COLD-ROLLED
BRIGHT, SOFT ANNEAL
HEAT TREAT AT 500°F FOR 30 MINUTES BEFORE PLATING. HEAT TREAT AT 300°F FOR NOT LESS THAN 30 MIN. AFTER PLATING.

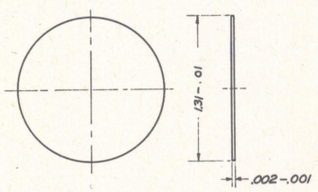


PIN, STRIKER DOWEL 73-3-158B16
WIRE, BRASS, GRADE "B"
FINISH ALL OVER 125/

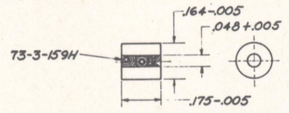


PIN, SHEAR 73-3-158N16
COPPER WIRE 50FT
NOTE: CONTROL PHYSICAL PROPERTIES, WITHIN MATERIALS SPECIFICATION LIMITS, TO MEET LOAD TEST PRESCRIBED IN FUZE SPEC. (ADVISORY: MIN TENSILE STRENGTH, 34,000 PSI)

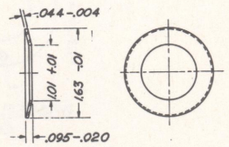
NOTE: HEAD MAY BE OFF ROUND WITHIN SPECIFIED TOLERANCES.



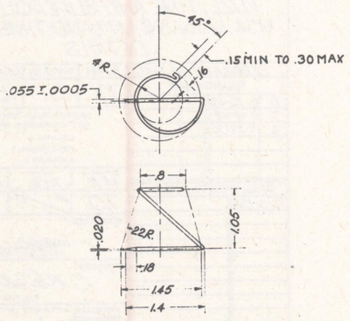
DISC, CHARGE RETAINER 73-3-158F14
ONION SKIN PAPER
DIAMETER DIMENSION CONTROLS TOOL MANUFACTURE



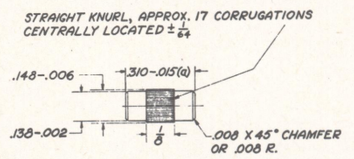
PELLET, BODY 73-3-158D16
APPROX. 1.45 GRAINS BLACK POWDER, GRADE "A-5"
PRESS AT APPROX. 50,000 LBS. PER SQ. IN.



WASHER, TENSION 73-3-158S13
CHROME-VANADIUM STEEL, WD6150, COLD ROLLED
HEAT TREAT SO THAT THE AXIALLY APPLIED LOAD REQUIRED TO COMPRESS TO A HEIGHT .05 INCH SHALL BE 235 ± 50 POUNDS.

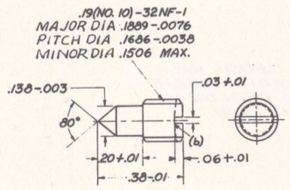


WIRE, SAFETY 73-3-158U16
STEEL, WIRE, MUSIC, SPRING, COMPOSITION A

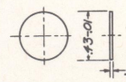


PIN, UPPER RING LOCK 73-3-158Q16
STEEL, FS1010 OR FS1020
FINISH ALL OVER 125/

(a) THIS TOLERANCE INCLUDES VARIATIONS DUE TO CUT-OFF ANGULARITY WHEN CUT-OFF IS PERFORMED BY SHEARING.



SCREW, SET 73-3-158R16
COMMERCIAL BRASS, ROD, COMPOSITION "B", HALF-HARD
FINISH ALL OVER 125/
(b) ALTERNATIVE: SLOT CUT TO SAME DEPTH WITH 1.0 MIN DIA CIRCULAR CUTTER.



DISC, BODY CHARGE 73-3-158T
ONION SKIN PAPER
DIAMETER DIMENSION CONTROLS TOOL MANUFACTURE.

SCALE, INCHES, 1/1, 2/1, 4/1, 10/1

NOTE:-SEE DRAWING 73-3-154B FOR ALTERNATIVE MATERIALS AND PROTECTIVE FINISHES.

SUPERSEDES OLD TRACING 73-3-158 UNDER REVISION DATE OF MARCH 9, 1944.

FUZE, TIME AND SUPERQUICK M54 AND M55A3. DETAILS

FEBRUARY 10, 1940	CLASS	DIVISION	DRAWING	FILE
REVISIONS	73	3	158	

11	4-19-43	
12	3-9-44	
13	1-29-45	
14	8-15-45	
15	9-23-48	
16	7-22-50	

TOLERANCE ON DIMENSIONS NOT OTHERWISE SPECIFIED
DECIMAL ±
FRACTIONAL ±
ANGULAR ±

D'FTSMAN J.J.T. | TRACER J.J.T. | ENGINEER

CHECKER J.J.T. | ENGG. INSPECTOR

DRG. PERTAINS TO 73-3-154

SUBMITTED: J. Gallagher, LT. COL. ORD. DEPT. U.S.A.

EXAMINED: F.K. Woodbury, LT. COL. ORD. DEPT. U.S.A.

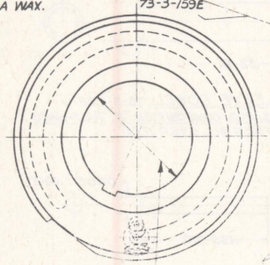
APPROVED BY ORDER OF THE CHIEF OF ORDNANCE: C.T. Lloyd, COL. ORD. DEPT. U.S.A.

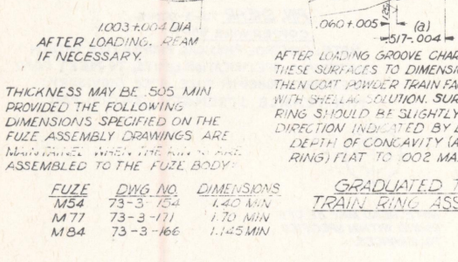
D

ORDNANCE DEPT. U.S.A.

CHARGE, GROOVE, (GRAD RING) 73-3-159B
APPROX 56 GRAINS FUZE POWDER
PRESS AT APPROX 68,000 LBS PER SQ IN.

SECURE GROOVE COVER TO RING WITH SHELLAC SOLUTION. WHEN DRY, COAT WITH CARNUBA WAX.





BEFORE LOADING GROOVE CHARGE, COAT GROOVE WITH SHELLAC SOLUTION, TYPE II, CLASS I.

POLISH AND LACQUER, AFTER LOADING AND FACING.

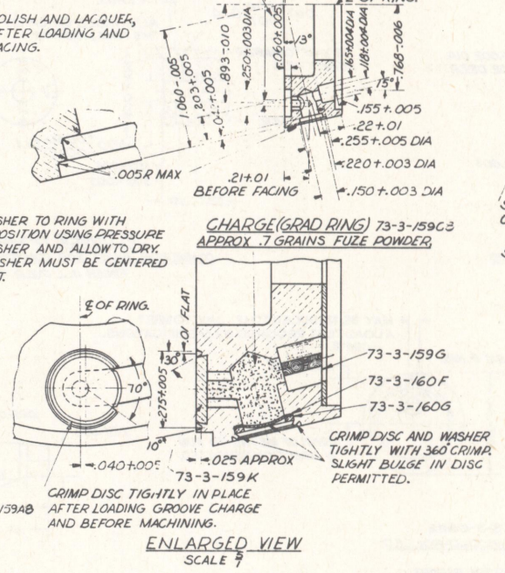
SECURE WASHER TO RING WITH GLUE COMPOSITION USING PRESSURE TO SEAT WASHER AND ALLOW TO DRY. HOLE IN WASHER MUST BE CENTERED WITH PELLET.

AFTER LOADING GROOVE CHARGE, MACHINE THESE SURFACES TO DIMENSIONS SHOWN, THEN COAT POWDER TRAIN FACE OF RING WITH SHELLAC SOLUTION. SURFACE OF RING SHOULD BE SLIGHTLY CONCAVE IN DIRECTION INDICATED BY DOTTED LINE. DEPTH OF CONCAVITY (AT CENTER OF RING) FLAT TO .002 MAX

(a) THICKNESS MAY BE .505 MIN PROVIDED THE FOLLOWING DIMENSIONS SPECIFIED ON THE FUZE ASSEMBLY DRAWINGS ARE MAINTAINED WHEN THE RING IS ASSEMBLED TO THE FUZE BODY:

FUZE	DWG NO.	DIMENSIONS
M54	73-3-154	1.40 MIN
M77	73-3-171	1.70 MIN
M84	73-3-166	1.145 MIN

GRADUATED TIME TRAIN RING ASSEMBLY 73-3-159AB



CHARGE (GRAD RING) 73-3-159C3
APPROX .7 GRAINS FUZE POWDER

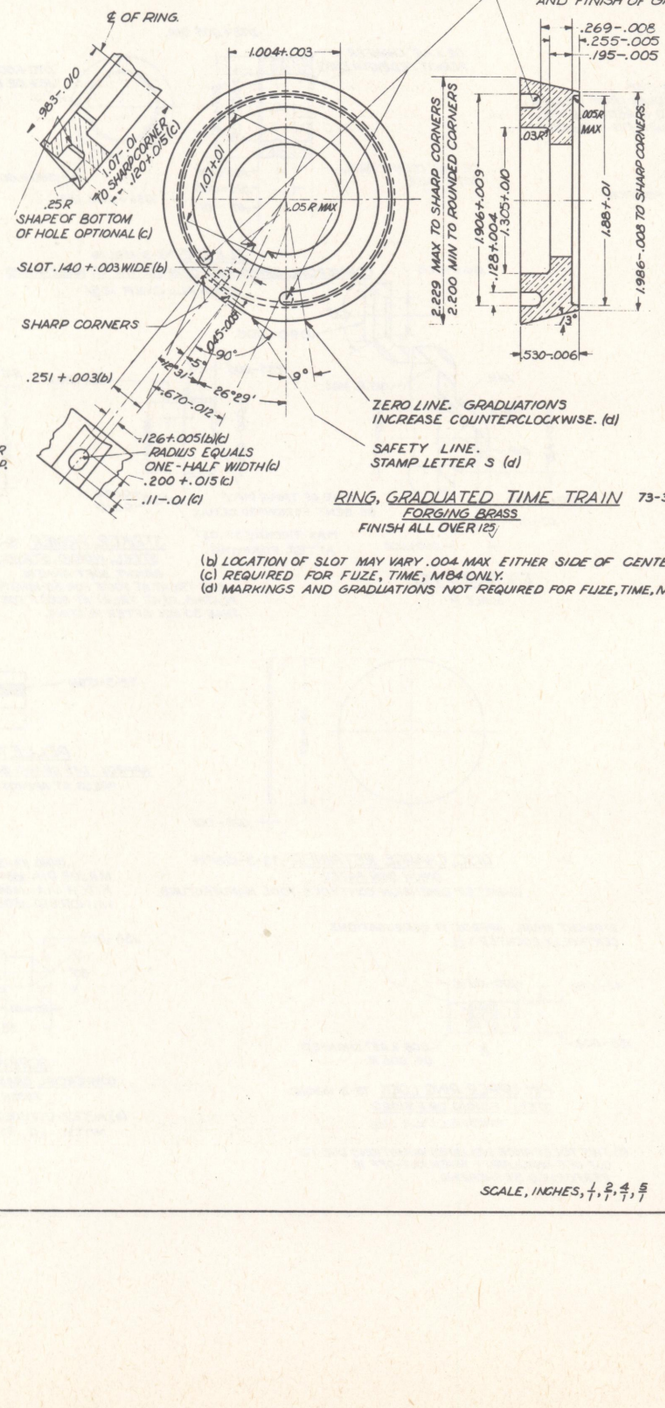
CRIMP DISC TIGHTLY IN PLACE AFTER LOADING GROOVE CHARGE AND BEFORE MACHINING.

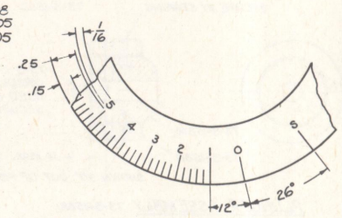
CRIMP DISC AND WASHER TIGHTLY WITH 360° CRIMP. SLIGHT BULGE IN DISC PERMITTED.

ENLARGED VIEW
SCALE 5/1

RADIUS EQUALS ONE-HALF WIDTH.

GROOVE MAY BE .002 WIDER AND .005 DEEPER THAN REQUIREMENTS AT START AND FINISH OF GROOVE.





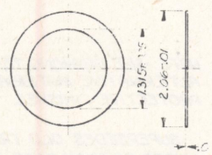
DEVELOPMENT OF GRADUATIONS (d)
GRADUATE FROM "0" TO "25". SUBDIVIDE EACH GRADUATION FROM "1" TO "25" INTO FIFTHS. THE SUCCESSIVE GRADUATIONS SHALL BE 12° APART. ALL GRADUATIONS .01 DEEP .01 WIDE. TOTAL ACCUMULATION OF ERRORS AT ANY GRADUATION MARK NOT TO EXCEED .01 INCH.

RING, GRADUATED TIME TRAIN 73-3-159DB
FORGING BRASS
FINISH ALL OVER 125

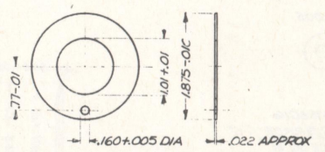
(b) LOCATION OF SLOT MAY VARY .004 MAX EITHER SIDE OF CENTER LINE
(c) REQUIRED FOR FUZE, TIME, M84 ONLY.
(d) MARKINGS AND GRADUATIONS NOT REQUIRED FOR FUZE, TIME, M84.

PHYSICAL PROPERTIES

Y.P.	
T.S.	
EL. 2	
RED.	
BR.	
ROCK.	

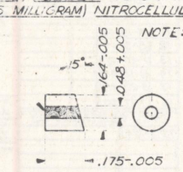


COVER, GROOVE (GRAD RING) 73-3-159E1
ONION SKIN PAPER
DIAMETER DIMENSIONS CONTROL TOOL MANUFACTURE.

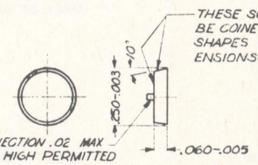


WASHER, GRADUATED RING 73-3-159F4
FUZE CLOTH

CHARGE, PELLET 73-3-159H3
APPROX .01 GRAIN (.65 MILLIGRAM) NITROCELLULOSE, LONG FIBER
NOTE:- MOISTURE CONTENT NOT TO EXCEED 0.70 %



PELLET, (GRAD RING) 73-3-159G7
APPROX 1.27 GRAINS BLACK POWDER, GRADE A-5
PRESS AT APPROX 50,000 LBS PER SQ IN.



A CUT-OFF PROJECTION .02 MAX DIA AND .031 MAX HIGH PERMITTED ON THIS END.

DISC, SAFETY 73-3-159K8
COMMERCIAL BRASS, ROD, COMPOSITION "B", HALF HARD
FINISH ALL OVER 125

FOR PROTECTIVE FINISHES AND ALTERNATIVE MATERIALS, SEE DRAWING 73-3-154B

NOTICE: THIS DRAWING SHALL NOT BE USED NOR REPRODUCED EITHER WHOLLY OR IN PART EXCEPT WHEN AUTHORIZED IN CONNECTION WITH UNITED STATES GOVERNMENT PROCUREMENT.

SUPERSEDES 73-3-159 WITH CHANGE 11-18-48

SCALE, INCHES, 1/1, 2/1, 4/1, 5/1

FUZE, TIME AND SUPERQUICK M54, M55A3 & M77, AND TIME M84 DETAILS

FEBRUARY 10, 1940	CLASS	DIVISION	DRAWING	FILE
REVISIONS	73	3	159	

6	6-15-45			
7	11-18-48			
8	7-22-50			

TOLERANCE ON DIMENSIONS NOT OTHERWISE SPECIFIED
DECIMAL ±
FRACTIONAL ±
ANGULAR ±

D'PTSMAN	TRACER	ENGINEER
A.E.R	REG	JLR
CHECKER		ENGINEER
A.C.J.		

DRG. PERTAINS TO
73-3-154

SUBMITTED:
ORD. ENG'RD. DEPT., U. S. A.

EXAMINED:
COL. ORD. DEPT., U. S. A.

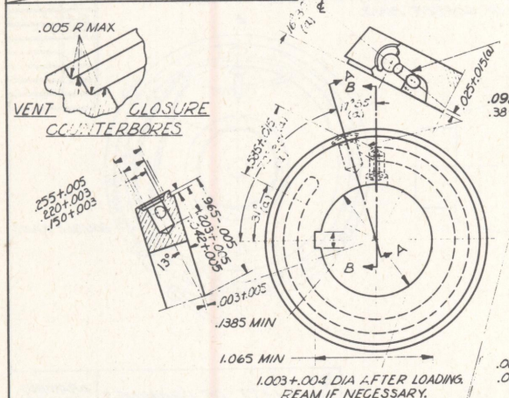
APPROVED BY ORDER OF THE CHIEF OF ORDNANCE:
COL. ORD. DEPT., U. S. A.

D

ORDNANCE DEPT., U. S. A.

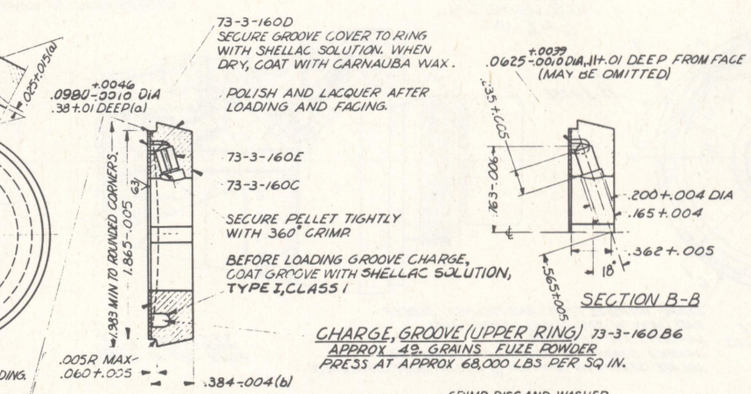
HEAT TREATMENT AND FINAL FINISH

PHYSICAL PROPERTIES	
Y.P.	
T.S.	
EL. 2	
RED.	
BR.	
ROCK.	



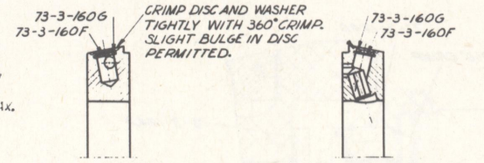
(a) DOES NOT APPLY WHEN ALTERNATIVE (RADIAL) VENT IS USED.
(b) THICKNESS MAY BE .370 MIN, PROVIDED THE FOLLOWING DIMENSIONS SPECIFIED ON THE FUZE ASSEMBLY DRAWINGS ARE MAINTAINED WHEN THE RINGS ARE ASSEMBLED TO THE FUZE BODY:

FUZE	DWG NO.	DIMENSIONS
M 54	73-3-154	1.40 MIN
M 77	73-3-171	1.70 MIN
M 84	73-3-166	1.145 MIN



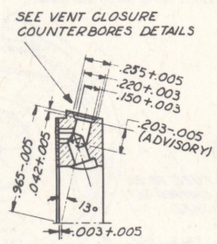
SECTION B-B

CHARGE, GROOVE (UPPER RING) 73-3-160B6
APPROX 49 GRAINS FUZE POWDER
PRESS AT APPROX 68,000 LBS PER SQ IN.

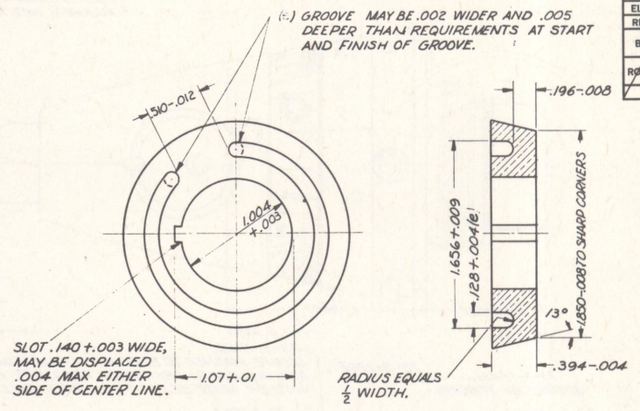


SECTION A-A
ASSEMBLY OF VENT CLOSURE

SECTION B-B (ALT)
ASSEMBLY OF
RADIAL VENT CLOSURE

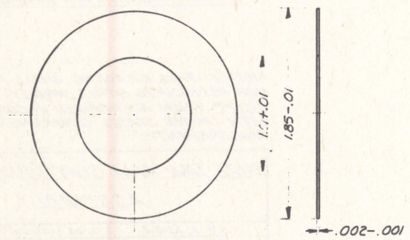


SECTION B-B (ALT)
DETAIL OF
RADIAL VENT

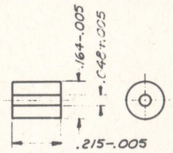


RING, UPPER TIME TRAIN 73-3-160C10
FORGING BRASS
FINISH ALL OVER 125

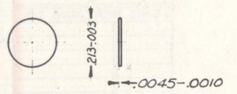
UPPER TIME TRAIN RING ASSEMBLY 73-3-160A10
125 ALL OVER EXCEPT AS NOTED



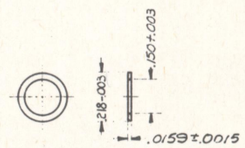
COVER, GROOVE (UPPER RING) 73-3-160D
ONION SKIN PAPER
DIAMETER DIMENSIONS CONTROL TOOL MANUFACTURE



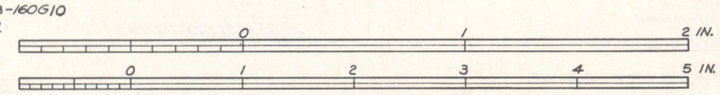
PELLET, UPPER RING 73-3-160E9
APPROX 1.79 GRAINS BLACK POWDER, GRADE A-5
PRESS AT APPROX 50,000 LBS PER SQ IN.



DISC, VENT CLOSING 73-3-160F8
PLASTIC, POLYETHYLENE, GRADE 1, CLASS 1 OR 3
DIAMETER DIMENSION CONTROLS TOOL MANUFACTURE



WASHER, VENT CRIMPING SUPPORT 73-3-160G10
COMMERCIAL BRASS, STRIP, COMPOSITION C, HALF HARD



FOR PROTECTIVE FINISHES AND ALTERNATIVE MATERIALS, SEE DRAWING 73-3-154B

NOTICE: THIS DRAWING SHALL NOT BE USED NOR REPRODUCED EITHER WHOLLY OR IN PART EXCEPT WHEN AUTHORIZED IN CONNECTION WITH UNITED STATES GOVERNMENT PROCUREMENT.

SUPERSEDES 73-3-160 WITHOUT CHANGE 11-18-48

FUZE, TIME AND SUPERQUICK, M54, M55A3, & M77, AND TIME, M84 DETAILS

FEBRUARY 10, 1940

CLASS	DIVISION	DRAWING	FILE
73	3	160	

REVISIONS

8	8-15-45
9	11-18-48
10	7-22-50

TOLERANCE ON DIMENSIONS NOT OTHERWISE SPECIFIED
DECIMAL ±
FRACTIONAL ±
ANGULAR ±

DRG. PERTAINS TO
73-3-154

DFTSMAN	TRACER	ENGINEER
D.C.S.	REG	sep
CHECKER		ENGINEER
A.C.J	3-1 6-0	ajf

SUBMITTED:- D. R. Beeman
ORD. ENG., ORD. DEPT., U. S. A.

EXAMINED:- C. R. Smith
COL., ORD. DEPT., U. S. A.

APPROVED BY ORDER OF THE CHIEF OF ORDNANCE:- J. H. Burns
COL., ORD. DEPT., U. S. A.

D

ORDNANCE DEPT., U. S. A.

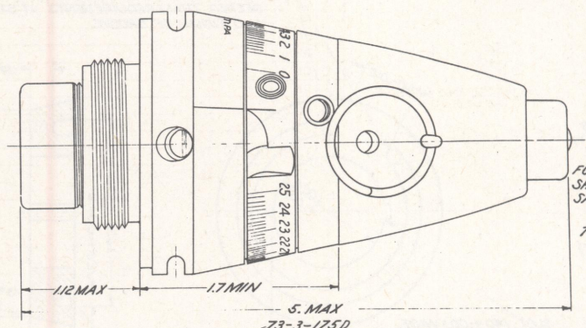
HEAT TREATMENT AND FINAL FINISH

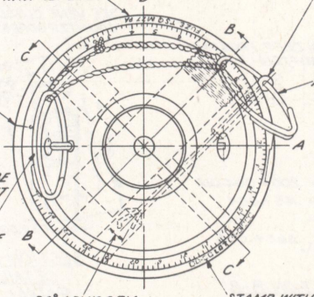
STAMP WITH 1/16 LETTERS AND FIGURES, .01 DEEP, DESIGNATION OF FUZE AND MANUFACTURER'S INITIALS OR SYMBOL.
SAMPLE STAMPING:- FUZE TSQ M77 PA.
LOCATE STAMPING APPROX 3/16 BELOW BODY SHOULDER.
MARKING NOT TO INTERFERE WITH SET LINE.

PIN, LONG COTTER 73-3-171B
STEEL, COMMERCIAL
1/16 X 1 3/4 LONG.

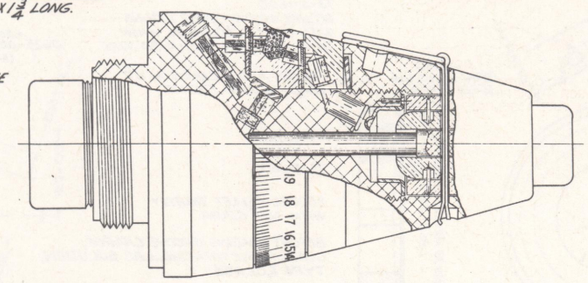
CORD 73-3-171D
TWINE, COTTON, SEINE NO. 18
APPROX 8. LONG. ALLOW SUFFICIENT SLACK TO PERMIT WITHDRAWAL OF COTTER PINS.

PHYSICAL PROPERTIES	
Y.P.	
T.S.	
EL. 2	
RED.	
BR.	
ROCK.	

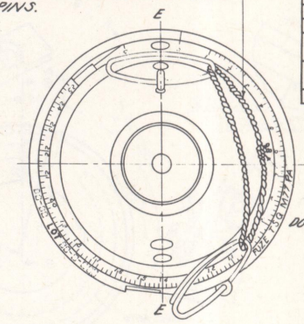


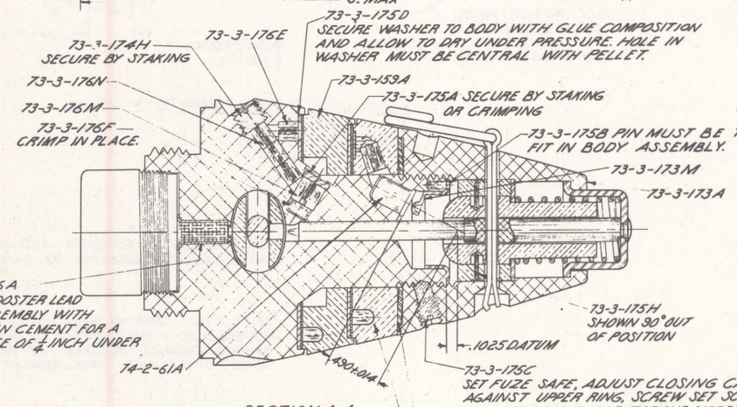


STAMP WITH 1/16 LETTERS AND FIGURES, .01 DEEP DATE (MONTH AND YEAR) LOADED AND LOADER'S LOT NUMBER.
SAMPLE STAMPING:-12-43 LOT P.A.-12-123.
LOCATE STAMPING APPROX 3/16 BELOW BODY SHOULDER.

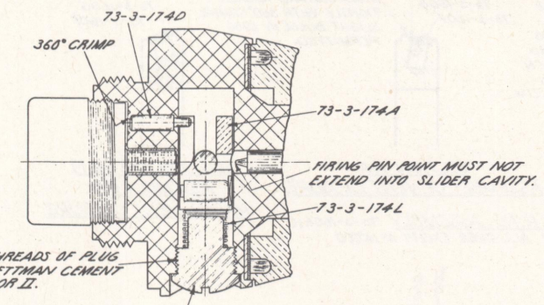


SECTION E-E
FUZE SET AT ZERO.

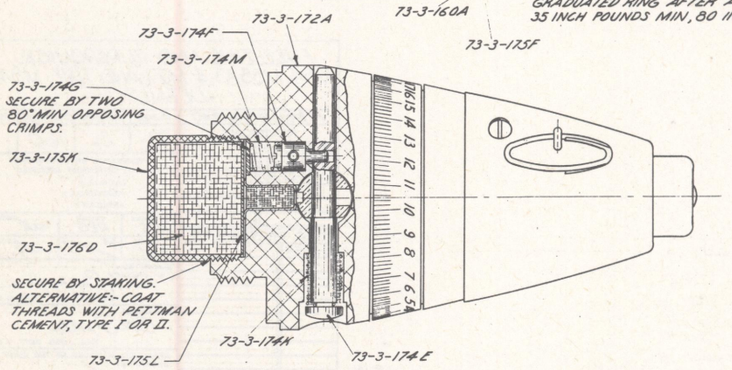




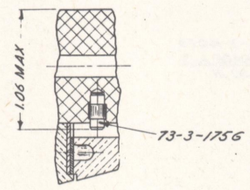
SECTION A-A



SECTION B-B



SECTION C-C



SECTION D-D

ASSEMBLY 73-3-171A 4

FOR PROTECTIVE FINISHES SEE DWG 73-3-171B

0 1 2 3 4 5 INCHES.

SUPERSEDES 73-3-171 WITHOUT CHANGE 11-18-48

LINE NO.	LIST OF DRAWINGS	DRAWING NUMBER
1	ASSEMBLY	73-3-171
2	LIST OF SPECIFICATIONS	73-3-171A
3	LIST OF PARTS	73-3-171B
4	DETAILS	73-3-172
5	DETAILS	73-3-173
6	DETAILS	73-3-174
7	DETAILS	73-3-175
8	DETAILS	73-3-176
9	DETAILS	73-3-159
10	DETAILS	73-3-160
11	PRIMER, M33, ASSEMBLY	74-2-61
12	DETONATOR, M29, ASSEMBLY	73-2-204
13	CONTAINER, FIBER	75-14-486
14	BOX, PACKING AND MARKING	20-4-491

NOTICE:-THIS DRAWING SHALL NOT BE USED NOR REPRODUCED EITHER WHOLLY OR IN PART EXCEPT WHEN AUTHORIZED IN CONNECTION WITH UNITED STATES GOVERNMENT PROCUREMENT.

FUZE, TIME AND SUPERQUICK, M77
ASSEMBLY

JULY 1, 1944

CLASS	DIVISION	DRAWING	FILE
73	3	171	

REVISIONS

4	1-12-48
5	11-18-48

TOLERANCE ON DIMENSIONS NOT OTHERWISE SPECIFIED
DECIMAL ±
FRACTIONAL ±
ANGULAR ±

D'FTSMAN	TRACER	ENGINEER
E.H.F.	J.M.G.	

CHECKER	ENGINEER
A.C.J.	

DRG. PERTAINS TO

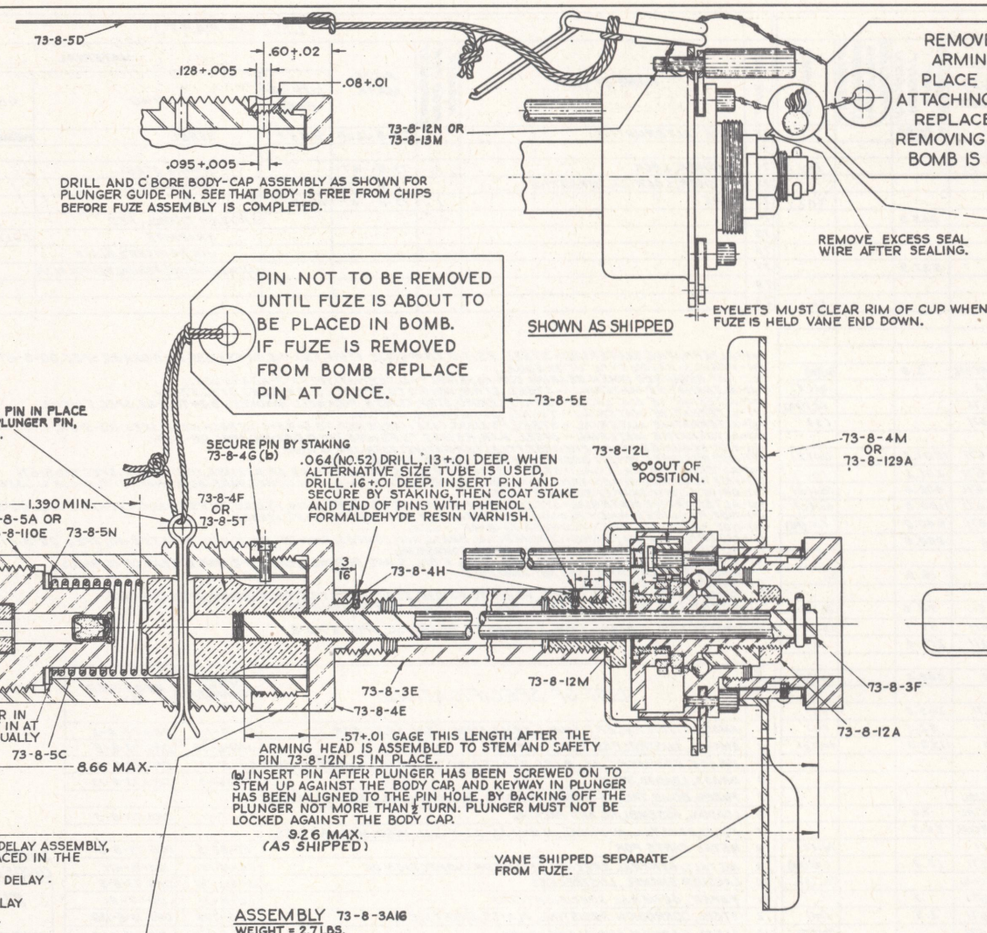
SUBMITTED:-
ORD. ENG., ORD. DEPT. U.S.A.

EXAMINED:-
COL., ORD. DEPT. U.S.A.

APPROVED BY ORDER OF THE CHIEF OF ORDNANCE:-
COL., ORD. DEPT. U.S.A.

D

ORDNANCE DEPT., U.S.A.



LINE NO.	LIST OF DRAWINGS	DRAWING NUMBER
1	ASSEMBLY	73-8-3
2	LIST OF PARTS AND LIST OF SPECIFICATIONS	73-8-3A
3	DETAILS	73-8-4
4	DETAILS	73-8-5
5	DETAILS	73-8-110
6	DETAILS	73-8-12
7	DETAILS	73-8-13
8	DETAILS	73-8-129
9	PRIMER DETONATOR, M14, .025 SEC. DELAY ASSEMBLY	73-8-69
10		
11	PACKING BOX	76-16-416
12	PACKING AND MARKING OF BOX	20-4-467
13	CONTAINER	76-1-222
14		

PRIMER DETONATOR, M14, ASSEMBLIES, WITH .01 SECOND DELAY, .1 SECOND DELAY AND NON DELAY ELEMENTS REFERRED TO IN NOTE 1, ARE TO BE PROCURED AND ISSUED AS SEPARATE ITEMS.

THIS FUZE IS FOR USE IN THE FOLLOWING BOMBS:-
BOMB, G.P., 100 LB., AN-M30.
BOMB, G.P., 250 LB., AN-M57.
BOMB, FRAG, 260 LB, AN-M81
BOMB, FRAG, 220 LB, AN-M88

SUPERSEDES OLD TRACING 73-8-3 UNDER REVISION DATE OF AUG. 12, 1943.

FUZE, BOMB, TAIL, AN-M100A2 .025 SECOND DELAY. ASSEMBLY AND DETAILS.

JUNE 5, 1934	CLASS	DIVISION	DRAWING	FILE
REVISIONS	73	8	3	

13	4-15-43
14	6-12-43
15	5-16-44
16	8-15-45
17	3-22-46

TOLERANCE ON DIMENSIONS NOT OTHERWISE SPECIFIED
DECIMAL ±
FRACTIONAL ±
ANGULAR ±

DRG. PERTAINS TO

D'FTSMAN B.G.F. TRACER B.G.F. ENGINEER
CHECKER NWF C.O. SR. ENGINEER

SUBMITTED: MAJ., ORD. DEPT. U.S.A.
EXAMINED: ORD. DEPT. U.S.A.
APPROVED BY ORDER OF THE CHIEF OF ORDNANCE: COL., ORD. DEPT. U.S.A.

D

ORDNANCE DEPT., U.S.A.

LIST OF PARTS

LINE NO.	NAME OF PART	NUMBER REQD PER COMPONENT	PIECE MARK	MATERIAL: SIZE OR FORM	MATERIAL: KIND	MATERIAL: GRADE	MATERIAL: SPEC. NUMBER	APPROXIMATE UNIT WEIGHT (GRAINS)	APPROX. GROSS WT. OF RAW STOCK PER ROUND ASSEMBLIES	REMARKS
1	ASSEMBLY		73-B- 3A					2.7LBS.		
2	ARMING HEAD ASSEMBLY		73-B- 12A							
3	BEARING CUP ASSEMBLY		73-B-12B							(c)
4	BEARING CUP ASSEMBLY (ALT.)		73-B-110A							
5	HUB AND VANE ASSEMBLY		73-B- 4P							(n)
6	MOVABLE GEAR ASSEMBLY		73-B-13A					365.8		
7	PLUNGER ASSEMBLY (ALTERNATIVE)		73-B- 5T							
8	PRIMER DETONATOR MI4, .025 SEC. DELAY	1	73-B- 69A							
9	STATIONARY GEAR ASSEMBLY		73-B-13D					537.9		
10	TAG ASSEMBLY		73-B- 5E							
11	VANE ASSEMBLY		73-B- 4M							(n)
12	VANE ASSEMBLY (ALTERNATIVE)		73-B-129A							
13										
14	PULL RING AND TAG ASSEMBLY		73-B-5D							
15	BALL	15	73-B-13K		STAINLESS STEEL		COMMERCIAL	3.9		(u)(w)
16	BODY	1	73-B- 5A	TUBING	STEEL, TYPE I, II, III OR IV	WD1015 TO 1035	57-180			(y)(z)
17	BODY (ALTERNATIVE)		73-B-110E	BAR	STEEL	FSX1314	QQ-S-671			(y)(pa)
18	BODY, PLUNGER	1	73-B- 5S	ROD	BRASS	"B", HALF HARD	QQ-B-611			(s)
19										
20	CAP, BODY	1	73-B- 4E	BAR	STEEL	FSX1314	QQ-S-671	1531.2		(a)(z)
21	CARRIER, MOVABLE GEAR	1	73-B-13C	BAR	STEEL	FSX1314	QQ-S-671	291.2		(a)
22	CARRIER, STATIONARY GEAR	1	73-B-13F	BAR	STEEL	FSX1314	QQ-S-671	402.6		(a)(d)
23	CUP, BEARING	1	73-B-12C	BAR	STEEL	FSX1314	QQ-S-671	1100.0		(a)(c)
24	CUP, BEARING (ALTERNATIVE)		73-B-110B	BAR	STEEL	FSX1314	QQ-S-671	840.0		(a.(pa)
25	CUP, STEM	1	73-B-12L	SHEET	STEEL	WD1010	57-136	900.0		
26										
27	EYELET	2	73-B-12F	STRIP	STEEL	WD1010	57-136	16.0		(c)
28										
29	GEAR, MOVABLE	1	73-B-13B	STRIP	BRASS, COMMERCIAL	ROCKWELL B-34 TO B-65	QQ-B-611	74.6		(e)(a)
30	GEAR, STATIONARY	1	73-B-13E	STRIP	BRASS, COMMERCIAL	ROCKWELL B-34 TO B-65	QQ-B-611	39.1		(e)(e)
31	GUIDE, STEM	1	73-B-12M	ROD	BRASS, COMMERCIAL	"B", HALF HARD	QQ-B-611	219.4		(q)
32										
33	HUB, VANE	1	73-B-4R	TUBING	STEEL, TYPES I, II, III OR IV	WD1010 TO 1020	57-180	380.0		(n)(d)
34										
35	NUT, ADJUSTING	1	73-B-12G	BAR	STEEL	FS X1314	QQ-S-671	289.0		(a)
36	NUT, LOCK	1	73-B-12K	ROD	BRASS, COMMERCIAL	"B", HALF HARD	QQ-B-611	52.5		(q)
37	NUT, VANE	1	73-B- 4S	TUBING	STEEL, TYPES I, II, III OR IV	WD1010 TO 1020	57-180	1150.0		(n)(q)
38	NUT, VANE (ALTERNATIVE)		73-B-129C	STRIP	STEEL	WD1010 OR WD1015	57-136			
39	NUT, VANE (ALTERNATIVE)		73-B-129E		STEEL	WD1010 TO 1020	57-136			
40	PIN, SAFETY, PULL RING	1	73-B-5L	5/64 X 1.	STEEL COTTER PIN		COMMERCIAL			
41	PIN, COTTER, HEAD	1	73-B- 3C	3/32 X 3/4	STEEL		COMMERCIAL	7.0		
42	PIN, COTTER, TAG	1	73-B- 5F	3/32 X 1 1/4	STEEL		COMMERCIAL	26.7		
43	PIN, EYELET	2	73-B-12E	ROD	BRASS, COMMERCIAL	"B", HALF HARD	QQ-B-611			(q)(c)
44	PIN, EYELET (ALTERNATIVE)		73-B-110D	BAR	STEEL	FS X1314	QQ-S-671	13.0		(a)(pa)
45	PIN, FIRING, PLUNGER	1	73-B- 5R		STEEL		COMMERCIAL			(s).(p)
46	PIN, LOCK	2	73-B- 4H	BAR	STEEL	FS 1015 TO 1035	QQ-S-671	.7		
47	PIN, PLUNGER	1	73-B- 4G	BAR	STEEL	FS X1314	QQ-S-671	2.9		(m)
48	PIN, SAFETY	1	73-B-12N	ROD	STEEL	FS 1112 OR FS X1112	QQ-S-671			(q)(k)
49	PIN, SAFETY (ALTERNATIVE)		73-B-13M	ROD	STEEL	FS 1010 TO 1020	QQ-S-671			
50	PINION	1	73-B-12D	BAR	TOOL STEEL	N.S.C.-90	57-108	29.0		(g)
51	PLUNGER	1	73-B- 4F	ROD	BRASS, COMMERCIAL	"B", HALF HARD	QQ-B-611	1609.1		(r)
52	RING, PULL	1	73-B- 5G	WIRE	STEEL, TYPE I	WD1020	48-5			
53	RETAINER	1	73-B-13H	ROD	BRASS, COMMERCIAL	"B", HALF HARD	QQ-B-611	73.3		(q)
54	RETAINER, SPRING	1	73-B- 5N	STRIP	STEEL, COLD ROLLED	WD1020 TO WD1045	57-136			
55	RETAINER, BALL		73-B-129F	STRIP	STEEL, CORROSION RESISTING	CLASS 2, 4, 5 OR 6	QQ-S-766			(d)
56	SCREW, DRIVE	1	73-B- 4N	.073 (NO.0) X 1/8	STEEL		COMMERCIAL			(b)(n)
57	SEAL, CAR	1	73-B- 3B		LEAD		COMMERCIAL	175.0		
58	SHAFT, PINION	1	73-B-12H	BAR	STAINLESS STEEL	CLASS 6, TYPE E	QQ-S-763	19.3		
59	SLEEVE, BEARING CUP	1	73-B-110C	SHEET	STEEL	WD1010 TO 1020	57-136	443.0		(pa)
60	SPRING	1	73-B- 5C	WIRE	STEEL (CARBON), MUSIC SPRING	COMP'N	QQ-W-470	8.6		
61	STEM	1	73-B- 3F	BAR	STEEL	FS X1335	QQ-S-671	567.0		(a)
62	STOP, CARRIER	1	73-B-13G	BAR	STEEL	FS X1314	QQ-S-671	96.2		(a)
63	TAG, PULL RING	1	73-B-5M	SIZE NO.1	MANILA PAPER	TYPE "B"	UU-T-81			
64	TAG	1	73-B- 5H	SIZE NO.1	MANILA PAPER	TYPE "B"	UU-T-81	11.0		
65	TAG, SEAL, CAR	1	73-B- 5K	SIZE NO.1	MANILA PAPER	TYPE "B"	UU-T-81	11.0		
66	TUBE	1	73-B- 3E	TUBING	STEEL, TYPE I, II, III OR IV	WD1015 TO 1035	57-180	1200.0		
67										
68	VANE	1	73-B- 4Q	SHEET	STEEL	WD1010 TO 1020	57-136	875.0		(n)

LIST OF PARTS

LINE NO.	NAME OF PART	NUMBER REQD PER COMPONENT	PIECE-MARK	MATERIAL: SIZE OR FORM	MATERIAL: KIND	MATERIAL: GRADE	MATERIAL: SPEC. NUMBER	APPROXIMATE UNIT WEIGHT (GRAINS)	APPROX. GROSS WT. OF RAW STOCK PER ROUND ASSEMBLIES	REMARKS
69	WINE (ALTERNATIVE)		73-B-129B	SHEET	STEEL	WD1010 OR WD1015	57-136			
70										
71	WASHER, LOCK	1	73-B- 4T		SPRING STEEL		COMMERCIAL			(n)(x)
72	WASHER, LOCK (ALTERNATIVE)		73-B-129D		SPRING STEEL		COMMERCIAL			(x)
73	WIRE	1	73-B- 5R	WIRE	STEEL		COMMERCIAL			(f)
74					LACQUER ENAMEL, RED	I	JAN-L-73			(z)
75					GRAPHITE	COLLOIDAL	COMMERCIAL			
76					INK, PRINTER'S, BLACK		COMMERCIAL			
77					VARNISH, PHENOL FORMALDEHYDE RESIN		3-167			
78										
79										

(a)-ALTERNATIVE MATERIAL:-STEEL, FS 1015 TO FS 1035, FS 1115, FS X1315, OR FS X1335, COLD DRAWN, SPEC. QQ-S-671.
(b)-PARKER-KALON, TYPE "U" OR EQUAL.
(c)-NOT REQUIRED WHEN BEARING CUP ASSEMBLY (ALTERNATIVE) 73-B-110A IS USED.
(d)-ALTERNATIVE MATERIAL:-STEEL, STRIP, WD1010 TO WD1020, COLD ROLLED, SPEC. 57-136.
(e)-ALTERNATIVE MATERIAL:-BRASS, LEADED, STRIP, CLASS B, ROCKWELL HARDNESS B-34 TO B-65, SPEC. 57-161-3.
(f)-ALTERNATIVE MATERIAL:-TWINE, COTTON, NO. 12, SPEC. UU-T-81.
(g)-ALTERNATIVE MATERIAL:-STEEL, FS X1335, CASE HARDENED TO C-45-C-55 ROCKWELL, SPEC. QQ-S-671.
(h)-ALTERNATIVE MATERIAL:-STEEL, BAR, FS 1035 TO FS 1045, COLD DRAWN, SPEC. QQ-S-671.
(k)-NOT REQUIRED WHEN PIN, SAFETY (ALTERNATIVE) 73-B-13M IS USED.
(l)-NOT REQUIRED WHEN BODY (ALTERNATIVE) 73-B-110E IS USED.
(m)-ALTERNATIVE MATERIAL:-STEEL, FS 1010 TO FS 1035, FS 1115 FS X1315 OR FS X1335, COLD DRAWN, SPEC. QQ-S-671.
(n)-NOT REQUIRED WHEN VANE ASSEMBLY (ALTERNATIVE) 73-B-129A NUT, VANE (ALTERNATIVE) 73-B-129E IS USED.
(p)-DRIVE SCREW, SHAKEPROOF OR EQUAL.
(q)-ALTERNATIVE MATERIAL:-STEEL, FS 1015 TO FS 1035, FS 1115, FS X1314, FS X1315, OR FS X1335, COLD DRAWN, SPEC. QQ-S-671
(r)-NOT REQUIRED WHEN PLUNGER ASSEMBLY (ALTERNATIVE) 73-B-5T IS USED.
(s)-NOT REQUIRED WHEN PLUNGER 73-B-4F IS USED.
(t)-ALTERNATIVE MATERIAL:-COMMERCIAL BRASS, ROD COMPOSITION "B", ROCKWELL B-34 TO B-65, SPEC. QQ-B-611.
(u)-ALTERNATIVE MATERIAL:-BEARING STEEL, COMMERCIAL.
(w)-SUBSTITUTE ASSEMBLY MAY BE MADE USING 6 BALLS AND RETAINER, BALL 73-B-129F INSTEAD OF 15 BALLS, WHEN SUFFICIENT BALLS ARE NOT AVAILABLE.
(x)-SHAKEPROOF OR EQUAL.
(y)-ALTERNATIVE MATERIAL:-STEEL, FS 1015 TO FS 1035, FS 1115 OR FS X1315, COLD DRAWN, SPEC. QQ-S-671.
(z)-ALTERNATIVE MATERIAL:-ENAMEL, RED, GRADE I, SPEC. JAN-E-74.

(pa) PROTECTIVE FINISH:-TYPE I, CLASS TS, RS OR RSC, SPEC 57-0-2.

10-28-'41
10-28-'41
10-28-'41
10-28-'41
10-28-'41

LINE NO.	LIST OF SPECIFICATIONS	SPEC. NUMBER *	REQUIRED BY
1	AMMUNITION, EXCEPT SMALL ARMS AMM., GEN. SPEC. FOR	50-0-1	DRG. 73-B-3
2	ENAMEL, LUSTRELESS, QUICK-DRYING	JAN-E-74	DRG. 73-B-5
3	BRASS, COMMERCIAL; BARS, PLATES, RODS, SHAPES, SHEETS, & STRIP	QQ-B-611	DRG. 73-B-4
4	BRASS, LEADED, STRIP	57-161-3	DRG. 73-B-13
5	FUZES, BOMB, TAIL, AN-M100A2, AN-M101A2, AN-M102A2, M160, M161 AND M162,		
6	LOADING, ASSEMBLING AND PACKING	50-1-1.	DRG. 73-B-3
7	FUZES, BOMB, TAIL, AN-M100A2, AN-M101A2, AN-M102A2, M160, M161 AND M162,		
8	METAL PARTS FOR	50-80-5	DRG. 73-B-3
9	METALS; GENERAL SPECIFICATION FOR INSPECTION OF	QQ-M-151	QQ-B-611
10	LACQUER ENAMEL, LUSTRELESS	JAN-L-73	DRG. 73-B-5
11	PAPER; GENERAL SPECIFICATIONS	UU-P-31	UU-T-81
12	STEEL, CORROSION RESISTING, PLATES, SHEETS, ETC.	QQ-S-766	DRG. 73-B-129
13	STEEL, CARBON AND ALLOY, BARS	QQ-S-671	DRG. 73-B-4
14	STEEL, CARBON AND ALLOY; SHEETS AND STRIPS	57-136	DRG. 73-B-4
15	STEEL, CORROSION-RESISTING, BARS AND FORGINGS	QQ-S-763	DRG. 73-B-12
16	STEEL, TOOL; CARBON, ALLOY, AND HIGH SPEED	57-108	DRG. 73-B-12
17	WIRE, STEEL (CARBON), SPRING, MUSIC	QQ-W-470	DRG. 73-B-5
18	PAINTS AND RELATED MATERIALS; GENERAL SPEC. FOR	3-1	JAN-L-73
19	TAGS; SHIPPING AND STOCK	UU-T-81	DRG. 73-B-5
20	TEXTILES; GENERAL SPECIFICATIONS, TEST METHODS	CCC-T-191	UU-T-81
21	TUBING, ROUND, MECH. AND STR.; STEEL, CARBON AND ALLOY, SEAMLESS, ETC.	57-180	DRG. 73-B-5
22	WIRE, SOFT IRON AND STEEL; BARE AND COATED	48-5	DRG. 73-B-5
23	VARNISH, PHENOL FORMALDEHYDE RESIN	3-167	DRG. 73-B-3
24	FINISHES, PROTECTIVE, FOR IRON AND STEEL PARTS	57-0-2	DRG. 73-B-110
25			
26			

* THE SPECIFICATION NUMBERS SHOWN ARE BASIC NUMBERS ONLY. WHEN A SPECIFICATION IS REVISED A LETTER IS AFFIXED TO ITS BASIC NUMBER. SPECIFICATIONS REFERRED TO IN THESE SPECIFICATIONS AND NOT LISTED HEREON, SHALL NOT APPLY.

SUPERSEDES OLD TRACING 73-B-3A
UNDER REVISION DATE OF AUG. 12, 1943.

FUZE, BOMB, TAIL, AN-M100A2. .025 SECOND DELAY. LIST OF PARTS AND LIST OF SPECIFICATIONS.

JULIE 5, 1934

REVISIONS			
12	4-15-43		
13	8-12-43		
14	5-16-44		
15	8-15-45		
16	10-20-48		

CLASS	DIVISION	DRAWING	FILE
73	8	3A	

TOLERANCE ON DIMENSIONS NOT OTHERWISE SPECIFIED
DECIMAL ±
FRACTIONAL ±
ANGULAR ±

DRAFTSMAN E.S. | TRACER E.S. | ENGINEER | CHECKER E.J.S. | SENIOR ENGINEER

DRG. PERTAINS TO
73-B-3

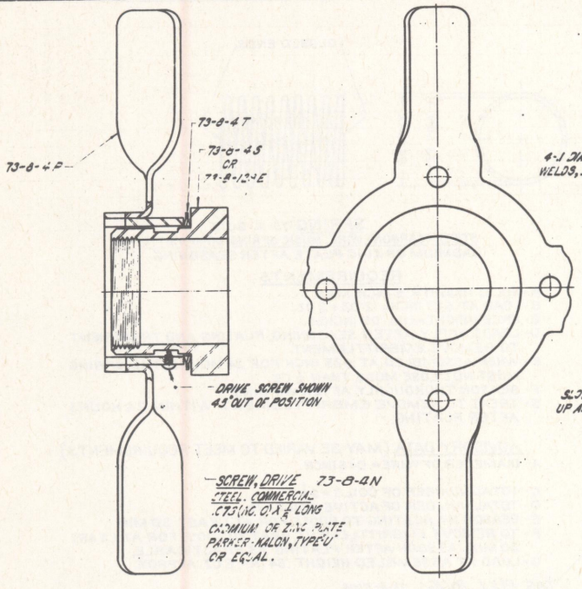
SUBMITTED:
[signature]
MAJ., ORD. DEPT. U.S.A.

EXAMINED:
[signature]
ORD. DEPT. U.S.A.

APPROVED BY ORDER OF THE CHIEF OF ORDNANCE:
[signature]
COL., ORD. DEPT. U.S.A.

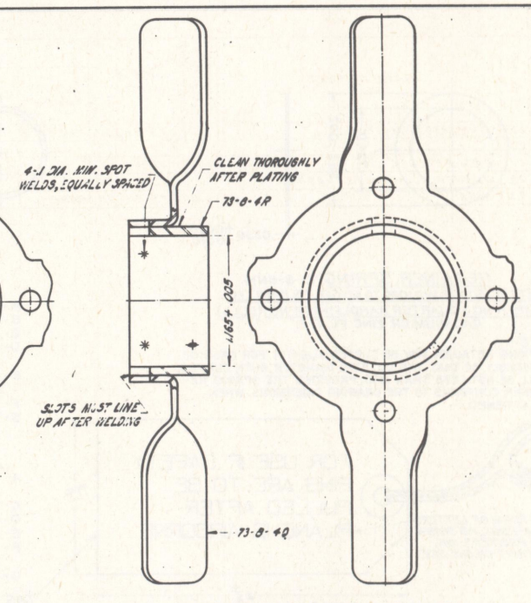
D

ORDNANCE DEPT., U.S.A.

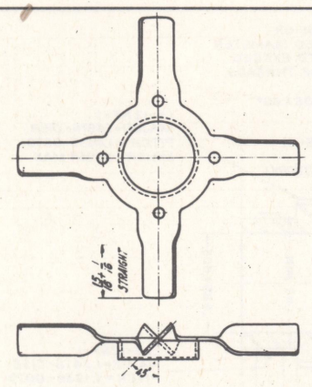


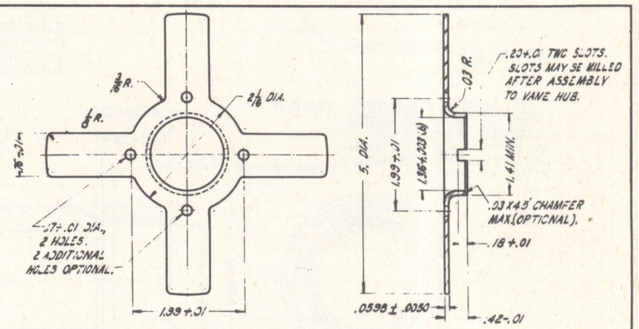
SCREW, DRIVE 73-B-4N
STEEL, COMMERCIAL
.073 (NO. 0) X 1/8 LONG
CADMIUM OR ZINC PLATE
PARKER-KALON, TYPE U OR EQUAL.

VANE ASSEMBLY 73-B-4M14

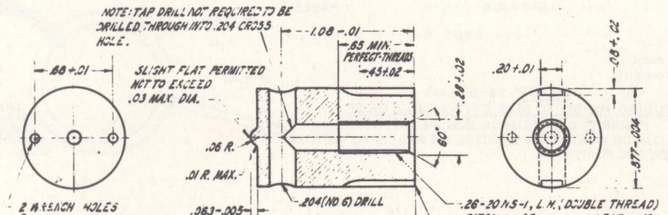


HUB AND VANE ASSEMBLY 73-B-4P.2
CADMIUM OR ZINC PLATE AFTER WELDING



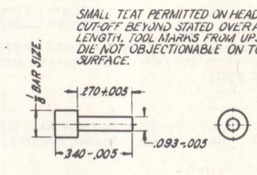


VANE 73-B-4Q12
STEEL, WD 1010 TO 1020, COLD ROLLED.
(b) THESE DIMENSIONS MAY BE CHANGED TO SUIT MANUFACTURE.

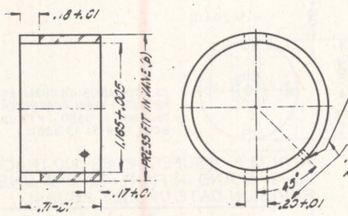


(d) PLUNGER 73-B-4F16
COMMERCIAL BRASS, ROD, COMPOSITION "B", HALF HARD
FINISH "S"

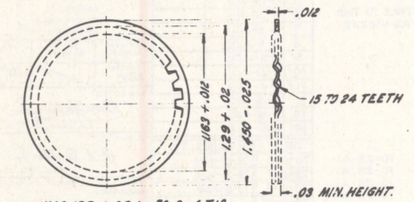
(d) THIS PART PERTAINS ONLY TO THE AN-M100A2, AN-M101A2, AND AN-M102A2 FUZES.



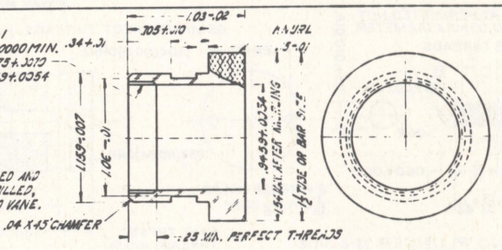
(f) PIN, PLUNGER 73-B-4G17
STEEL, WD X1314, COLD DRAWN.
FINISH "S", CADMIUM OR ZINC PLATE.
ALTERNATIVE MATERIAL:- STEEL, WD X1315 OR WD X1335 OR WD 1010 TO WD 1035 OR WD 1115, COLD DRAWN, FINISH "S", CADMIUM OR ZINC PLATE.
(f) THIS PART DOES NOT APPLY TO M132, M133 AND M134 FUZES.



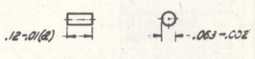
HUB VANE 73-B-4R12
STEEL TUBING, WD 1010 TO 1020, TYPE I, II, III, IV.
FINISH "S"
FOR NOTE (b) SEE VANE 73-B-4Q
ALTERNATIVE MATERIAL:- STEEL STRIP, WD 1010 TO WD 1020, COLD ROLLED. (c)
(c) WHEN HUB VANE IS MADE OF STRIP STEEL, SIDE SEAM NEED NOT BE WELDED, BUT SHALL BE CLOSED SO GAP DOES NOT EXCEED .03.



WASHER, LOCK 73-B-4T12
SPRING STEEL, COMMERCIAL
CADMIUM OR ZINC PLATE
SHAKEPROOF OR EQUAL

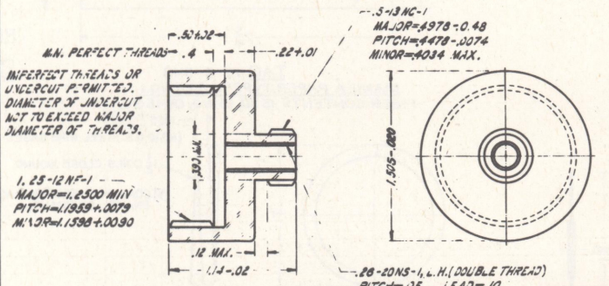


AUT. VANE 73-B-4S.3
STEEL TUBING, WD 1008 TO 1020, TYPE I, II, III, IV.
FINISH "S"
CADMIUM OR ZINC PLATE.
ALTERNATE MATERIAL:- STEEL, WD X1314, OR WD X1315, OR WD X1335, OR WD 1015 TO WD 1035, OR WD 1115, COLD DRAWN.
FINISH "S"
CADMIUM OR ZINC PLATE.



(f) PIN, LOCK 73-B-4H17
STEEL, WD 1015 TO 1035, COLD DRAWN
FINISH "S"

(b) THIS LENGTH TO BE .15-.01 WHEN O.D. .89+.01 DIA TUBE IS USED.



(a) CAP, BODY 73-B-4E17
STEEL, WD X1314, COLD DRAWN
FINISH "S"
ALTERNATIVE MATERIAL:- STEEL, WD X1315 OR WD X1335 OR WD 1015 TO WD 1035 OR WD 1115, COLD DRAWN.
FINISH "S"
CADMIUM OR ZINC PLATE.
REMOVE ALL BURRS.

(a) THIS PART PERTAINS ONLY TO AN-M100A2, AN-M101A2, AN-M102A2, M115, M116 AND M117 FUZES.

SCALE 4, 2, 1

SUPERSEDES OLD TRACINGS 73-B-4 UNDER REVISION DATE OF MAY 16, 1944.

FUZES, BOMB, TAIL, AN-M100A2, AN-M101A2, AN-M102A2, M115, M116, M117, M121, M122, M132, M133, M134, M137, M156, M160, M161 AND M162. DETAILS.

JUNE 3, 1934

REVISIONS			
14	5-20-43		
15	5-16-44		
16	6-5-45		
17	8-15-45		

DRG. PERTAINS TO	
73-B-3	73-B-153
73-B-7	73-B-154
73-B-8	73-B-165
73-B-72	73-B-298
73-B-159	73-B-359
73-B-161	73-B-299
73-B-163	
73-B-181	
73-B-183	
73-B-199	

CLASS	DIVISION	DRAWING	FILE
73	8	4	

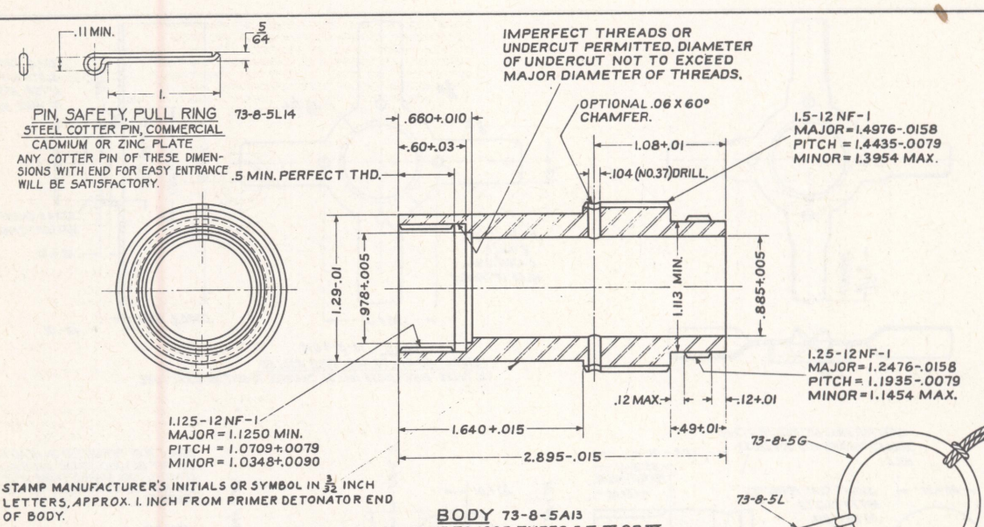
TOLERANCE ON DIMENSIONS NOT OTHERWISE SPECIFIED
DECIMAL ±
FRACTIONAL ±
ANGULAR ±

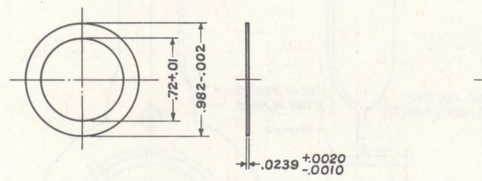
D'FTSMAN	TRACER	ENGINEER
Exempt	Exempt	
CHECKER NWF		PRINCIPAL ENGINEER [illegible]

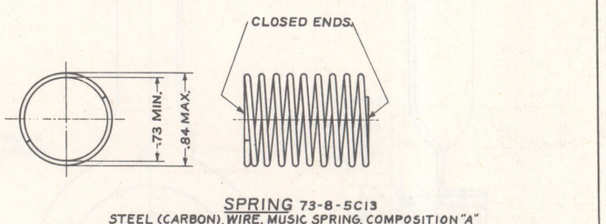
SUBMITTED: [signature] LT. COL., ORD. DEPT. U. S. A.
EXAMINED: H. L. Beckman ORD. DEPT. U. S. A.
APPROVED BY ORDER OF THE CHIEF OF ORDNANCE: C. S. Ward by R. A. COL., ORD. DEPT., U. S. A.

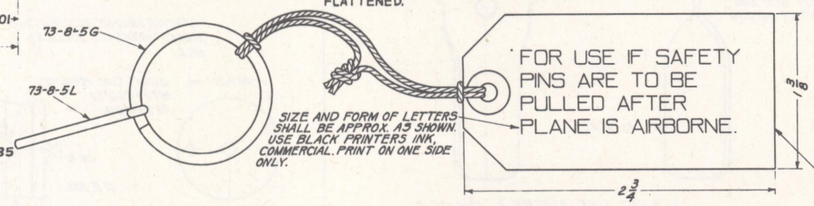
D

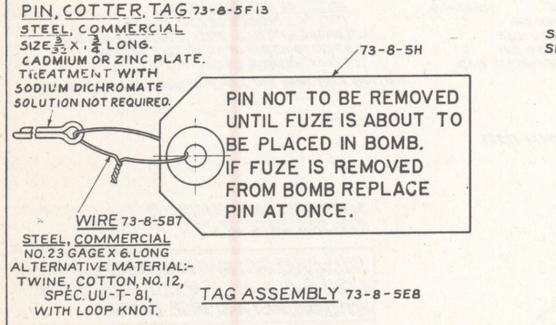
ORDNANCE DEPT., U. S. A.

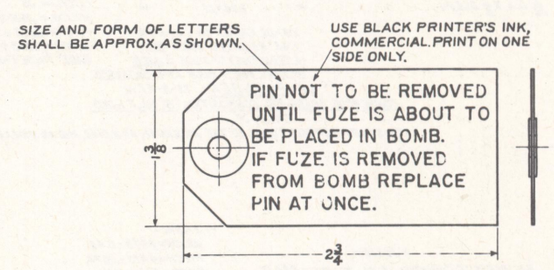


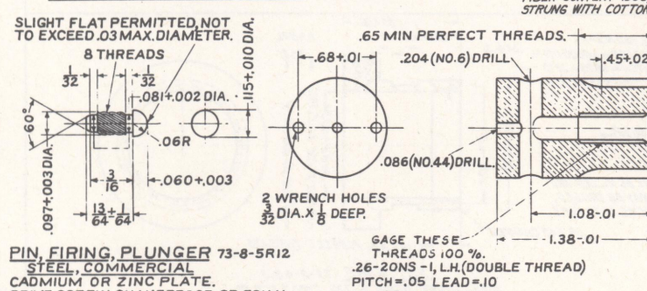






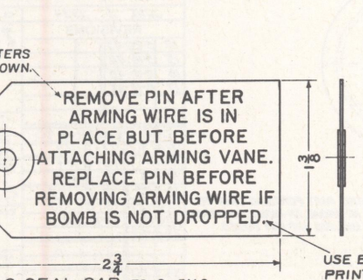


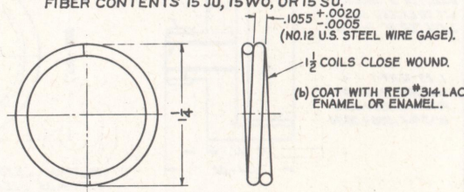


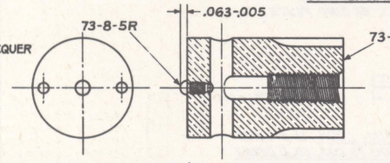


WITH 73-8-71 SUPERSEDES OLD TRACING 73-8-5 AND IN PART 73-8-6 UNDER REVISION DATE OF JULY 28, 1941.

FUZES, BOMB, TAIL, AN-M100A2, AN-M101A2, AN-M102A2, M160, M161 AND M162. DETAILS.







(a) THESE PARTS PERTAIN ONLY TO THE AN-M100A2, AN-M101A2 AND AN-M102A2 FUZES.

JUNE 5, 1934	CLASS	DIVISION	DRAWING	FILE
	73	8	5	

REVISIONS

3	10-30-39		
4	7-28-41		
5	10-15-41		
6	11-26-41		
7	5-6-42		
8	5-9-42		
9	8-5-42		
10	9-21-42		
11	1-4-43		
12	4-15-43		
13	5-16-44		
14	8-15-45		

TOLERANCE ON DIMENSIONS NOT OTHERWISE SPECIFIED
DECIMAL ±
FRACTIONAL ±
ANGULAR ±

D'FTSMAN	TRACER	LDG D'FTSMAN
N.W.F.	N.W.F.	

CHECKER — CHIEF D'FTSMAN ASST.

SUBMITTED:
CAPT., ORD. DEPT. U.S.A.

EXAMINED:
MAJ., ORD. DEPT. U.S.A.

APPROVED BY ORDER OF THE CHIEF OF ORDNANCE.
LT. COL., ORD. DEPT. U.S.A.

DRG. PERTAINS TO	
73-8-3	73-8-404
73-8-7	73-8-406
73-8-8	73-8-359
73-8-72	
73-8-181	
73-8-183	

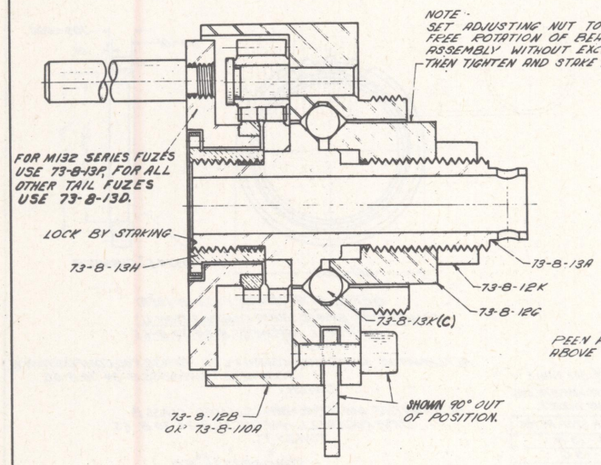
10-28-41
10-28-41
10-28-41
10-28-41
10-28-41

REMOVE ALL BURRS.

SCALE:- 2/1

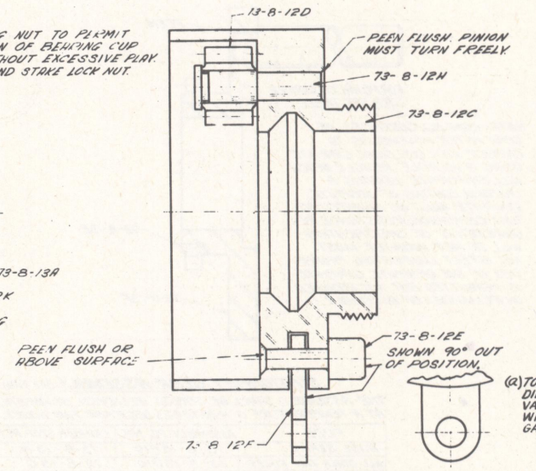
D

ORDNANCE DEPT., U.S.A.



ARMING HEAD ASSEMBLY 73-B-12HA

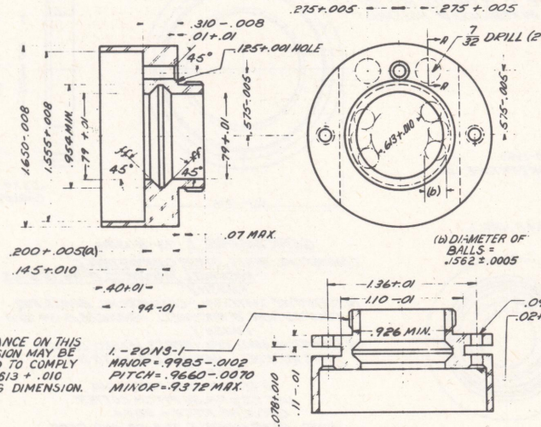
(c) SUBSTITUTE ASSEMBLY MAY BE MADE, USING 6 BALLS AND RETAINER, BALLS, 73-B-129F INSTEAD OF 15 BALLS, WHEN SUFFICIENT BALLS ARE NOT AVAILABLE.

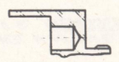


BEARING CUP ASSEMBLY 73-B-12B11

(a) TOLERANCE ON THIS DIMENSION MAY BE VARIED TO COMPLY WITH .613 + .010 GAGING DIMENSION.

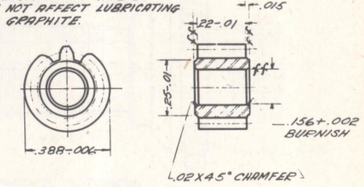
NOTE:- COAT ALL SURFACES OF PINION WITH COLLOIDAL GRAPHITE USING A VOLATILE VEHICLE WHICH WILL EVAPORATE LEAVING A UNIFORM COATING OF GRAPHITE. GRAPHITE MUST BE INHIBITED SO THAT CORROSION RESISTANCE REQUIREMENTS OF SPECIFICATION WILL BE MET. INHIBITER MUST NOT AFFECT LUBRICATING PROPERTIES OF THE GRAPHITE.





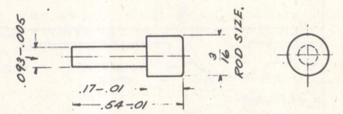
SECTION B-B

CUP, BEARING 73-B-12C14
STEEL, WD-X1314, COLD DRAWN
FINISH "S". CADMIUM OR ZINC PLATE
ALTERNATIVE MATERIAL:- STEEL, WD-X1315, OR WD-X1335, OR WD1015 TO WD1035, OR WD1115, COLD DRAWN, FINISH "S", CADMIUM OR ZINC PLATE.

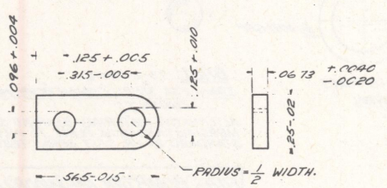


PINION 73-B-12D13
TOOL STEEL N.S.C.-90
FINISH "S"
HARDEN TO C-45 TO C-55 ROCKWELL.
CADMIUM OR ZINC PLATE.

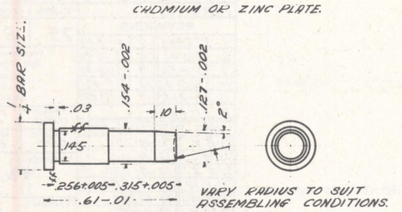
STANDARD 22½° P.A.
12 TEETH - 36 PITCH - .333 PITCH DIA.
ALTERNATIVE MATERIAL:- STEEL, WD-X1335 CASE HARDENED TO C-45 - C-55 ROCKWELL.
CADMIUM OR ZINC PLATE.



PIN, EYELET 73-B-12E10
COMMERCIAL BRASS, ROD, COMPOSITION "B", HALF HARD
FINISH "S"
ALTERNATIVE MATERIAL:- STEEL, WD-X1314, OR WD-X1315, OR WD-X1335 OR WD1015 TO WD1035, OR WD1115, COLD DRAWN, FINISH "S", CADMIUM OR ZINC PLATE.

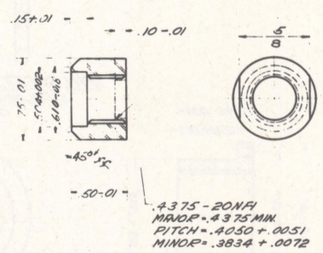


EYELET 73-B-12F5
STEEL, WD1010
DULL FINISH
CADMIUM OR ZINC PLATE.

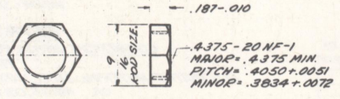


SHAFT, PINION 73-B-12H14
FREE MACHINING STEEL, STAINLESS, CLASS 6, TYPE E
FINISH "S"

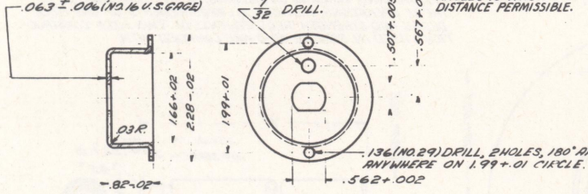
NOTE:- COAT ALL SURFACES OF PINION SHAFT WITH COLLOIDAL GRAPHITE USING A VOLATILE VEHICLE WHICH WILL EVAPORATE LEAVING A UNIFORM COATING OF GRAPHITE. GRAPHITE MUST BE INHIBITED. INHIBITER MUST NOT AFFECT LUBRICATING PROPERTIES OF THE GRAPHITE.



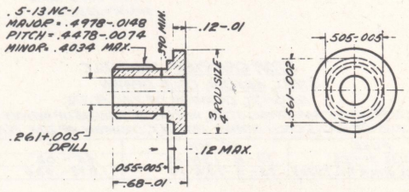
NUT, ADJUSTING 73-B-12G14
STEEL, WD-X1314, COLD DRAWN
FINISH "S". CADIUM OR ZINC PLATE.
ALTERNATIVE MATERIAL:- STEEL, WD-X1315 OR WD-X1335, OR WD1015 TO WD1035, OR WD1115, COLD DRAWN, FINISH "S", CADMIUM OR ZINC PLATE.



NUT, LOCK 73-B-12K10
COMMERCIAL BRASS, ROD, COMPOSITION "B", HALF HARD
FINISH "S"
ALTERNATIVE MATERIAL:- STEEL, WD-X1314, OR WD-X1315, OR WD-X1335, OR WD1015 TO WD1035, OR WD1115, COLD DRAWN, FINISH "S", CADMIUM OR ZINC PLATE.



CUP, STEM 73-B-12L14
STEEL, WD1010
BRIGHT SOFT ANNEALED.
CADMIUM OR ZINC PLATE



(d) GUIDE, STEM 73-B-12M15
COMMERCIAL BRASS, ROD, COMPOSITION "B", HALF HARD
FINISH "S"
ALTERNATIVE MATERIAL:- STEEL, WD-X1314, OR WD-X1315, OR WD-X1335, OR WD1015 TO WD1035, OR WD1115, COLD DRAWN, FINISH "S", CADMIUM OR ZINC PLATE.
REMOVE ALL BURRS.

(d) THIS PART PERTAINS ONLY TO AN-M100A2, AN-M101A2, AN-M102A2, M132, M133, M134, M160, M161 AND M162 FUZES.

APPROVED STANDARD
by
Date
10-28-41
10-28-41
10-28-41
10-28-41
10-28-41

FUZES, BOMB, TAIL, AN-M100A2, AN-M101A2, AN-M102A2, M115, M116, M117, M121, M122, M132, M133, M134, M137, M156, M160, M161 AND M162. DETAILS.

FEB. 8, 1937	CLASS	DIVISION	DRAWING	FILE
REVISIONS	73	8	12	

1	9-29-38	10	1-4-43
2	7-28-41	11	4-15-43
3	10-15-41	12	5-20-43
4	11-26-41	13	5-16-44
5	1-9-42	14	5-5-45
6	5-6-42	15	8-15-45
7	5-9-42		
8	8-5-42		
9	9-21-42		

TOLERANCE ON DIMENSIONS NOT OTHERWISE SPECIFIED
DECIMAL ±
FRACTIONAL ±
ANGULAR ±

DRAFTSMAN	J.A.F.	ENGINEER	
CHECKER		ENGINEER	M.T.

DRG. PERTAINS TO

73-B-8	73-B-165
73-B-72	73-B-298
73-B-169	73-B-359
73-B-161	73-B-299
73-B-163	73-B-407
73-B-3	73-B-199
73-B-7	73-B-154
73-B-181	
73-B-183	

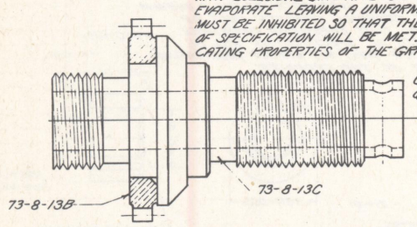
SUBMITTED:
LT. COL., ORD. DEPT., U. S. A.
EXAMINED:
COL., ORD. DEPT., U. S. A.
APPROVED BY ORDER OF THE CHIEF OF ORDNANCE:
LT. COL., ORD. DEPT., U. S. A.

D

SCALE, INCHES, 1, 2, 4

ORDNANCE DEPT. U. S. A.

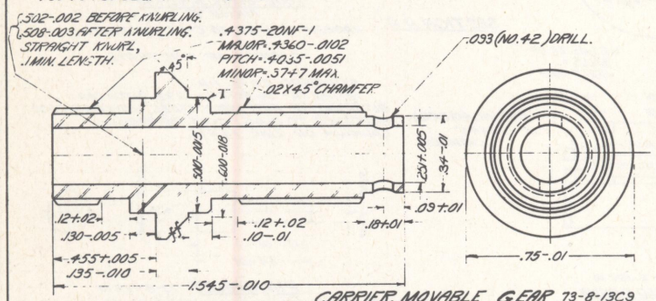
NOTE:- COAT ALL SURFACES OF GEAR AFTER ASSEMBLING TO CARRIER WITH COLLOIDAL GRAPHITE USING A VOLATILE VEHICLE WHICH WILL EVAPORATE LEAVING A UNIFORM COATING OF GRAPHITE. GRAPHITE MUST BE INHIBITED SO THAT THE CORROSION RESISTANCE REQUIREMENTS OF SPECIFICATION WILL BE MET. INHIBITER MUST NOT AFFECT LUBRICATING PROPERTIES OF THE GRAPHITE.



GRAPHITE IS PERMITTED BUT NOT REQUIRED ON REMAINDER OF ASSEMBLY.

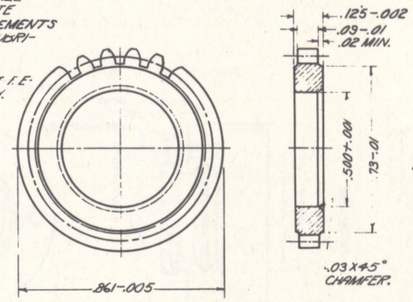
MOVABLE GEAR ASSEMBLY 73-8-13A9

THE ASSEMBLY SHALL BE STRESS RELIEVED BY ANNEALING AT A TEMPERATURE OF 400 TO 425 DEG. F. FOR TWO HOURS.



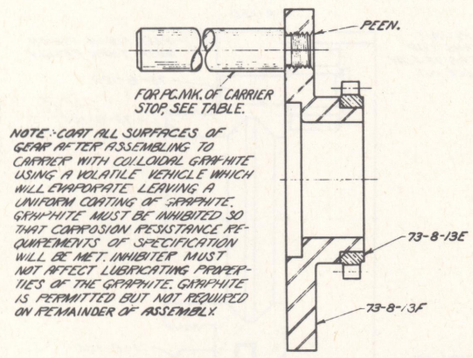
CARRIER, MOVABLE GEAR 73-8-13C9

STEEL, WD X1314, COLD DRAWN, FINISH $\frac{1}{8}$". CADMIUM OR ZINC PLATE.
ALTERNATIVE MATERIAL:- STEEL, WD X1315 OR WDX1335 OR WD1015 TO WD1035 OR WD1115, COLD DRAWN, FINISH $\frac{1}{8}$", CADMIUM OR ZINC PLATE.



GEAR, MOVABLE 73-8-13B10

COMMERCIAL BRASS, STRIP, COMPOSITION "C".
ROCKWELL HARDNESS, B-34 TO B-65.
FINISH $\frac{1}{8}$".
ALTERNATIVE MATERIAL:- COMMERCIAL BRASS, ROD, COMPOSITION "B", ROCKWELL HARDNESS, B-34 TO B-65.
FINISH $\frac{1}{8}$".
ALTERNATIVE MATERIAL:- BRASS, LEADED, CLASS B, STRIP, ROCKWELL HARDNESS, B-34 TO B-65.
FINISH $\frac{1}{8}$".
30 TEETH - .806 PITCH DIA.
USE 22½° P.A., 36 PITCH CUTTER.
CIRCULAR PITCH = .0844.
NOTE: GEAR, MOVABLE, 73-8-13B, AND GEAR, STATIONARY, 73-8-13E, SHALL OPERATE FREELY WITH PINION, 73-8-12D, ON A CENTER DISTANCE OF .570.

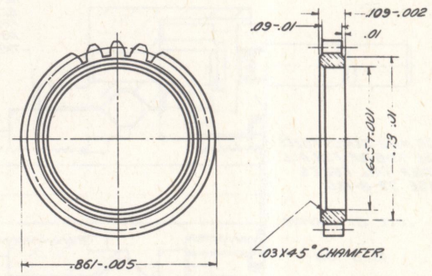


NOTE:- COAT ALL SURFACES OF GEAR AFTER ASSEMBLING TO CARRIER WITH COLLOIDAL GRAPHITE USING A VOLATILE VEHICLE WHICH WILL EVAPORATE LEAVING A UNIFORM COATING OF GRAPHITE. GRAPHITE MUST BE INHIBITED SO THAT CORROSION RESISTANCE REQUIREMENTS OF SPECIFICATION WILL BE MET. INHIBITER MUST NOT AFFECT LUBRICATING PROPERTIES OF THE GRAPHITE. GRAPHITE IS PERMITTED BUT NOT REQUIRED ON REMAINDER OF ASSEMBLY.

STATIONARY GEAR ASSEMBLY SEE TABLE

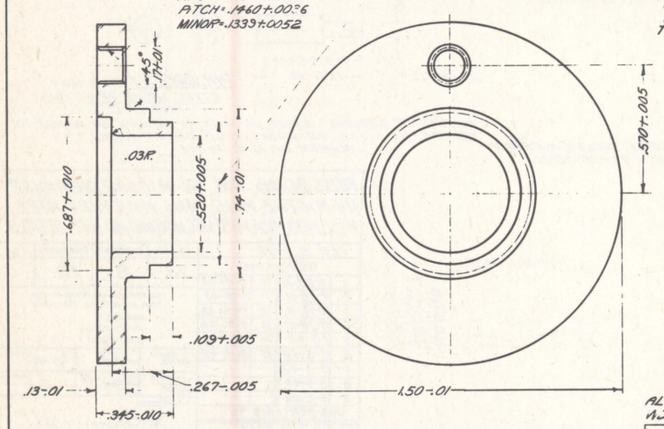
THE ASSEMBLY SHALL BE STRESS RELIEVED BY ANNEALING AT A TEMPERATURE OF 400 TO 425 DEG. F. FOR TWO HOURS.

FUZE	ASSEMBLY PC. MK.	CARRIER STOP PC. MK.
M132 SERIES	73-8-13 P10	73-8-13 N
ALL OTHER TAIL FUZES	73-8-13 D10	73-8-13 G



GEAR, STATIONARY 73-8-13E10

COMMERCIAL BRASS, STRIP, COMPOSITION "C".
ROCKWELL HARDNESS, B-34 TO B-65.
FINISH $\frac{1}{8}$".
ALTERNATIVE MATERIAL:- COMMERCIAL BRASS, ROD, COMPOSITION "B", ROCKWELL HARDNESS, B-34 TO B-65.
FINISH $\frac{1}{8}$".
ALTERNATIVE MATERIAL:- BRASS, LEADED, CLASS B, STRIP, ROCKWELL HARDNESS, B-34 TO B-65.
FINISH $\frac{1}{8}$".
STANDARD 22½° P.A.
29 TEETH - .36 PITCH = .806 PITCH DIA.
CIRCULAR PITCH = .0873.

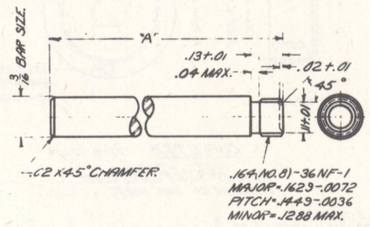


(a) CARRIER, STATIONARY GEAR 73-8-13F10

STEEL, WDX1314, COLD DRAWN.
FINISH $\frac{1}{8}$". CADMIUM OR ZINC PLATE.
ALTERNATIVE MATERIAL:- STEEL, WDX1315 OR WD X1335 OR WD1015 TO WD1035 OR WD1115, COLD DRAWN, FINISH $\frac{1}{8}$", CADMIUM OR ZINC PLATE.
ALTERNATIVE MATERIAL:- STEEL STRIP, WD1010 TO WD1020, COLD ROLLED, FINISH $\frac{1}{8}$", CADMIUM OR ZINC PLATE.

REMOVE ALL BURRS.

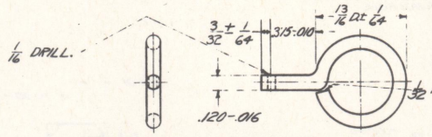
(a) ALTERNATIVE METHOD OF MANUFACTURE: THE STATIONARY GEAR CARRIER MAY BE MADE FROM TWO PARTS JOINED BY SHRINKING, SWAGING, BRAZING OR WELDING, OR ANY COMBINATION OF THESE OPERATIONS, PROVIDED ALL REQUIREMENTS OF ONE-PIECE DESIGN AND STRENGTH REQUIREMENTS OF TWO-PIECE CONSTRUCTION LISTED IN SPEC. 50-80-5 ARE COMPLIED WITH.



STOP, CARRIER SEE TABLE

STEEL, WDX1314, COLD DRAWN
FINISH $\frac{1}{8}$", CADMIUM OR ZINC PLATE.
ALTERNATIVE MATERIAL:- STEEL, WDX1315 OR WDX1335 OR WD1015 TO WD1035 OR WD1115, COLD DRAWN, FINISH $\frac{1}{8}$", CADMIUM OR ZINC PLATE.

FUZE	PC. MK.	"A"
M132 SERIES	73-8-13N 10	.65-.02
ALL OTHER TAIL FUZES	73-8-13G 10	1.875-.020

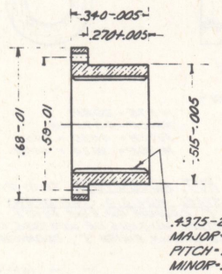


PIN, SAFETY (ALTERNATIVE) 73-8-13M9

STEEL, WD1010 TO WD1020, COLD DRAWN.
CADMIUM OR ZINC PLATE.

BALL 73-8-13K10

STAINLESS STEEL, COMMERCIAL, HARDENED
FINISH $\frac{1}{8}$".
ALTERNATIVE MATERIAL: BEARING STEEL, COMMERCIAL, CHROMIUM PLATE TO WITHSTAND STANDARD 24 HR. SALT SPRAY TEST.



RETAINER 73-8-13H9

COMMERCIAL BRASS, ROD, COMPOSITION "B", HALF-HARD
FINISH $\frac{1}{8}$"
ALTERNATIVE MATERIAL:- STEEL, WDX1314, OR WDX1315 OR WDX1335 OR WD1015 TO WD1035 OR WD1115, COLD DRAWN, FINISH $\frac{1}{8}$", CADMIUM OR ZINC PLATE.

APPROVED STANDARD

BY	DATE
	10-28-41
	10-28-41
	10-28-41
	10-28-41
	10-28-41

SCALE, INCHES 4/1, 2/1

FUZES, BOMB, TAIL, AN-M100A2, AN-M101A2, AN-M102A2, M115, M116, M117, M121, M122, M132, M133, M134, M137, M156, M160, M161 & M162. DETAILS.

FEB. 8, 1937 | CLASS 73 | DIVISION 8 | DRAWING 13 | FILE

REVISIONS			
1	7-28-41	7	4-15-43
2	10-15-41	8	5-20-43
3	5-9-42	9	5-16-44
4	8-5-42	10	5-5-45
5	9-21-42	11	8-15-45
6	1-4-43		

TOLERANCE ON DIMENSIONS NOT OTHERWISE SPECIFIED
DECIMAL ±
FRACTIONAL ±
ANGULAR ±

DRG. PERTAINS TO	
73-8 3	73-8-154
73-8-7	73-8-165
73-8 8	73-8-298
73-8-72	73-8-359
73-8-159	73-8-299
73-8-161	73-8-407
73-8-163	
73-8-181	
73-8-183	
73-8-199	

D'TSMAN Q.B.O. | TRACER J.A.F. | ENG. IN CHG. J.M.S. | CHECKER C.E.W. | CHECKER E.J. | CHIEF D'TSMAN M.T.

SUBMITTED: J. K. Clement, LT. COL., ORD. DEPT. U.S.A.

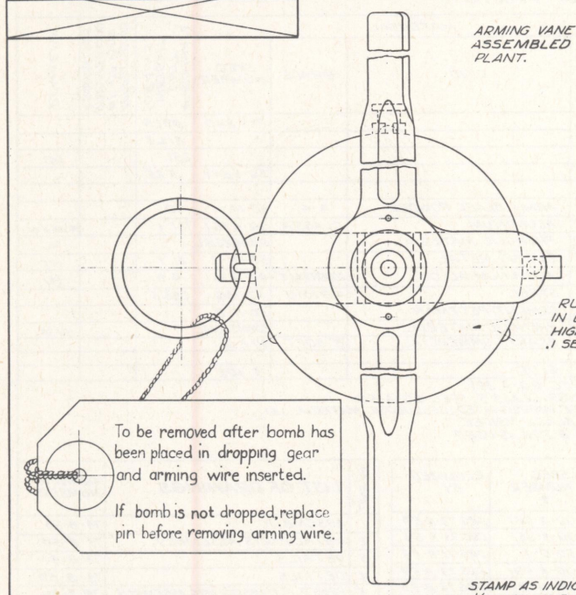
EXAMINED: Geo. P. Bosch, COL., ORD. DEPT. U.S.A.

APPROVED BY ORDER OF THE CHIEF OF ORDNANCE: John B. Gootee, LT. COL., ORD. DEPT. U.S.A.

ORDNANCE DEPT., U.S.A.

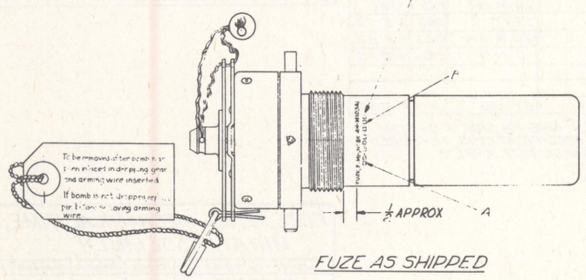
HEAT TREATMENT AND FINAL FINISH

ARMING VANE NOT TO BE ASSEMBLED AT LOADING PLANT.

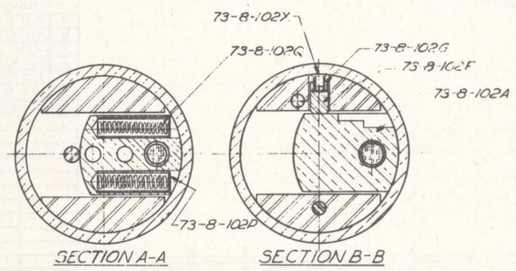


RUBBER STAMP WITH INDELIBLE INK IN LETTERS AND FIGURES APPROX 3/16 HIGH, AN-M103A1 - USED FOR INST. OR .1 SEC DELAY.

STAMP AS INDICATED WITH LETTERS AND FIGURES 1/16 HIGH AND .01 DEEP.
A-LOADER'S LOT NUMBER.
B-DATE (MONTH AND YEAR) LOADED.

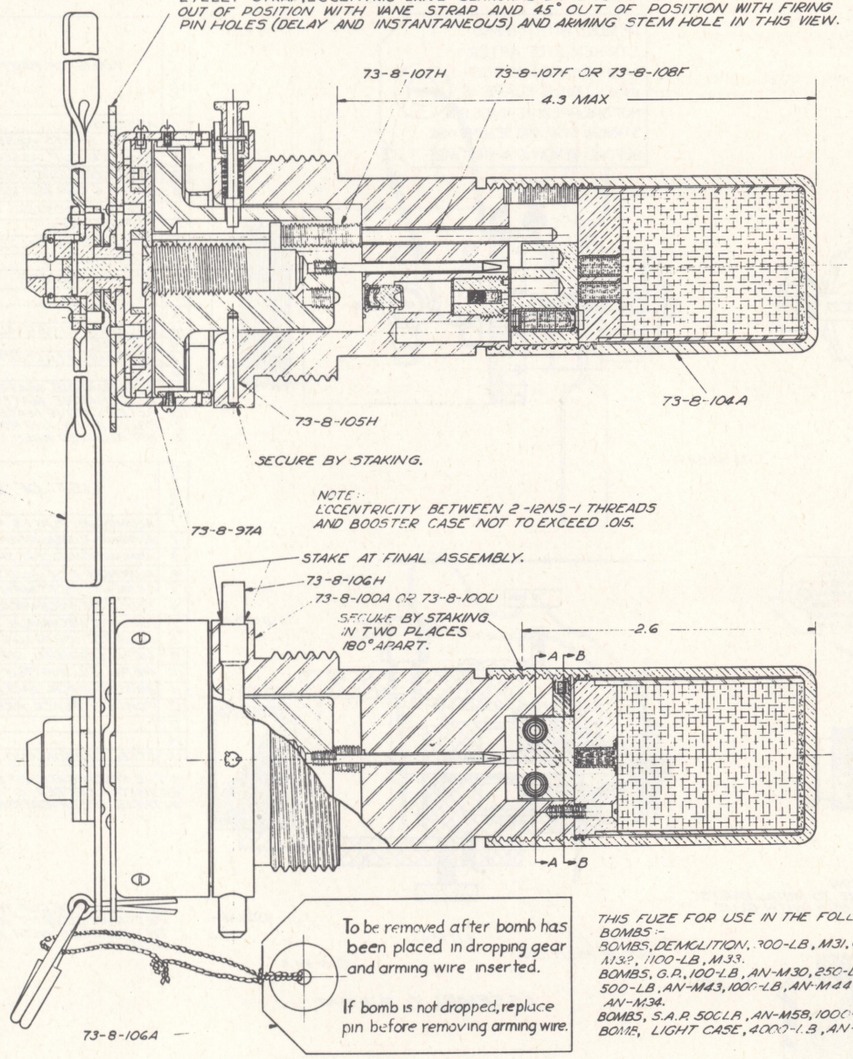


FUZE AS SHIPPED



SECTION A-A SECTION B-B

EYELET STRAP, ECCENTRIC DRIVE GEARS AND DRIVE GEAR BEARING SHOWN 90° OUT OF POSITION WITH VANE STRAP AND 45° OUT OF POSITION WITH FIRING PIN HOLES (DELAY AND INSTANTANEOUS) AND ARMING STEM HOLE IN THIS VIEW.



ASSEMBLY 73-8-14A19
WEIGHT = 3.7 LBS
NOTE:- VANE CUP ASSEMBLY SHOWN 45° OUT OF POSITION.

THIS FUZE FOR USE IN THE FOLLOWING BOMBS:-
BOMBS, DEMOLITION, 300-LB, M31, 600-LB, M32, 1100-LB, M33.
BOMBS, G.P., 100-LB, AN-M30, 250-LB, AN-M57, 500-LB, AN-M43, 1000-LB, AN-M44, 2000-LB, AN-M34.
BOMBS, S.A.P. 500LB, AN-M58, 1000-LB, AN-M59
BOMB, LIGHT CASE, 4000-LB, AN-M56.

0 1 2 3 4 5 6 7 8 9 10 11 INCHES.
0 1 2 3 4 5 INCHES.

SUPERSEDES 73-8-14 WITHOUT CHANGE NOV 10, 1948

PHYSICAL PROPERTIES

Y.P.	
T.S.	
EL. 2	
RED.	
BR.	
ROCK.	

LINE NO.	LIST OF DRAWINGS	DRAWING NUMBER
1	ASSEMBLY	73-8-14
2	LIST OF SPECIFICATIONS	73-8-14A
3	LIST OF PARTS	73-8-14B
4	LIST OF PARTS	73-8-14C
5	DETAILS	73-8-97
6	DETAILS	73-8-98
7	DETAILS	73-8-99
8	DETAILS	73-8-100
9	DETAILS	73-8-101
10	DETAILS	73-8-102
11	DETAILS	73-8-103
12	DETAILS	73-8-104
13	DETAILS	73-8-105
14	DETAILS	73-8-106
15	DETAILS	73-8-107
16	DETAILS	73-8-108
17	DETAILS	73-8-109
18	DETONATOR, M20, ASSEMBLY	73-2-187
19	PRIMER, NEW NO.4, ASSEMBLY	74-2-26
20	CONTAINER, METAL	76-1-262
21	PACKING BOX	76-16-211
22	PACKING AND MARKING OF BOX	20-4-186
23		
24		
25		

NOTICE:- THIS DRAWING SHALL NOT BE USED NOR REPRODUCED EITHER WHOLLY OR IN PART EXCEPT WHEN AUTHORIZED IN CONNECTION WITH UNITED STATES GOVERNMENT PROCUREMENT.

FUZE, BOMB, NOSE, AN-M103A1 ASSEMBLY.

REVISIONS					CLASS	DIVISION	DRAWING	FILE
NOV 21, 1938					7.3	8	14	
19	8-15-43				TOLERANCE ON DIMENSIONS NOT OTHERWISE SPECIFIED			
20	11-10-48				DECIMAL ±			
					FRACTIONAL ±			
					ANGULAR ±			

DRG. PERTAINS TO																									

D'FTSMAN	TRACER	ENGINEER
SSD	REG	
CHECKER		ENGINEER
ACJ		

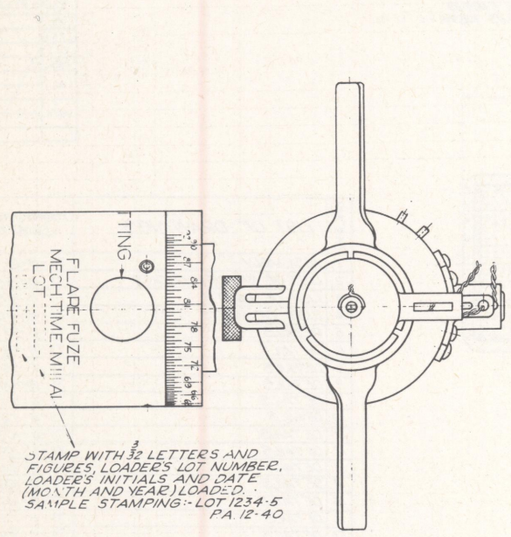
SUBMITTED:
ORD. ENG., ORD. DEPT. U.S.A.

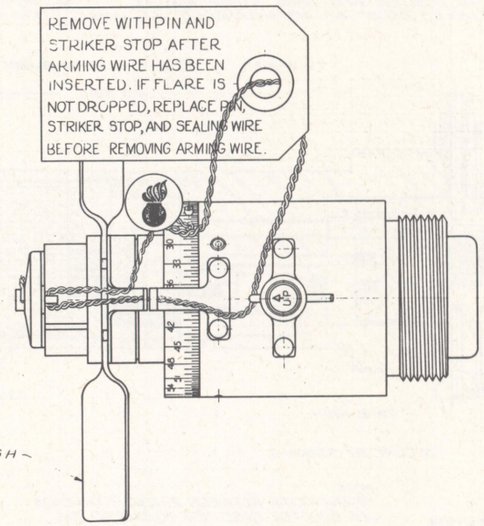
EXAMINED:
COL., ORD. DEPT. U.S.A.

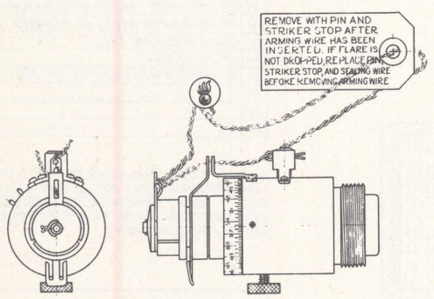
APPROVED BY ORDER OF THE CHIEF OF ORDNANCE:
COL., ORD. DEPT. U.S.A.

D

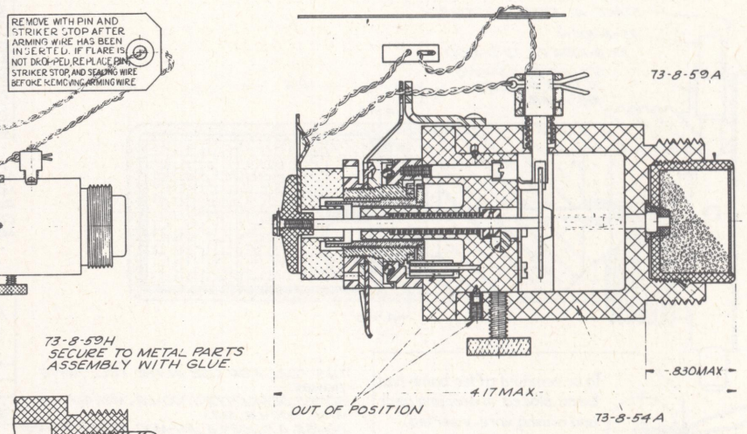
ORDNANCE DEPT., U.S.A.





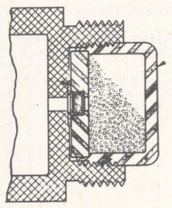


FUZE AS SHIPPED.



ASSEMBLY 73-8-53 A7

73-8-59 H
SECURE TO METAL PARTS ASSEMBLY WITH GLUE



ASSEMBLY (ALTERNATIVE) 73-8-53 B5

COAT BOOSTER CUP THREADS WITH PETTMAN CEMENT AFTER ENGAGING TWO THREADS WITH METAL PARTS ASSEMBLY.

COAT BOOSTER CUP THREADS WITH PETTMAN CEMENT AFTER ENGAGING TWO THREADS WITH METAL PARTS ASSEMBLY.

LIST OF PARTS

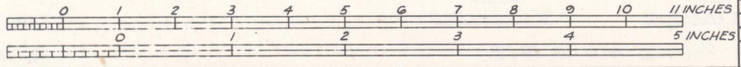
LINE NO.	NAME OF PART	NUMBER REQ'D PER COMPONENT	PIECE-MARK	MATERIAL: SIZE OR FORM	MATERIAL: KIND	MATERIAL: GRADE	MATERIAL: SPEC NUMBER	APPROXIMATE UNIT WEIGHT (GRAINS)	APPROX. GROSS WT. OF RAW STOCK PER 1000 ASSEMBLIES	REMARKS
1	ASSEMBLY		73-8-53A				PXS-840	.89 LB.		
2	METAL PARTS ASSEMBLY	1	73-8-54A					.81 LB.		
3	BOOSTER CUP ASSEMBLY	1	73-8-59A					231.		(e)
4	PRIMER, PERCUSSION, M2G, ASSEMBLY	1	74-2-39A				50-68-1	3.25		
5	BOOSTER CUP ASSEMBLY (ALTERNATIVE)		73-8-59K							
6	CHARGE, BOOSTER	1	73-8-59B		ARMY BLACK POWDER	A-4	50-14-1	70.		
7	CUP, BOOSTER	1	73-8-59C	SHEET	ALUMINUM	CLASS A	QQ-A-561	131.1		(c)(a)(b)
8	CUP, BOOSTER (ALTERNATIVE)		73-8-59F	MOLDED	PHENOLIC MATERIAL		COMMERCIAL			(d,
9	DISC, CLOSING	1	73-8-59D	STRIP	GILDING METAL		57-171-2	21.7		(e)
10	HOLDER, PRIMER	1	73-8-59E	ROD	ALUMINUM ALLOY	CONDITION 'T'	QQ-A-351	4.9		(e)
11	VANE	1	73-8-56H	STRIP	STEEL	WD 1010	57-136	285.5		
12					CEMENT, PETTMAN		50-11-8			
13	HOLDER, PRIMER (ALTERNATIVE)		73-8-59G	MOLDED	PHENOLIC MATERIAL		COMMERCIAL			(c) (d)
14	WASHER		73-8-59H	SHEET	BRASS, COMMERCIAL	B SOFT	QQ-B-611			
15	ASSEMBLY (ALTERNATIVE)		73-8-53B							
16					GLUE		3-102			

(a) ALTERNATIVE MATERIAL:- ALUMINUM ALLOY, CONDITION 'T'; SPEC. QQ-A-351.
(b) ALTERNATIVE MATERIAL:- ALUMINUM BASE-ALLOY; DIE CASTINGS, CLASS 5, SPEC. QQ-A-591.
(c) ALTERNATIVE MATERIAL:- LAMINATED, PHENOL FORMALDEHYDE IMPREGNATED, CELLULOSIC MATERIAL (d)
(d) FILLER, IF ANY, AND MOLD LUBRICANT NOT TO REACT WITH ARMY BLACK POWDER.
(e) NOT REQUIRED WHEN BOOSTER CUP ASSEMBLY (ALTERNATIVE) 73-8-59K IS USED.

LINE NO	LIST OF SPECIFICATIONS	SPEC NUMBER *	REQUIRED BY
1	ALUMINUM; PLATES AND SHEETS	QQ-A-561	DRG 73-8-59
2	ALUMINUM-ALLOY (ALUMINUM-COPPER-MAGNESIUM-MANGANESE); BARS, RODS, ETC.	QQ-A-351	DRG 73-8-59
3	AMMUNITION, EXCEPT SMALL ARMS AMMUNITION, GEN. SPEC. FOR	50-0-1	DRG 73-8-53
4	ALUMINUM-BASE-ALLOY; DIE-CASTINGS	QQ-A-591	DRG 73-8-59
5	CEMENT, PETTMAN	50-11-8	DRG 73-8-53
6	FUZE, NOSE, MECHANICAL TIME, M1I1A1, PARTS FOR	PXS-840-1	DRG 73-8-59
7	FUZE, NOSE, MECHANICAL TIME, M1I1A1, LOADING ASSEMBLY & PACKING	PXS-840	DRG 73-8-53
8	GLUE (FOR USE IN LOADING OF AMMUNITION)	3-102	DRG 73-8-53
9	METALS; GENERAL SPECIFICATION FOR INSPECTION OF	QQ-M-151	QQ-A-561
10	METAL, GILDING (95/5 BRASS) SHEETS AND STRIPS	57-171-2	DRG 73-8-59
11	BRASS, COMMERCIAL, BARS, PLATES, RODS, SHAPES, SHEETS, ETC.	QQ-B-611	DRG 73-8-59
12	POWDER, BLACK, ARMY	50-14-1	DRG. 73-8-59
13			
14			
15	STEEL, CARBON AND ALLOY; SHEETS AND STRIPS	57-136	DRG 73-8-56

* THE SPECIFICATIONS SHOWN ARE BASIC NUMBERS ONLY. WHEN A SPECIFICATION IS REVISED A LETTER IS AFFIXED TO ITS BASIC NUMBER. SPECIFICATIONS REFERRED TO IN THESE SPECIFICATIONS AND NOT LISTED HEREON, SHALL NOT APPLY.

LINE NO	LIST OF DRAWINGS	DRAWING NUMBER
1	ASSEMBLY	73-8-53
2	METAL PARTS ASSEMBLY	73-8-54
3	DETAILS	73-8-56
4	DETAILS	73-8-59
5	PRIMER, PERCUSSION M2G ASSEMBLY	74-2-39
6	CAN, PACKING	76-1-355
7	BOX, PACKING	76-16-247
8	PACKING AND MARKING OF BOX	20-4-255



FUZE, FLARE, MECHANICAL TIME, M1I1A1. ASSEMBLY

JUNE 16, 1941 | CLASS 73 | DIVISION 8 | DRAWING 53 | FILE

REVISIONS

1	8-15-41	7	3-15-43
2	10-1-41	8	1-30-44
3	11-1-41		
4	4-1-42		
5	5-5-42		
6	10-10-42		

TOLERANCE ON DIMENSIONS NOT OTHERWISE SPECIFIED
DECIMAL ±
FRACTIONAL ±
ANGULAR ±

DRAFTSMAN A.E.R. | TRACER SAG. | ENGINEER
CHECKED | ENGINEER M.T.

DRG. PERTAINS TO

SUBMITTED:- COL., ORD. DEPT. U.S.A.

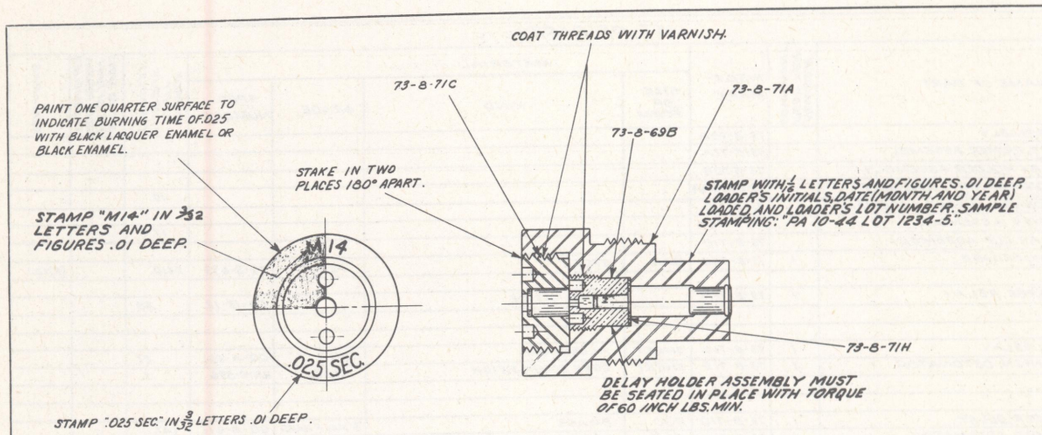
EXAMINED:- LT. COL., ORD. DEPT. U.S.A.

APPROVED BY ORDER OF THE CHIEF OF ORDNANCE:- LT. COL., ORD. DEPT. U.S.A.

D

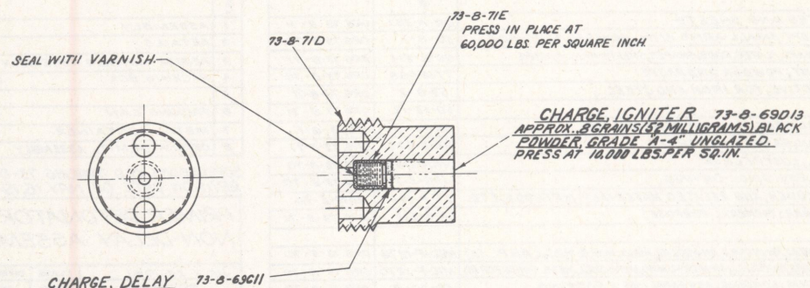
ORDNANCE DEPT., U.S.A.

OBSOLESCENT



PRIMER DETONATOR ASSEMBLY 73-8-69A13

(e) PROTECTIVE FINISH: TYPE I, CLASS TS, RS OR RSC, SPEC 57-0-2.
(f) ALTERNATIVE MATERIALS ARE INTENDED TO BE USED ONLY WHEN PRESCRIBED MATERIALS ARE NOT AVAILABLE.
(g) VARNISH, PHENOL-FORMALDEHYDE COMPOSITION:-
UNPIGMENTED VARNISH, GRADE II, ____ 84±2%, SPEC AXS-1680.
ALUMINUM STANDARD LINING POWDER, TYPE I, CLASS B, ____ 16±2%, SPEC TT-A-468.



DELAY HOLDER ASSEMBLY 73-8-69B13

10-28-41
10-28-41
10-28-41
10-28-41
10-28-41

LIST OF PARTS

LINE NO.	NAME OF PART	NUMBER REQUIRED PER COMPONENT	PIECE-MARK	MATERIAL: SIZE OR FORM	MATERIAL: KIND	MATERIAL: GRADE	MATERIAL: SPEC. NUMBER	APPROX. UNIT WEIGHT (GRAINS)	APPROX GROSS WT. OF RAW STOCK PER 100 ASSEMBLIES	REMARKS
1	ASSEMBLY		73-8-69A							
2	BODY, PRIMER, ASSEMBLY		73-8-71A							
3	DELAY HOLDER ASSEMBLY		73-8-69B							
4	DETONATOR, M17, ASSEMBLY	1	73-2-184AA					10.		
5	DETONATOR HOLDER ASSEMBLY		73-8-71C							
6	PRIMER ASSEMBLY	1	74-2-26A					17.4		
7	RELAY CUP ASSEMBLY		73-8-71E							
8	BODY, PRIMER	1	73-8-71B	BAR	STEEL	FS1117	QQ-S-633	2910.		(e) (b)
9	CHARGE, DELAY	1	73-8-69C		BLACK POWDER	"A-5"	JAN-P-223	.27		
10	CHARGE, RELAY	1	73-8-71F		LEAD AZIDE		50-13-12	.89		
11	CHARGE, IGNITER	1	73-8-69D		BLACK POWDER	"A-4" UNGLAZED	JAN-P-223	.8		
12										
13	CUP, RELAY	1	73-8-71G	SHEET	ALUMINUM	COND "A"	QQ-A-561	.27		
14	CUSHION, DETONATOR	1	73-8-71S	SHEET	CORK COMPOSITION	CLASS 3	HH-C-576	.1		
15										
16	HOLDER, DELAY	1	73-8-71D	ROD	BRASS	"B" HALF HARD	QQ-B-611	147.		
17	HOLDER, DETONATOR	1	73-8-71K	BAR	STEEL	FS1117	QQ-S-633	406.		(e)(b)
18										
19	WASHER, SEALING	1	73-8-71H	SHEET	ALUMINUM	COND "A"	QQ-A-561	.8		
20										
21										
22					LACQUER ENAMEL, YELLOW	I	JAN-L-73			
23					LACQUER ENAMEL, BLACK	I	JAN-L-73			(d)
24					VARNISH, PHENOL-FORMALDEHYDE COMP					(g)
25										
26										

(b) ALTERNATIVE MATERIAL:- STEEL, FS1015 TO FS1035 OR FS1137, COLD DRAWN, SPEC QQ-S-633(f).
(d) ALTERNATIVE MATERIAL:- ENAMEL, BLACK, GRADE I, SPEC. JAN-E-74 (f).

(a)- NOT REQUIRED WHEN PRIMER DETONATORS M14, ARE PROCURED AS PARTS OF COMPLETE FUZES.

LIST OF SPECIFICATIONS

LINE NO.		SPEC. NUMBER *	REQUIRED BY
1	ALUMINUM PLATES AND SHEETS	QQ-A-561	DRG. 73-8-71
2	AMMUNITION, EXCEPT SMALL ARMS AMM., GENERAL SPEC. FOR	50-0-1	DRG. 73-8-69
3	BRASS, COMMERCIAL, BARS, PLATES, RODS, SHAPES, SHEETS AND STRIPS	QQ-B-611	DRG. 73-8-71
4	ALUMINUM-PIGMENT; POWDER AND PASTE	TT-A-468	DRG. 73-8-69
5	FINISHES, PROTECTIVE, FOR IRON AND STEEL	57-0-2	DRG 73-8-71
6	LEAD AZIDE	50-13-12	DRG. 73-8-71
7	METALS, GENERAL SPEC FOR INSPECTION OF	QQ-M-151	QQ-B-611
8	POWDER. BLACK	JAN-P-223	DRG. 73-8-69
9	LACQUER ENAMEL, LUSTRELESS	JAN-L-73	DRG. 73-8-69
10	PAINT, VARNISH, LACQUER, AND RELATED MATERIALS; METHODS, ETC	TT-P-141	JAN-E-74
11	ENAMEL, LUSTRELESS, QUICK-DRYING	JAN-E-74	DRG. 73-8-69
12	STEEL, CARBON; BARS (GENERAL PURPOSE)	QQ-S-633	DRG. 73-8-71
13	CORK-COMPOSITION; GASKET AND SHEET	HH-C-576	DRG 73-8-71
14	PRIMER DETONATOR M14, LOADING, ASSEMBLING AND PACKING	50-20-3	DRG. 73-8-69
15	PRIMER DETONATORS, M14 & M16A1, METAL PARTS FOR	50-79-3	DRG. 73-8-69
16	FUZES BOMB, TAIL, AN-M100A2, AN-M101A2, AN-M102A2, M160, M161 & M162, L A & P (c)	MIL-F-1276	DRG. 73-8-69
17	FUZES, BOMB, TAIL, AN-M100A2, AN-M101A2, AN-M102A2, M160, M161 & M162,		
18	METAL PARTS FOR (c)	MIL-F-1270	DRG 73-8-69
19	VARNISH, PHENOL FORMALDEHYDE AND ALUMINUM, AIR DRYING	AXS-1680	DRG 73-8-69
20	STANDARD FOR DIMENSIONING AND TOLERANCING	30-1-7	DRG 73-8-71

* THE SPECIFICATION NUMBERS SHOWN ARE BASIC NUMBERS ONLY. WHEN A SPECIFICATION IS REVISED A LETTER IS AFFIXED TO ITS BASIC NUMBER. SPECIFICATIONS REFERRED TO IN THESE SPECIFICATIONS AND NOT LISTED HEREON, SHALL NOT APPLY.

(c) THESE SPECIFICATIONS ARE REQUIRED ONLY WHEN PRIMER DETONATORS M14 ARE PROCURED AS PARTS OF COMPLETE FUZES.

SCALE: 2/1, 4/1.

LIST OF DRAWINGS

LINE NO.		DRAWING NO.
1	ASSEMBLY	73-8-69
2	DETAILS	73-8-71
3	PRIMER, NEW No 4 ASSEMBLY	74-2-26
4	PACKING BOX (a.)	76-7-64-9
5		
6	PACKING CAN (a.)	76-7-64-8
7	METAL CONTAINER	76-7-661
8	DETONATOR, M17, ASSEMBLY	73-2-184

PRIMER DETONATOR M14, .025 SECOND DELAY. ASSEMBLY.

JULY 28, 1941.

REVISIONS			
13	7-26-50		

CLASS	DIVISION	DRAWING	FILE
73	8	69	

TOLERANCE ON DIMENSIONS NOT OTHERWISE SPECIFIED
DECIMAL ±
FRACTIONAL ±
ANGULAR ±

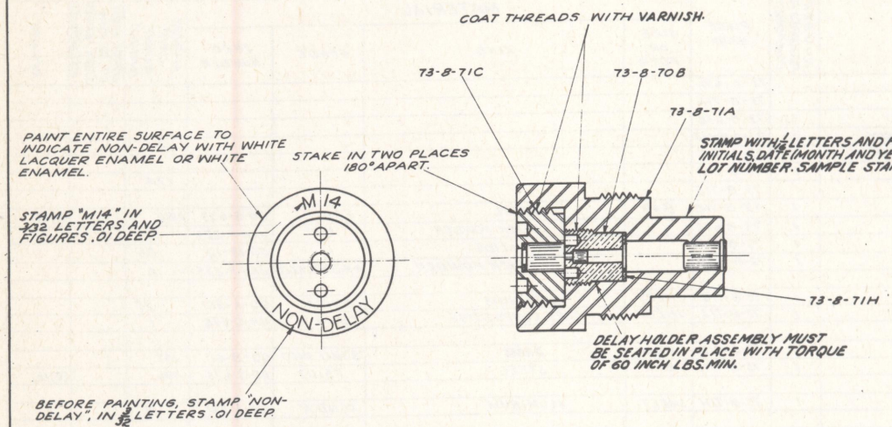
DRAFTSMAN	TRACER	ENGINEER
S.S.D.	S.S.D.	
CHECKER	O.C.	ASST CHIEF DRAFTSMAN

DRG. PERTAINS TO
73-8-3
73-8-7
73-8-8
73-8-903
73-8-905

SUBMITTED:- R. D. Butler Jr. MAJ., ORD. DEPT., U.S.A.
EXAMINED:- Wilson Teague LT. COL., ORD. DEPT., U.S.A.
APPROVED BY ORDER OF THE CHIEF OF ORDNANCE:- BRIG. GEN., ORD. DEPT., U.S.A.

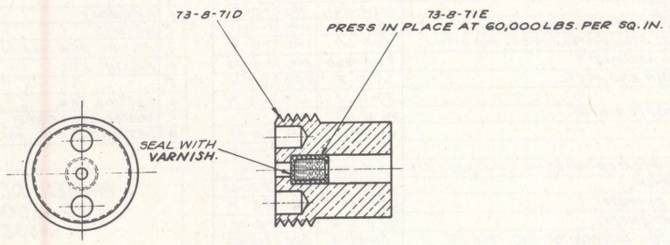
D

ORDNANCE DEPT., U.S.A.



PRIMER DETONATOR ASSEMBLY 73-8-70 A12

(f) PROTECTIVE FINISH: TYPE I, CLASS TS, RS OR RSC, SPEC 57-0-2.
(g) ALTERNATE MATERIALS ARE INTENDED TO BE USED ONLY WHEN PRESCRIBED MATERIALS ARE NOT AVAILABLE.
(h) VARNISH, PHENOL-FORMALDEHYDE COMPOSITION:-
UNPIGMENTED VARNISH, GRADE II, _____ 84±2%, SPEC AXS-1680.
ALUMINUM STANDARD LINING POWDER, TYPE I, CLASS B, ___ 16±2%, SPEC TT-A-468.



DELAY HOLDER ASSEMBLY 73-8-70 B12

APPROVED STANDARD

	Set.
	10-28-41
	10-28-41
	10-28-41
	10-28-41
	10-28-41

LIST OF PARTS

LINE NO.	NAME OF PART	NUMBER REQ'D PER COMPONENT	PIECE-MARK	MATERIAL: SIZE OR FORM	MATERIAL: KIND	MATERIAL: GRADE	MATERIAL: SPEC. NUMBER	APPROX. UNIT WEIGHT (GRAINS)	APPROX GROSS WT. OF ALL PARTS IN ASSEMBLIES	REMARKS
1	ASSEMBLY		73-8-70A							
2	BODY, PRIMER ASSEMBLY		73-8-71A							
3	DELAY HOLDER ASSEMBLY		73-8-70B							
4	DETONATOR, M17, ASSEMBLY	1	73-2-184AA					10.		
5	DETONATOR HOLDER ASSEMBLY		73-8-71C							
6	PRIMER ASSEMBLY	1	74-2-26A					17.4		
7	RELAY CUP ASSEMBLY		73-8-71E							
8	BODY, PRIMER	1	73-8-71B	BAR	STEEL	FS1117	QQ-S-633	2310.		(f)(g)
9										
10	CHARGE, RELAY	1	73-8-71F		LEAD AZIDE		50-13-12	.88		
11										
12										
13	CUP, RELAY	1	73-8-71G	SHEET	ALUMINUM	COND "A"	QQ-A-561	.27		
14	CUSHION, DETONATOR	1	73-8-71S	SHEET	CORK COMPOSITION	CLASS 3	HH-C-576	.1		
15										
16										
17	HOLDER, DELAY	1	73-8-71D	ROD	BRASS	"B" HALF HARD	QQ-B-611	147.		
18	HOLDER, DETONATOR	1	73-8-71K	BAR	STEEL	FS1117	QQ-S-633	406.		(f)(g)
19										
20	WASHER, SEALING	1	73-8-71H	SHEET	ALUMINUM	COND "A"	QQ-A-561	.8		
21										
22					LACQUER ENAMEL, YELLOW	I	JAN-L-73			
23					LACQUER ENAMEL, WHITE	I	JAN-L-73			(d)
24					VARNISH, PHENOL-FORMALDEHYDE COMP					(h)
25										

(a)-ALTERNATIVE MATERIAL:-STEEL, FS1015 TO 1035 OR FS1137, COLD DRAWN, SPEC QQ-S-633 (g).

(d)-ALTERNATIVE MATERIAL:-ENAMEL, WHITE, GRADE I, SPEC. JAN-E-74 (g).

(c) NOT REQUIRED WHEN PRIMER DETONATORS, M14, ARE PROCURED AS PARTS OF COMPLETE FUZES.

LIST OF SPECIFICATIONS

LINE NO.		SPEC. NUMBER *	REQUIRED BY
1	ALUMINUM, PLATES AND SHEETS	QQ-A-561	DRG. 73-8-71
2	AMMUNITION, EXCEPT SMALL ARMS AMM., GENERAL SPEC. FOR	50-0-1	DRG. 73-8-70
3	BRASS, COMMERCIAL, BARS, PLATES, RODS, SHAPES, SHEETS AND STRIPS	QQ-B-611	DRG. 73-8-71
4	ALUMINUM-PIGMENT; POWDER AND PASTE	TT-A-468	DRG. 73-8-70
5	FINISHES, PROTECTIVE, FOR IRON AND STEEL	57-0-2	DRG. 73-8-71
6	LEAD AZIDE	50-13-12	DRG. 73-8-71
7	METALS, GENERAL SPEC. FOR INSPECTION OF	QQ-M-151	QQ-B-611
8	CORK-COMPOSITION; GASKET AND SHEET	HH-C-576	DRG. 73-8-71
9	LACQUER ENAMEL, LUSTRELESS	JAN-L-73	DRG. 73-8-70
10	ENAMEL, LUSTRELESS, QUICK-DRYING	JAN-E-74	DRG. 73-8-70
11	PAINT, VARNISH, LACQUER, AND RELATED MATERIALS; METHODS, ETC.	TT-P-141	JAN-E-74
12	STEEL, CARBON; BARS (GENERAL PURPOSE)	QQ-S-633	DRG. 73-8-71
13			
14	FUZES, BOMB, TAIL, AN-M100A2, AN-M101A2, AN-M102A2, M160, M161 & M162, L A & P (e)	MIL-F-1276	DRG. 73-8-70
15	FUZE, BOMB, TAIL, AN-M100A2, AN-M101A2, AN-M102A2, M160, M161 & M162, METAL PARTS FOR (e)	MIL-F-1270	DRG. 73-8-70
16	PRIMER DETONATOR M14, LOADING, ASSEMBLING & PACKING	50-20-3	DRG. 73-8-70
17	PRIMER DETONATORS, M14 & M18A1, METAL PARTS FOR	50-79-3	DRG. 73-8-70
18			
19	VARNISH, PHENOL FORMALDEHYDE AND ALUMINUM, AIR DRYING	AXS-1680	DRG. 73-8-70
20	STANDARD FOR DIMENSIONING AND TOLERANCING	30-1-7	DRG 73-8-71

* THE SPECIFICATION NUMBERS SHOWN ARE BASIC NUMBERS ONLY. WHEN A SPECIFICATION IS REVISED A LETTER IS AFFIXED TO ITS BASIC NUMBER. SPECIFICATIONS REFERRED TO IN THESE SPECIFICATIONS AND NOT LISTED HEREON, SHALL NOT APPLY.

(e)-THESE SPECIFICATIONS ARE REQUIRED ONLY WHEN PRIMER DETONATORS M14 ARE PROCURED AS PARTS OF COMPLETE FUZES.

LIST OF DRAWINGS

LINE NO.		DRAWING NUMBER
1	ASSEMBLY	73-8-70
2	DETAILS	73-8-71
3	PRIMER NEW NO. 4 ASSEMBLY	74-2-26
4	PACKING BOX (c)	76-7-649
5		
6	PACKING CAN (c)	76-7-648
7	METAL CONTAINER (c)	76-7-661
8	DETONATOR, M17, ASSEMBLY	73-2-184

SUPERSEDES OLD TRACING 73-8-70 UNDER REVISION DATE OF MAY 16, 1944

PRIMER DETONATOR M14 NON-DELAY ASSEMBLY

JULY 28, 1941

REVISIONS	
8	6-19-43
9	5-16-44
10	12-16-44
11	8-15-45
12	7-26-50

CLASS	DIVISION	DRAWING	FILE
73	8	70	

TOLERANCE ON DIMENSIONS NOT OTHERWISE SPECIFIED
DECIMAL ±
FRACTIONAL ±
ANGULAR ±

D'FTSMAN	TRACER	ENGINEER
Jean Mudd	Jean Mudd	
CHECKER		PRINCIPAL ENGINEER
NWF		

SUBMITTED: Amgallagher, LT. COL., ORD. DEPT. U.S.A.

EXAMINED: H.L. Beckman, ORD. DEPT. U.S.A.

APPROVED BY ORDER OF THE CHIEF OF ORDNANCE: C.S. Reed by a.g., COL., ORD. DEPT. U.S.A.

DRG. PERTAINS TO
73-8-72
73-8-181
73-8-183

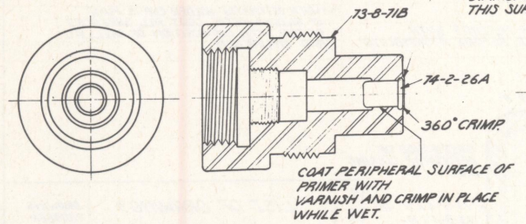
D

ORDNANCE DEPT., U.S.A.

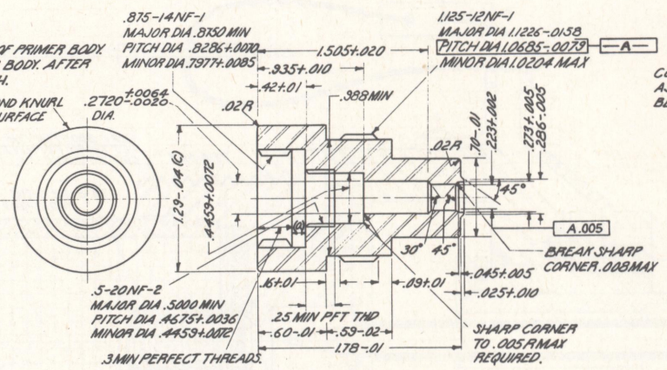
SCALE: 2/1, 4/1

HEAT TREATMENT AND FINAL FINISH

CRIMPED LIP SHALL NOT PROJECT MORE THAN .01 MAX BEYOND THE FACE OF PRIMER BODY. TOP OF PRIMER CUP SHALL BE .011 MIN TO .028 MAX BELOW FACE OF PRIMER BODY. AFTER GAGING, LIGHTLY COAT TOP OF PRIMER AND CRIMPED LIP WITH VARNISH.



BODY, PRIMER, ASSEMBLY 73-8-71A14

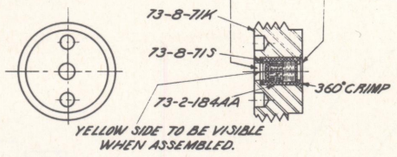


BODY, PRIMER 73-8-71B14
STEEL, FS1117
FINISH 125

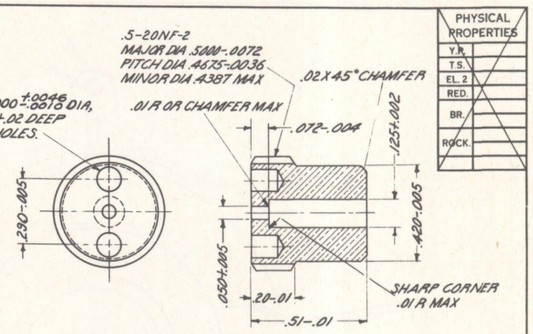
(c)-THIS DIMENSION APPLIES AFTER KNURLING.
(a) IMPERFECT THREADS OR UNDERCUT PERMITTED, DIAMETER OF UNDERCUT NOT TO EXCEED MAJOR DIAMETER OF THREADS.

WHEN SECURING DETONATOR, CORK CUSHION MUST BE COMPRESSED AND DETONATOR TO BE FLUSH OR BELOW FACE OF DETONATOR HOLDER.

COAT SIDES AND YELLOW END OF DETONATOR ASSEMBLY WITH YELLOW LACQUER ENAMEL BEFORE CRIMPING IN PLACE

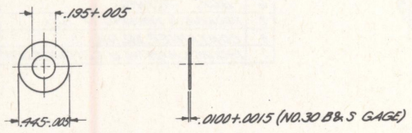


DETONATOR HOLDER ASSEMBLY 73-8-71C13

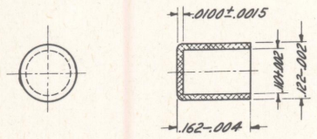


(b) HOLDER, DELAY 73-8-71 D13
COMMERCIAL BRASS, ROD, COMPOSITION B, HALF HARD
FINISH 125

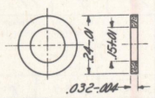
(b) THE CENTER OF ANY ONE SPANNER HOLE CAN DEVIATE .010 MAX FROM THE CENTER LINE THROUGH THE FLASH HOLE AND THE OTHER SPANNER HOLE, PROVIDED THE .230-.005 DIMENSION IS HELD.



WASHER, SEALING 73-8-71H12
ALUMINUM, TYPE 2, CLASS A

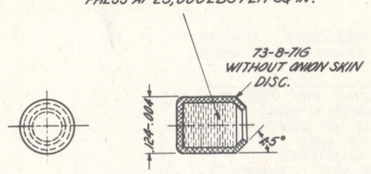


CUP, RELAY 73-8-71G10
ALUMINUM, TYPE 2, CLASS A

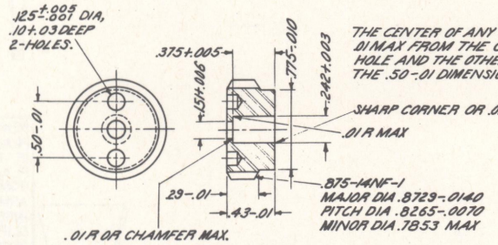


CUSHION, DETONATOR 73-8-71S14
CORK COMPOSITION, CLASS 3.
DIAMETER DIMENSIONS CONTROL TOOL MANUFACTURE.

CHARGE, RELAY 73-8-71F10
.38-.06 GRAINS (64-4 MILLIGRAMS) LEAD AZIDE
PRESS AT 25,000 LBS PER SQ IN.



RELAY CUP ASSEMBLY 73-8-71E7



THE CENTER OF ANY SPANNER HOLE CAN DEVIATE .01 MAX FROM THE CENTER LINE THROUGH THE FLASH HOLE AND THE OTHER SPANNER HOLE, PROVIDED THE .50-.01 DIMENSION IS HELD.

HOLDER, DETONATOR 73-8-71K14
STEEL, FS 1117, COLD DRAWN
FINISH 125

SEE DWG 73-8-69 FOR PROTECTIVE FINISHES AND ALTERNATIVE MATERIAL.

REMOVE ALL BURRS.

SCALE, INCHES, 2, 4, 8

SUPERSEDES 73-8-71 WITHOUT CHANGE DEC 30, 1948

PHYSICAL PROPERTIES

	Y.R.	T.S.	EL. 2	RED.	BR.	ROCK.

NOTICE:- THIS DRAWING SHALL NOT BE USED NOR REPRODUCED EITHER WHOLLY OR IN PART EXCEPT WHEN AUTHORIZED IN CONNECTION WITH UNITED STATES GOVERNMENT PROCUREMENT.

PRIMER DETONATOR, M14. DETAILS.

JULY 28, 1941

CLASS	DIVISION	DRAWING	FILE
73	8	71	

REVISIONS

12	8-15-45
13	12-30-48
14	7-26-50

DRG. PERTAINS TO

73-8-67
73-8-68
73-8-69
73-8-70
73-8-83
73-8-84
73-8-156
73-8-354

TOLERANCE ON DIMENSIONS NOT OTHERWISE SPECIFIED
DECIMAL ±
FRACTIONAL ±
ANGULAR ±

DFTSMAN	TRACER	ENGINEER
N.W.F.	J.M.G.	

CHECKER	ENGINEER
A.C.J.	

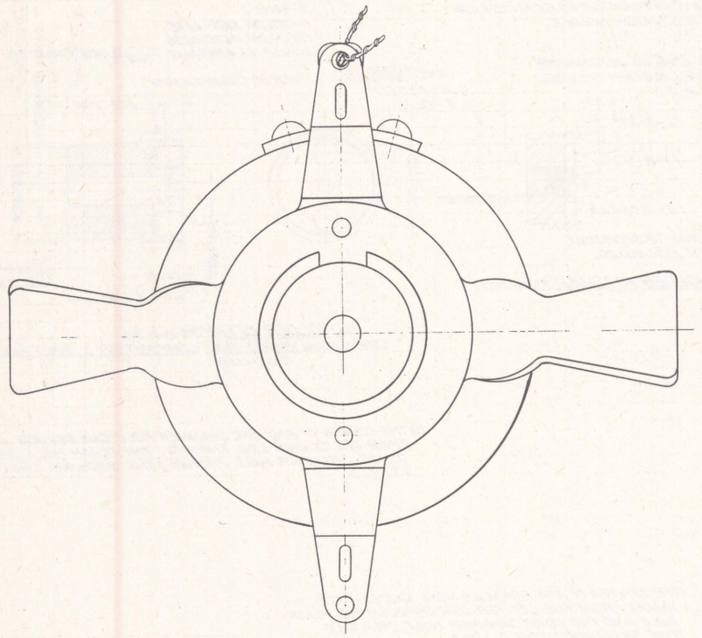
SUBMITTED:-
ORD. ENG., ORD. DEPT., U. S. A.

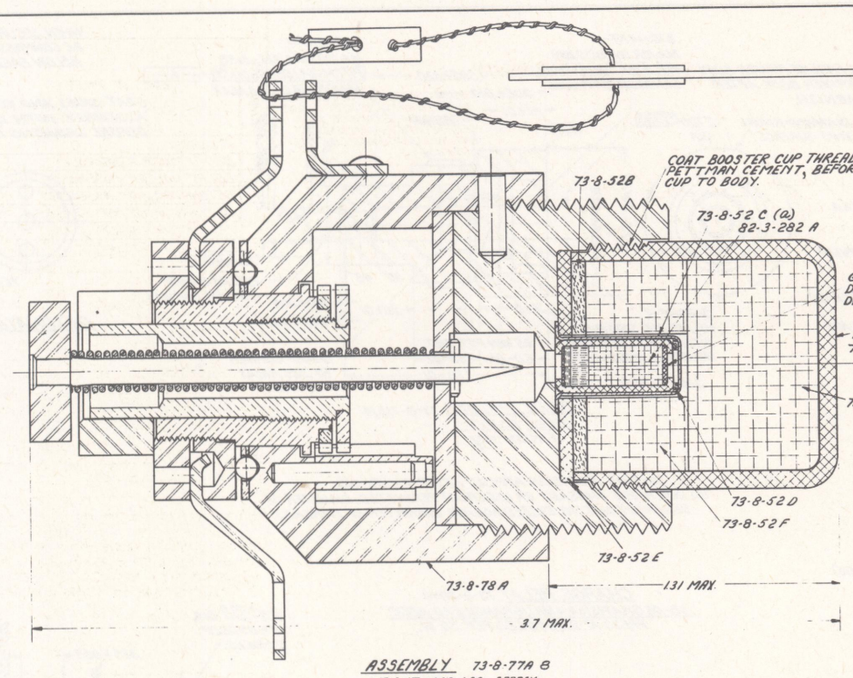
EXAMINED:-
COL., ORD. DEPT., U. S. A.

APPROVED BY ORDER OF THE CHIEF OF ORDNANCE:-
COL., ORD. DEPT., U. S. A.

D

ORDNANCE DEPT., U. S. A.

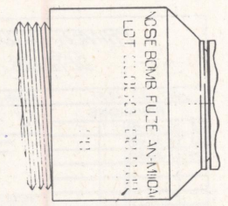




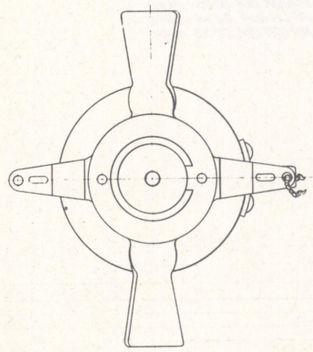
(a) WHEN DETONATOR HOLDER CUP IS MADE OF GILDING METAL, COAT ALL SURFACES OF CUP WITH COMPOSITION OF SHELLAC AND ANILINE DYE.

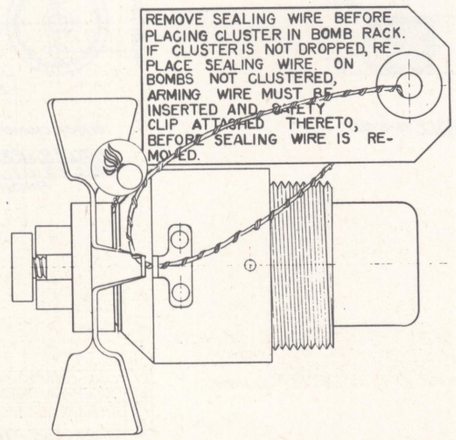
LINE NO	LIST OF DRAWINGS	DRAWING NUMBER
1	ASSEMBLY	73-8-77
2	LIST OF PARTS AND LIST OF SPECS.	73-8-77A
3	METAL PARTS ASSEMBLY	73-8-78
4	DETAILS	73-8-52
5	DETONATOR, M13 ASSEMBLY	82-3-282
6	BOX, PACKING	76-16-376
7	PACKING & MARKING OF BOX	20-4-417
8	CONTAINER, METAL	76-1-598
9	PACKING & MARKING OF CONTAINER, METAL	76-1-597

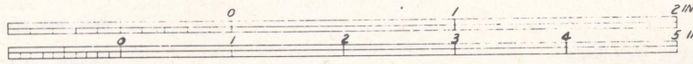
ASSEMBLY 73-8-77A B
WEIGHT - 1.02 LBS. APPROX.



STAMP WITH 3/32 LETTERS AND FIGURES.
LOADER'S LOT NUMBER, LOADER'S INITIALS AND DATE (MONTH AND YEAR) LOADED.
SAMPLE STAMPING - LOT 1234-5 PA 3-42







FUZE, BOMB, NOSE, AN-M10A1. ASSEMBLY.

REVISIONS			
1	10-31-42	7	9-2-44
2	3-31-43	8	2-15-45
3	9-10-43		
4	12-31-43		
5	4-27-44		
6	7-1-44		

DRG. PERTAINS TO

MAY 21, 1942	CLASS	DIVISION	DRAWING	FILE
	73	8	77	

TOLERANCE ON DIMENSIONS NOT OTHERWISE SPECIFIED
DECIMAL ±
FRACTIONAL ±
ANGULAR °

DESIGNED M.A.N. | TRACED G.R.B. | CHECKED W.M.G. | ENGINEER M.T.

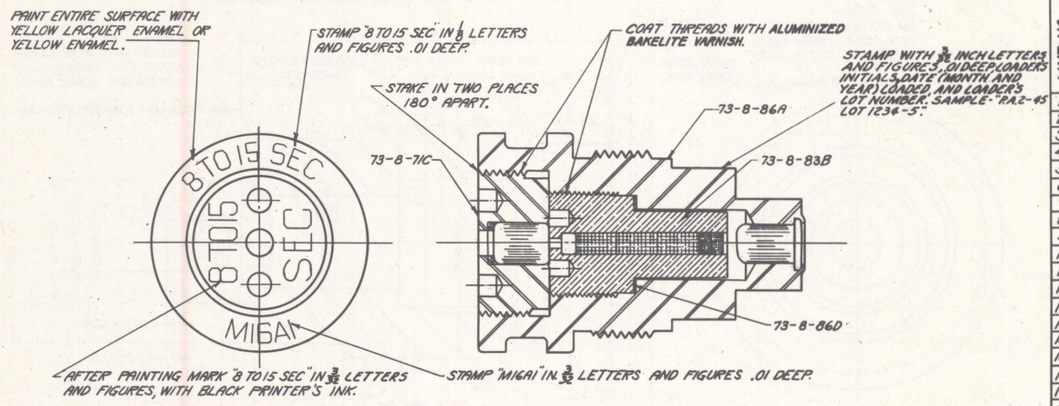
SUBMITTED: Milton Cleye, COLONEL ORD. DEPT. U.S.A.

EXAMINED: J.A. Tribby, COLONEL ORD. DEPT. U.S.A.

APPROVED BY ORDER OF THE CHIEF OF ORDNANCE: W.H. Rutherford, Colonel, Ord. Dept. for BRIG. GEN. CHIEF OF ORD.

D

ORDNANCE DEPT. U.S.A.

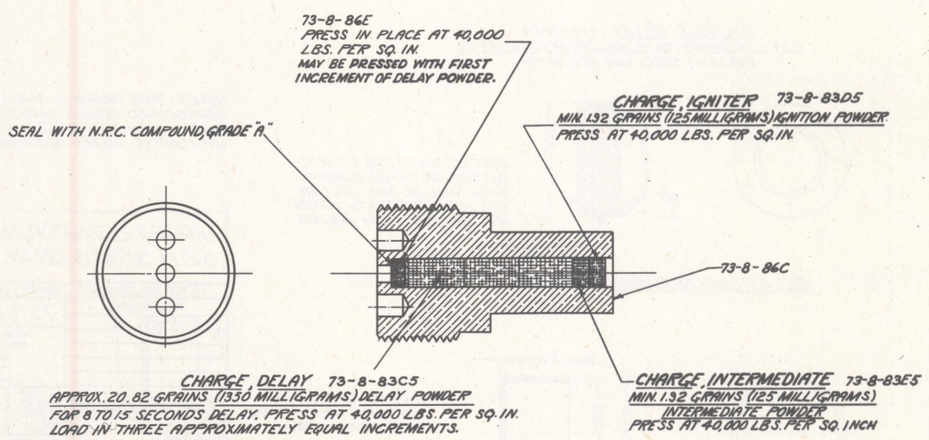


PRIMER DETONATOR ASSEMBLY 73-8-83A7

LIST OF PARTS

LINE NO.	NAME OF PART	NUMBER REQ'D PER COMPONENT	PIECE MARK	MATERIAL: SIZE OR FORM	MATERIAL: KIND	MATERIAL: GRADE	MATERIAL: SPEC. NUMBER	APPROXIMATE UNIT WEIGHT (GRAINS)	APPROX. GROSS WT. OF RAW STOCK PER 1000 ASSEMBLIES	REMARKS
1	ASSEMBLY		73-8-83A					2760.		
2	BODY, PRIMER, ASSEMBLY		73-8-86A							
3	DELAY HOLDER ASSEMBLY		73-8-83B							
4	DETONATOR, M17C, ASSEMBLY	1	73-2-184AA					10.		
5	DETONATOR HOLDER ASSEMBLY		73-8-71C							
6	PRIMER ASSEMBLY	1	74-2-26A					17.4		
7	RELAY CUP ASSEMBLY		73-8-86E							
8	BODY, PRIMER	1	73-8-86B	BAR	STEEL	WD X1314	57-107	2015.		(f)
9	CHARGE, DELAY	1	73-8-83C		DELAY POWDER	TYPE I, CLASS B	PXS-1039	20.82		
10	CHARGE, IGNITER	1	73-8-83D		IGNITION POWDER	TYPE II	PXS-1039	2.88		
11	CHARGE, RELAY	1	73-8-86F		LEAD AZIDE		50-13-12	1.39		
12	CUP, RELAY	1	73-8-86G	SHEET	ALUMINUM	CLASS "A"	QQ-A-561	.54		
13	CUSHION, DETONATOR	1	73-8-71S	SHEET	CORK	CLASS 3 OR 4	HH-C-576	.01		(k)
14	HOLDER, DELAY	1	73-8-86C	ROD	BRASS	"B" HALF HARD	QQ-B-611	300.		
15	HOLDER, DETONATOR	1	73-8-71K	BAR	STEEL	WD X1314	57-107	385.		(f)
16	WASHER, SEALING	1	73-8-86D	SHEET	ALUMINUM	CLASS "A"	QQ-A-561	.80		
17	CHARGE, INTERMEDIATE	1	73-8-83E		INTERMEDIATE POWDER	TYPE III, CLASS B	PXS-1039	2.88		
18					ALUMINIZED BAKELITE VARNISH		PXS-1143			
19					COMPOUND, N.R.C.	"A"	50-11-10			
20					INK, PRINTER'S BLACK		COMMERCIAL			
21					LACQUER, ENAMEL, YELLOW	I	3-162			(C)
22					SHELLAC AND ANILINE DYE COMPOSITION		PXS-1183			

(c)- ALTERNATIVE MATERIAL; YELLOW ENAMEL, GRADE I, SPEC. 3-67.
(e)- NOT REQUIRED WHEN PRIMER DETONATORS, MIGAI ARE PROCURED AS PARTS OF COMPLETE FUZES.
(f)- ALTERNATIVE MATERIAL :- STEEL, WD X1315, WD X1335, WD 1015 TO WD 1035, OR WD 1115, COLD DRAWN.
(k)- SPECIFICATION HH-C-576 EXCEPT FOR THICKNESS.



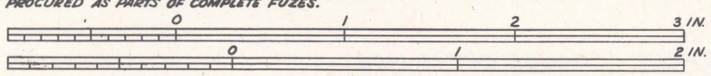
DELAY HOLDER ASSEMBLY 73-8-83B6

NOTICE: THIS DRAWING SHALL NOT BE USED NOR REPRODUCED EITHER WHOLLY OR IN PART EXCEPT WHEN AUTHORIZED IN CONNECTION WITH UNITED STATES GOVERNMENT PROCUREMENT.

LIST OF SPECIFICATIONS

LINE NO.	LIST OF SPECIFICATIONS	SPEC. NUMBER *	REQUIRED BY
1	ALUMINUM; PLATES AND SHEETS	QQ-A-561	DRG. 73-8-71
2	AMMUNITION, EXCEPT SMALL ARMS AMM., GENERAL SPEC. FOR	50-0-1	DRG. 73-8-83
3	BRASS, COMMERICAL; BARS, PLATES, RODS, SHAPES, SHEETS, AND STRIPS	QQ-B-611	DRG. 73-8-86
4	BARIUM CHROMATE	PXS-1095	PXS-1039
5	COMPOUND, N.R.C.	50-11-10	DRG. 73-8-83
6	GLYCERIN (GLYCEROL)	O-G-491	PXS-1039
7	LEAD AZIDE	50-13-12	DRG. 73-8-71
8	METALS, GENERAL SPEC. FOR INSPECTION OF	QQ-M-151	QQ-A-561
9	OIL, LINSEED BOILED	JJ-O-331	PXS-1039
10	ENAMEL, LUSTRELESS, QUICK DRYING	3-67	DRG. 73-8-83
11	PAINTS AND RELATED MATERIALS, GENERAL SPEC. FOR	3-1	3-67
12	STEEL, CARBON AND ALLOY BARS	57-107	DRG. 73-8-86
13	LACQUER ENAMEL, LUSTRELESS	3-162	DRG. 73-8-83
14	POWDER, NON-GASEOUS	PXS-1039	DRG. 73-8-83
15	FUZES, BOMB, TAIL, M112A1, M113A1 AND M114A1, LOADING, ASSEMBLY, ETC. (d)	AXS-819	DRG. 73-8-83
16	FUZES, BOMB, TAIL, M112A1, M113A1 AND M114A1, METAL PARTS FOR (d)	AXS-820	DRG. 73-8-83
17	MANGANESE	PXS-1096	PXS-1039
18	PRIMER DETONATOR, M16A1 LOADING, ASSEMBLING, AND PACKING	AXS-826	DRG. 73-8-83
19	PRIMER DETONATOR, M14 AND M16A1, METAL PARTS FOR	AXS-626	DRG. 73-8-83
20	SULPHUR	50-11-40	PXS-1039
21	CORK-COMP. GASKET & SHEET	HH-C-576	DRG. 73-8-71
22	SILICON, REFINED	57-25	PXS-1039
23	SHELLAC AND ANILINE DYE COMPOSITION	PXS-1183	DRG. 73-8-86
24			
25	VARNISH, PHENOL-FORMALDEHYDE, ALUMINUM CONTAINING	PXS-1143	DRG. 73-8-86

* THE SPECIFICATION NUMBERS SHOWN ARE BASIC NUMBERS ONLY. WHEN A SPECIFICATION IS REVISED A LETTER IS AFFIXED TO ITS BASIC NUMBER. SPECIFICATIONS REFERRED TO IN THESE SPECIFICATIONS AND NOT LISTED HEREON, SHALL NOT APPLY.
(d) THESE SPECIFICATIONS ARE REQUIRED ONLY WHEN PRIMER DETONATORS, M16A1 ARE PROCURED AS PARTS OF COMPLETE FUZES.



LIST OF DRAWINGS

LINE NO.	LIST OF DRAWINGS	DRAWING NUMBER
1	ASSEMBLY	73-8-83
2	DETAILS	73-8-86
3	DETAILS	73-8-71
4	DETONATOR, M17C ASSEMBLY	73-2-184
5	PRIMER, NEW NO. 4 ASSEMBLY	74-2-26
6	PACKING & MARKING OF BOX (e)	20-4-272
7	PACKING CAN (e)	76-7-648
8	PACKING BOX (e)	76-7-649
9	METAL CONTAINER (e)	76-7-661

PRIMER-DETONATOR, M16A1, 8 TO 15 SECONDS DELAY. ASSEMBLY.

JUNE 29, 1942.

CLASS	DIVISION	DRAWING	FILE
73	8	83	

REVISIONS

1	7-27-42	7	8-15-45
2	10-21-42		
3	1-6-43		
4	5-20-43		
5	1-28-44		
6	3-21-45		

TOLERANCE ON DIMENSIONS NOT OTHERWISE SPECIFIED
DECIMAL ±
FRACTIONAL ±
ANGULAR ±

DRAFTSMAN	TRACER	ENGINEER
D.F.C.	R.M.C.	

CHECKER	CHECKER	CHIEF DRAFTSMAN
J.M.M.	G.G.	M.T.

DRG. PERTAINS TO
73-8-112
73-8-114
73-8-116
73-8-158
73-8-160
73-8-162

SUBMITTED:
Milton Cayce
COL., ORD. DEPT. U.S.A.

EXAMINED:
R. S. Rutledge Jr.
LT. COL., ORD. DEPT. U.S.A.

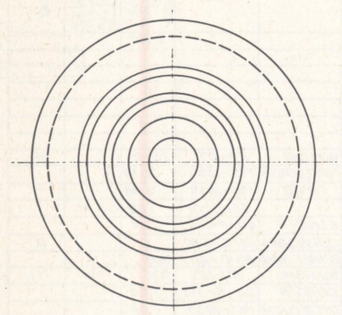
APPROVED BY ORDER OF THE CHIEF OF ORDNANCE:
S. R. Stribling by a.a.
COL., ORD. DEPT. U.S.A.

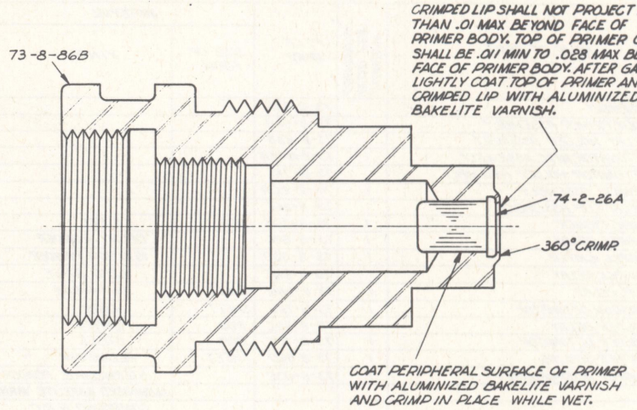
D

ORDNANCE DEPT., U.S.A.

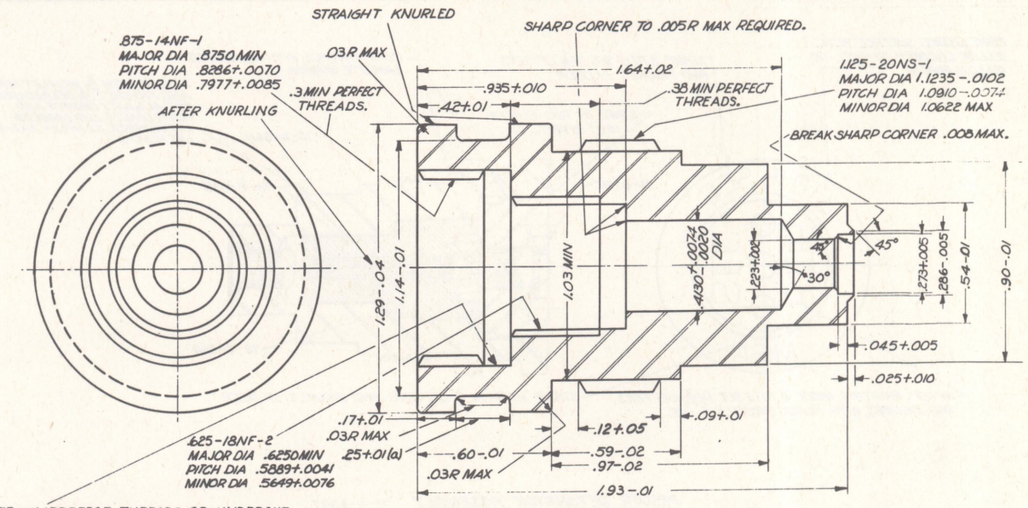
D-42699

HEAT TREATMENT AND FINAL FINISH





BODY, PRIMER, ASSEMBLY 73-8-86A7

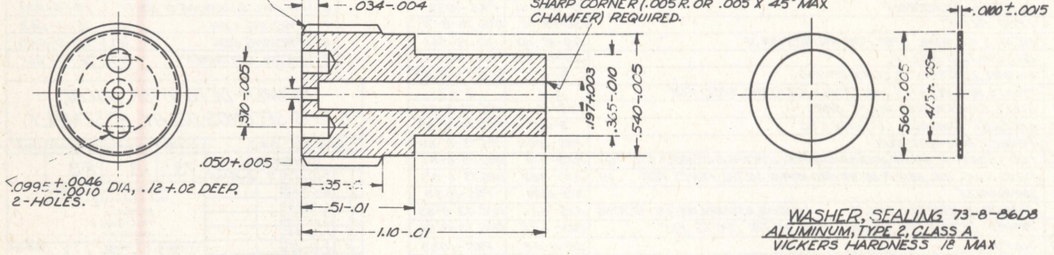


NOTE:- IMPERFECT THREADS OR UNDERCUT PERMITTED. DIA OF UNDERCUT NOT TO EXCEED MAJOR DIA OF THREAD.

(a) DIMENSIONS PERTAINING TO GROOVE NEED NOT BE GAGED. GROOVE FOR IDENTIFICATION ONLY.

BODY, PRIMER 73-8-86B8
STEEL, F.S X1314
FINISH 125

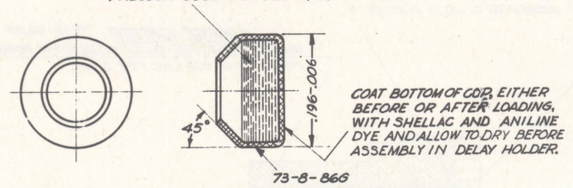
NOTE:- ECCENTRICITY BETWEEN .223+.002 DIA HOLE AND 1.125-2CNS-1 THREADS NOT TO EXCEED .0025.



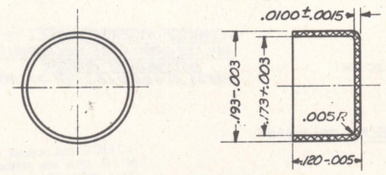
HOLDER, DELAY 73-8-86C8
COMMERCIAL BRASS, ROD, COMPOSITION B, HALF-HARD
FINISH 125

WASHER, SEALING 73-8-86D8
ALUMINUM, TYPE 2, CLASS A
VICKERS HARDNESS 12 MAX

CHARGE, RELAY 73-8-86F4
.139-.04 GRAINS (9.0-2. MILLIGRAMS) LEAD AZIDE
PRESS AT 5000 LBS PER SQ IN.



RELAY CUP ASSEMBLY 73-8-86E8



CUP, RELAY 73-8-86G4
ALUMINUM, TYPE 2, SOFT

SEE DWG 73-8-84 FOR PROTECTIVE FINISHES AND ALTERNATIVE MATERIAL.

NOTICE: THIS DRAWING SHALL NOT BE USED NOR REPRODUCED EITHER WHOLLY OR IN PART EXCEPT WHEN AUTHORIZED IN CONNECTION WITH UNITED STATES GOVERNMENT PROCUREMENT.

SUPERSEDES 73-8-86 WITHOUT CHANGE OCT 12, 1948.

REMOVE ALL BURRS.

SCALE, INCHES, 4/1, 10/1

PRIMER DETONATOR, M16A1, 4 TO 5 & 8 TO 15 SECONDS DELAY. DETAILS.

JUNE 29, 1942	CLASS	DIVISION	DRAWING	FILE
REVISIONS	73	8	86	

7 8-15-45
8 10-12-48

TOLERANCE ON DIMENSIONS NOT OTHERWISE SPECIFIED
DECIMAL ±
FRACTIONAL ±
ANGULAR ±

D'FTSMAN	TRACER	ENGINEER
G.R.B.	REG	
CHECKER		ENGINEER
A.C.J.		

DRG. PERTAINS TO
73-8-83
73-8-84

SUBMITTED:-
ORD. ENG, ORD. DEPT., U. S. A.

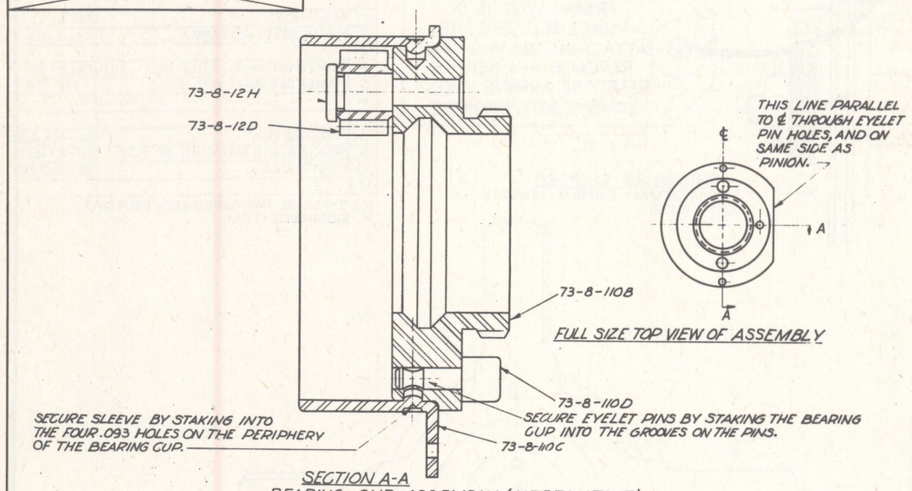
EXAMINED:-
COL. ORD. DEPT., U. S. A.

APPROVED BY ORDER OF THE CHIEF OF ORDNANCE:-
COL. ORD. DEPT., U. S. A.

D

ORDNANCE DEPT., U. S. A.

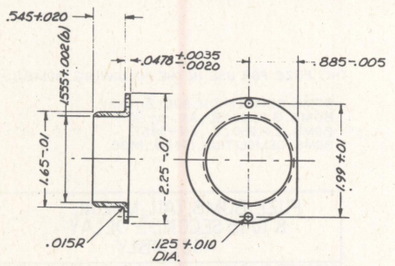
HEAT TREATMENT AND FINAL FINISH



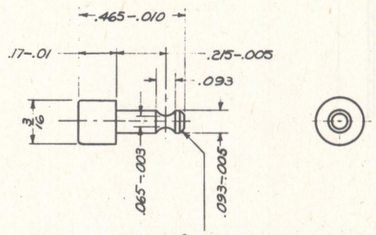
SECTION A-A
BEARING CUP ASSEMBLY (ALTERNATIVE) 73-8-110A

FULL SIZE TOP VIEW OF ASSEMBLY

(b)- THE 1.555 +.002 I D SHALL BE HELD FOR A DISTANCE OF NOT LESS THAN 1/8 INCH FROM THE FLANGED END. THE REMAINING LENGTH OF THE I D MAY BE UNDERSIZE DOWN TO 1.548 MIN.

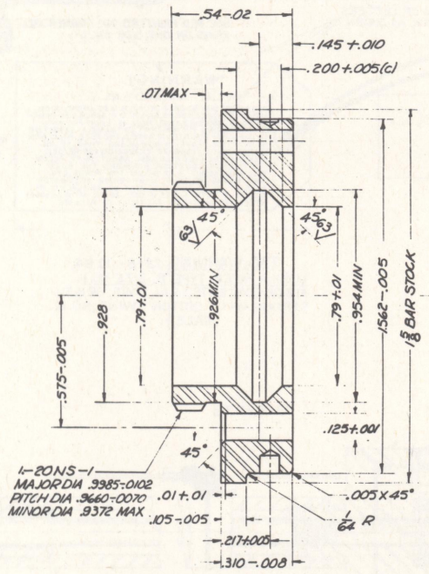


SLEEVE, BEARING CUP 73-8-110C8
STEEL, WD 1010 TO WD 1020, COLD-ROLLED, TEMPER NO 4, (SOFT SKIN ROLLED) FINISH NO 2 OR NO 3, REGULAR BRIGHT OR BEST BRIGHT

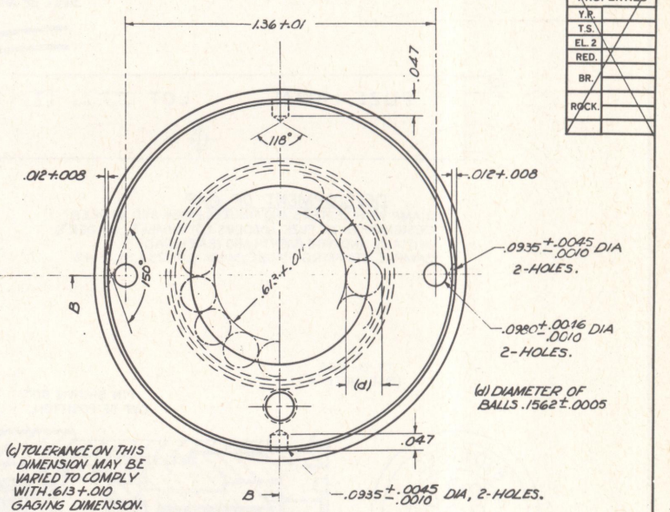


.005 X 45° CHAMFER.

PIN, EYELET (ALTERNATIVE) 73-8-110D8
STEEL, FS X1314, COLD-DRAWN
FINISH 125



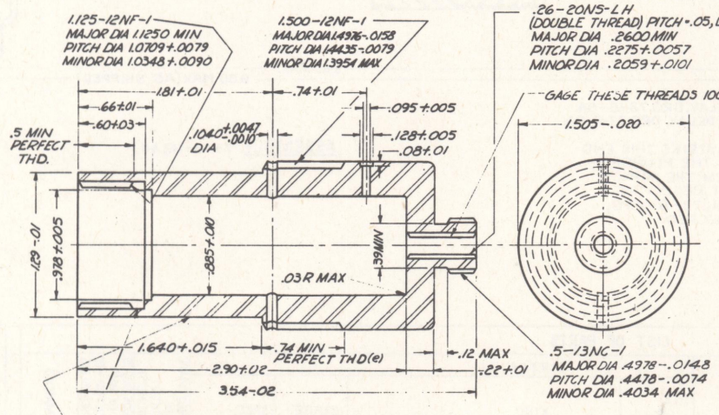
SECTION B-B



(d) TOLERANCE ON THIS DIMENSION MAY BE VARIED TO COMPLY WITH 6.13±.010 GAGING DIMENSION.

CUP, BEARING (ALTERNATIVE) 73-8-110B8
STEEL, FS X1314, COLD-DRAWN
FINISH 125 UNLESS OTHERWISE SPECIFIED.

PHYSICAL PROPERTIES	
Y.P.	
T.S.	
EL. 2	
RED.	
BR.	
ROCK.	

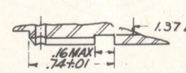


IMPERFECT THREADS OR UNDERCUT PERMITTED. DIAMETER OF UNDERCUT 1.135 MAX.

STAMP MANUFACTURER'S INITIALS OR SYMBOL IN 3/32 INCH LETTERS, APPROX 1. INCH FROM PRIMER DETONATOR END OF BODY.

(a) BODY (ALTERNATIVE) 73-8-110E8
STEEL, FS X1314, COLD-DRAWN
FINISH 125

(a) THIS PART PERTAINS ONLY TO THE AN-M100A2, AN-M101A2 AND AN-M102A2 FUZES. SEE DWG 73-8-3A FOR PROTECTIVE FINISHES AND ALTERNATIVE MATERIAL.



(e) ALTERNATIVE METHOD OF THREADING

THIS DRAWING FOR USE WITH THE FOLLOWING FUZES: AN-M100A2, AN-M101A2, AN-M102A2, M115, M116, M117, M132, M133, M134, M137 M160, M161 AND M162.

FUZES, BOMB, TAIL DETAILS.

SEPT 21, 1942	CLASS	DIVISION	DRAWING	FILE
REVISIONS	73	8	110	

7	8-15-45		
8	10-12-48		

TOLERANCE ON DIMENSIONS NOT OTHERWISE SPECIFIED
DECIMAL ±
FRACTIONAL ±
ANGULAR ±

D'FTSMAN	TRACER	ENGINEER
J.G.V.	FCB	
CHECKER		ENGINEER
A.C.V.		

SUBMITTED:
ORD. ENG., ORD. DEPT. U. S. A.

EXAMINED:
COL., ORD. DEPT. U. S. A.

APPROVED BY ORDER OF THE CHIEF OF ORDNANCE:
COL., ORD. DEPT. U. S. A.

ORDNANCE DEPT., U. S. A.

DRG. PERTAINS TO	
73-8-3	73-8-154
73-8-7	73-8-165
73-8-8	73-8-239
73-8-12	73-8-359
73-8-159	73-8-299
73-8-161	
73-8-163	
73-8-181	
73-8-183	
73-8-199	

D

SUPERSEDES 73-8-110 WITHOUT CHANGE OCT 12, 1948.

REMOVE ALL BURRS.

SCALE, INCHES, 1/1, 4/1, 2/1

NOTICE: THIS DRAWING SHALL NOT BE USED NOR REPRODUCED EITHER WHOLLY OR IN PART EXCEPT WHEN AUTHORIZED IN CONNECTION WITH UNITED STATES GOVERNMENT PROCUREMENT.

SIZE AND FORM OF LETTERS SHALL BE APPROX. AS SHOWN.

USE RED PRINTER'S INK, COMMERCIAL. PRINT ON ONE SIDE ONLY.

FUZE, M112A1 LOT □□□-□□□ □□ □-□□□

WARNING!
SPECIAL INSTRUCTIONS
M112A1 FUZE MAY BE USED IN 100 LB. M 30 DEMOLITION, 100 LB. A.N-M30GP, 250 LB. AN-M57 G.P., 300 LB. M31 DEMOLITION BOMBS ONLY. THIS FUZE IS EQUIPPED WITH COCKED FIRING PIN WHICH IS EXTREMELY SENSITIVE TO IMPACT AFTER FUZE IS ARMED. THE FUZE WILL ARM IN 100 FT. AIR TRAVEL WHICH MEANS THAT IF RELEASED FROM AIRCRAFT TRAVELING 100 FT/SEC. (68 M.P.H.) THE FUZE WILL ARM ABOUT 1.6 FT. BELOW THE PLANE, AT 200 FT/SEC. (136 M.P.H.) THE FUZE WILL ARM ABOUT 4 FT. BELOW THE PLANE, ETC. THE 8 TO 15 SEC. DELAY M-16A1 PRIMER DETONATOR ASSEMBLED TO THE FUZE, MAY BE REPLACED IN THE FIELD WITH A 4 TO 5 SEC. DELAY M-16 OR M16A1 PRIMER DETONATOR IF TACTICS SO REQUIRE.

5/32 in.

5 1/4

2 5/100

REMOVE PIN AFTER ARMING WIRE IS IN PLACE BUT BEFORE ATTACHING ARMING VANE. REPLACE PIN BEFORE REMOVING ARMING WIRE IF BOMB IS NOT DROPPED.

DEVELOPMENT OF CAP

STAMP WITH LETTERS AND FIGURES 1/8 HIGH AND .01 DEEP, DESIGNATION OF FUZE, LOADERS LOT NUMBER, LOADER'S INITIALS, AND DATE (MONTH AND YEAR) LOADED.
SAMPLE STAMPING:-"FUZE, M112A1, LOT1234, PA, 9-42

TAG, WARNING 73-8-112 B4

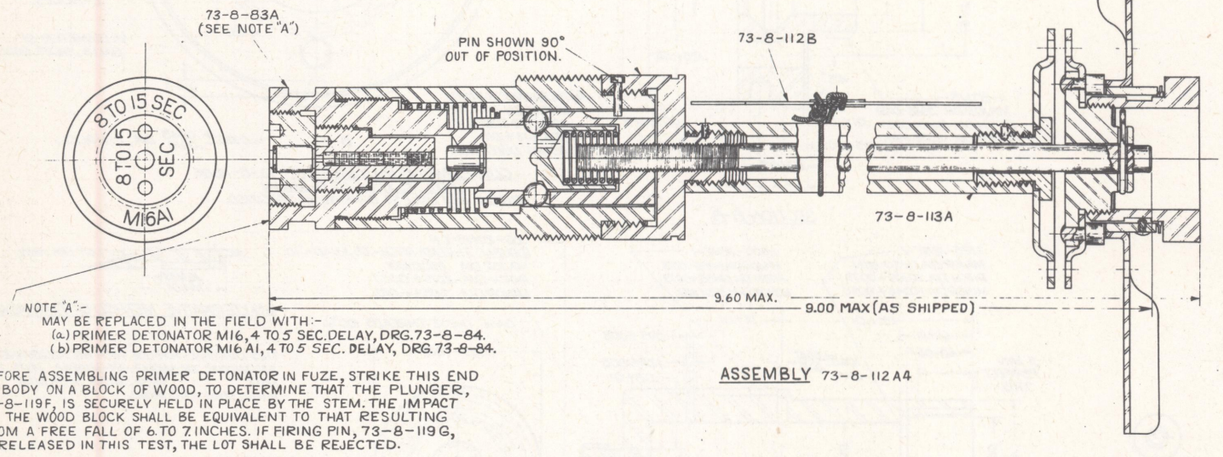
MANILA PAPER, TYPE 'B', SIZE NO. 6.
FIBER CONTENTS, 15JU, 15WO, OR 15SU.
STRUNG WITH COTTON TWINE, NO. 12.
SCALE 1/1.

SHOWN AS SHIPPED

VANE ASSEMBLY SHIPPED SEPARATE FROM FUZE.

LINE NO.	LIST OF DRAWINGS	DRAWING NUMBER
1	ASSEMBLY	73-8-112
2	METAL PARTS ASSEMBLY	73-8-113
3		
4	PRIMER DET. M16A1, 4 TO 5 SEC. (C)	73-8-84
5	PRIMER DET. M16A1, 8 TO 15 SEC.	73-8-83
6		
7		
8	PACKING BOX	76-16-416
9	PACKING AND MARKING OF BOX	20-4-467
10	CONTAINER	76-1-222
11		

(c) SHALL BE PROCURED AND ISSUED AS SEPARATE ITEM.



NOTE "A"-
MAY BE REPLACED IN THE FIELD WITH:-
(a) PRIMER DETONATOR M16, 4 TO 5 SEC. DELAY, DRG. 73-8-84.
(b) PRIMER DETONATOR M16A1, 4 TO 5 SEC. DELAY, DRG. 73-8-84.

BEFORE ASSEMBLING PRIMER DETONATOR IN FUZE, STRIKE THIS END OF BODY ON A BLOCK OF WOOD, TO DETERMINE THAT THE PLUNGER, 73-8-119F, IS SECURELY HELD IN PLACE BY THE STEM. THE IMPACT ON THE WOOD BLOCK SHALL BE EQUIVALENT TO THAT RESULTING FROM A FREE FALL OF 6 TO 7 INCHES. IF FIRING PIN, 73-8-119G, IS RELEASED IN THIS TEST, THE LOT SHALL BE REJECTED.

ASSEMBLY 73-8-112 A4

THIS FUZE FOR USE IN THE FOLLOWING BOMBS:-

BOMB, DEMOLITION, 300 LB., M 31.
BOMB, G.P., 100 LB., AN-M 30.
BOMB, G.P., 250 LB., AN-M 57.
BOMB, DEMOLITION, 100 LB., M 30.

LIST OF PARTS

LINE NO.	NAME OF PART	NUMBER REQ'D PER COMPONENT	PIECE-MARK	MATERIAL: SIZE OR FORM	MATERIAL: KIND	MATERIAL: GRADE	MATERIAL: SPEC. NUMBER	APPROXIMATE UNIT WEIGHT (POUNDS)	APPROX. GROSS WT. OF RAW STOCK PER 1000 ASSEMBLIES	REMARKS
1	ASSEMBLY		73-8-112A				AXS-819	2.3		
2	METAL PARTS ASSEMBLY		73-8-113A				AXS-820	1.9		
3	PRIMER DET. M16A1, 8 TO 15 SEC.		73-8-83A				AXS-826	.4		
4	TAG, WARNING	1	73-8-112B	NO. 6	MANILA PAPER	TYPE "B"	UU-T-81			
5					INK, PRINTER'S, RED		COMMERCIAL			

LINE NO.	LIST OF SPECIFICATIONS	SPEC. NUMBER *	REQUIRED BY
1	AMMUNITION, EXCEPT SMALL ARMS AMM. GENERAL SPEC. FOR	50-0-1	DRG. 73-8-112
2	FUZES, BOMB, TAIL, M112A1, M113A1, M114A1, LOADING, ASSEMBLING & PACKING	AXS-819	DRG. 73-8-112
3	FUZES, BOMB, TAIL, M112A1, M113A1, M114A1, METAL PARTS FOR	AXS-820	DRG. 73-8-112
4	TAGS, SHIPPING AND STOCK	UU-T-81	DRG. 73-8-112
5	PRIMER DETONATOR, M16A1, LOADING, ASSEMBLING AND PACKING	AXS-826	DRG. 73-8-112

* THE SPECIFICATION NUMBERS SHOWN ARE BASIC NUMBERS ONLY. WHEN A SPECIFICATION IS REVISED A LETTER IS AFFIXED TO ITS BASIC NUMBER. SPECIFICATIONS REFERRED TO IN THESE SPECIFICATIONS AND NOT LISTED HEREON, SHALL NOT APPLY.

0 1 2 3 4 5 INCHES

FUZE, BOMB, TAIL, M112 A1, 8 TO 15 SECONDS DELAY ASSEMBLY

OCTOBER 21, 1942

REVISIONS			
1	1-4-43		
2	5-20-43		
3	9-3-43		
4	8-15-45		

DRG. PERTAINS TO

CLASS	DIVISION	DRAWING	FILE
73	8	112	

TOLERANCE ON DIMENSIONS NOT OTHERWISE SPECIFIED
DECIMAL ±
FRACTIONAL ±
ANGULAR ±

DRAFTSMAN: MAN — TRACER: L.M — CHECKER: CB — CHIEF DRAFTSMAN: M.T.

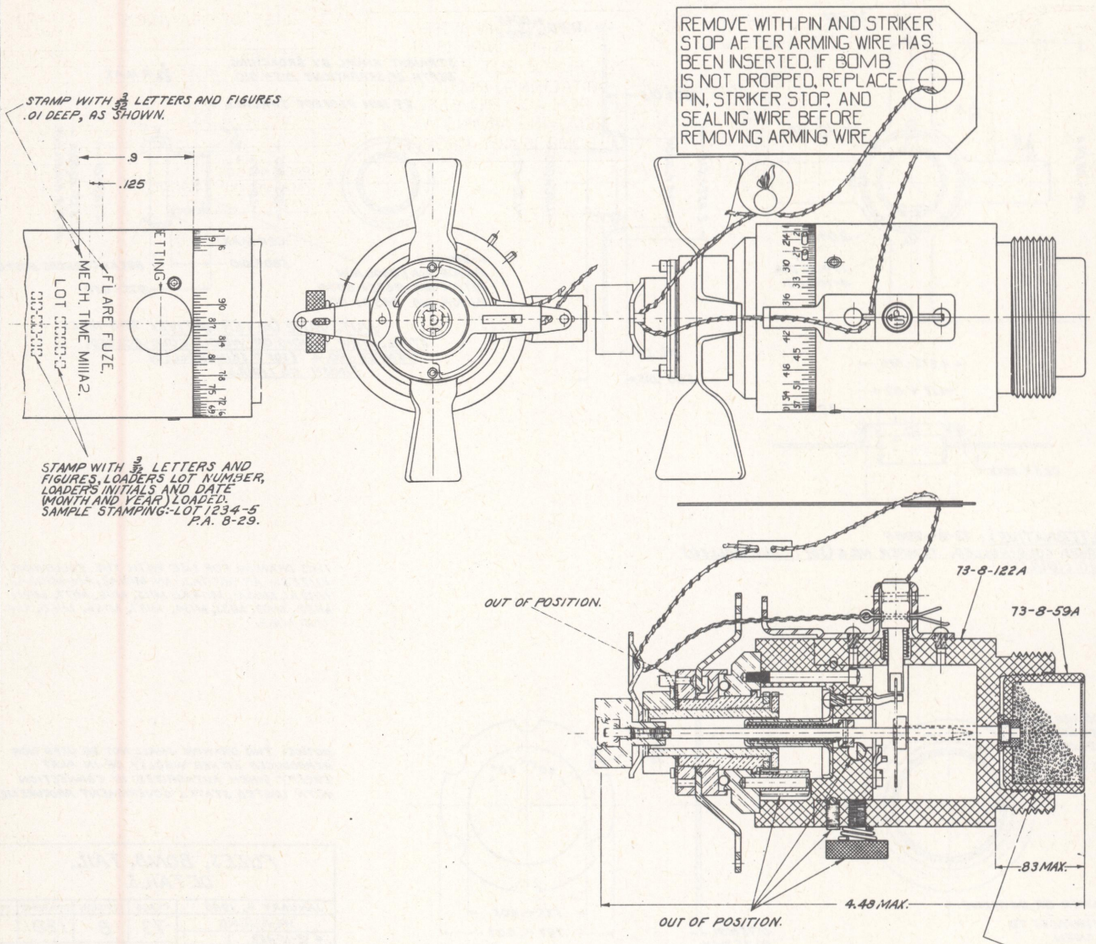
SUBMITTED:

EXAMINED: C V Santhuff

APPROVED BY ORDER OF THE CHIEF OF ORDNANCE:

D

ORDNANCE DEPT. U.S.A.



ASSEMBLY 73-8-121A3

LIST OF PARTS

LINE NO.	NAME OF PART	NUMBER REQD PER COMPONENT	PIECE-MARK	MATERIAL: SIZE OR FORM	MATERIAL: KIND	MATERIAL: GRADE	MATERIAL: SPEC. NUMBER	APPROXIMATE NET WEIGHT (GRAMS)	APPROX. GROSS WT. OF RAW STOCK PER 1000 ASSEMBLIES	REMARKS
1	ASSEMBLY		73-8-121A				50-17-24			
2										
3	BOOSTER CUP ASSEMBLY	1	73-8-59A							
4										
5	METAL PARTS ASSEMBLY	1	73-8-122A							
6	PRIMER, PERCUSSION, M26, ASSEMBLY	1	74-2-39A				50-68-1			
7										
8										
9	CHARGE, BOOSTER	1	73-8-59B		ARMY BLACK POWDER	A-4	50-14-1			
10	CUP, BOOSTER	1	73-8-59C	SHEET	ALUMINUM		QQ-A-561			(b)(c)
11										
12	DISC, CLOSING	1	73-8-59D	STRIP	GILDING METAL		57-171-2			
13										
14	HOLDER, PRIMER	1	73-8-59E	ROD	ALUMINUM-ALLOY	CONDITION*	QQ-A-351			
15										
16										
17										
18										
19					CEMENT, PETTMAN		50-11-8			
20					PAINT, ACID-PROOF BLACK	TYPE I	3-106			

(b) ALTERNATIVE MATERIAL:- ALUMINUM-ALLOY (AL-17), SPEC. QQ-A-353, OR (AL-24), SPEC. QQ-A-355, OR (AL-3), SPEC. QQ-A-359.
(c) ALTERNATIVE MATERIAL:- ALUMINUM-BASE-ALLOY; DIE CASTINGS, CLASS 5, SPEC AXS-679.

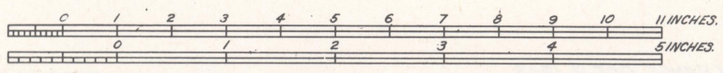
LIST OF SPECIFICATIONS

LINE NO.	LIST OF SPECIFICATIONS	SPEC. NUMBER *	REQUIRED BY
1	ALUMINUM-ALLOY (ALUMINUM-COPPER-MAGNESIUM-MANGANESE) BARS, RODS, ETC.	QQ-A-351	DRG. 73-8-59
2	ALUMINUM-BASE-ALLOY; DIE CASTINGS	AXS-679	DRG. 73-8-59
3	ALUMINUM: PLATES AND SHEETS	QQ-A-561	DRG. 73-8-59
4	AMMUNITION, EXCEPT SMALL ARMS AMMUNITION, GENERAL SPEC. FOR	50-0-1	DRG. 73-8-121
5	ALUMINUM-ALLOY (AL-17) (AL-CU-MG-MN); PLATES, SHEETS AND STRIPS	QQ-A-353	DRG. 73-8-59
6			
7	CEMENT, PETTMAN	50-11-8	DRG. 73-8-121
8	ALUMINUM-ALLOY (AL-24) (AL-CU-MG (1.5%)-MN); PLATES, SHEETS AND STRIPS	QQ-A-355	DRG. 73-8-59
9	FUZE, FLARE, MECHANICAL TIME, MIIIA2, LOADING, ASSEMBLING & PACKING	50-17-24	DRG. 73-8-121
10	FUZE, FLARE, MECHANICAL TIME, MIIIA2, METAL PARTS FOR, EXCEPT MOVEMENT	50-80-12	DRG. 73-8-59
11			
12	ALUMINUM-ALLOY (AL-3) (AL-MN); PLATES AND SHEETS	QQ-A-359	DRG. 73-8-59
13	METAL, GILDING (95/5 BRASS), SHEETS AND STRIPS	57-171-2	DRG. 73-8-59
14	METALS; GENERAL SPECIFICATION FOR INSPECTION OF	QQ-M-151	QQ-A-561
15	PAINT, ACID-PROOF BLACK, FOR AMMUN.	3-106	DRG. 73-8-59
16	POWDER, BLACK, ARMY	50-14-1	DRG. 73-8-59
17			
18			

*THE SPECIFICATION NUMBERS SHOWN ARE BASIC NUMBERS ONLY. WHEN A SPECIFICATION IS REVISED A LETTER IS AFFIXED TO ITS BASIC NUMBER. SPECIFICATIONS REFERRED TO IN THESE SPECIFICATIONS AND NOT LISTED HEREON, SHALL NOT APPLY.

LIST OF DRAWINGS

LINE NO.	LIST OF DRAWINGS	DRAWING NUMBER
1	ASSEMBLY	73-8-121
2	METAL PARTS ASSEMBLY	73-8-122
3	DETAILS	73-8-59
4	PRIMER, PERCUSSION, M26, ASSEMBLY	74-2-39
5	CAN, PACKING	76-1-573
6	BOX, PACKING	76-16-365
7	PACKING AND MARKING OF BOX	20-A-400
8		



FUZE, FLARE, MECHANICAL TIME, MIIIA2. ASSEMBLY.

DECEMBER 21, 1942

CLASS	DIVISION	DRAWING	FILE
73	8	121	

REVISIONS

1	3-28-44
2	10-12-44
3	2-21-45
4	5-19-65

TOLERANCE ON DIMENSIONS NOT OTHERWISE SPECIFIED
DECIMAL ±
FRACTIONAL ±
ANGULAR ±

DRAFTSMAN: NWF | TRACER: E.J.S. | ENGINEER:
CHECKER: S.S.D. | SENIOR ENGINEER: [illegible]

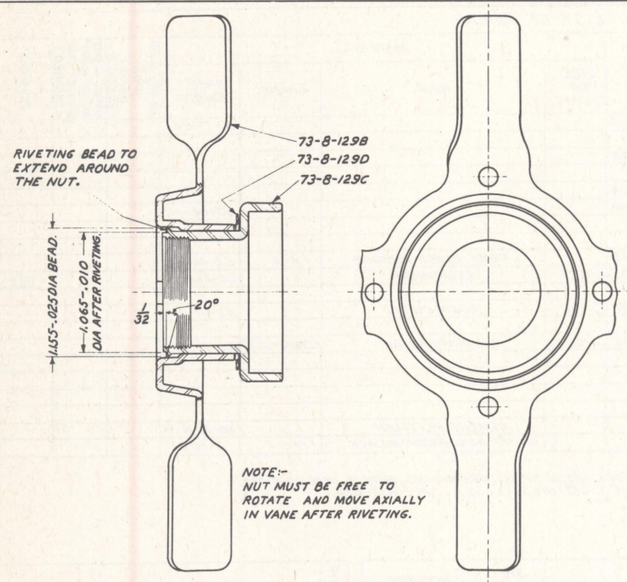
DRG. PERTAINS TO

SUBMITTED: [signature] MAJOR, ORD. DEPT. U.S.A.
EXAMINED: W. S. Bullman ORD. DEPT. U.S.A.
APPROVED BY ORDER OF THE CHIEF OF ORDNANCE: [signature] COLONEL, ORD. DEPT. U.S.A.

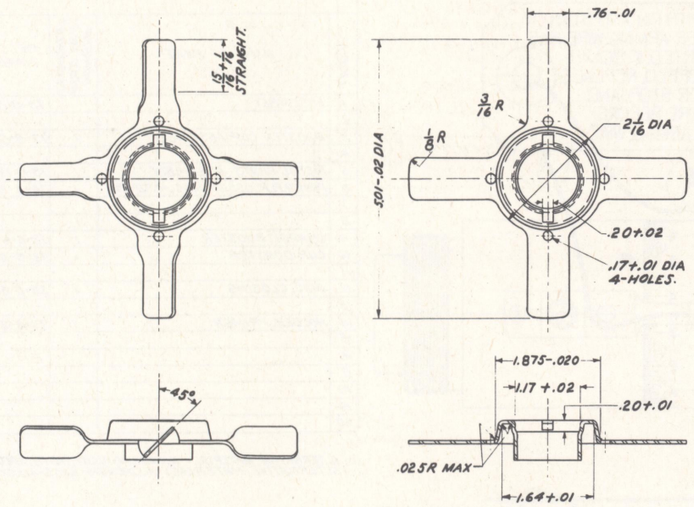
D

ORDNANCE DEPT. U.S.A.

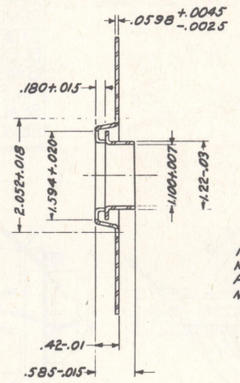
OBSOLESCENT

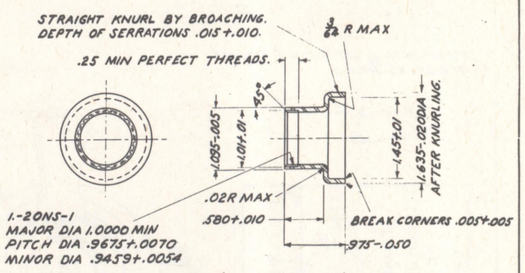


VANE ASSEMBLY (ALTERNATIVE) 73-8-129A1



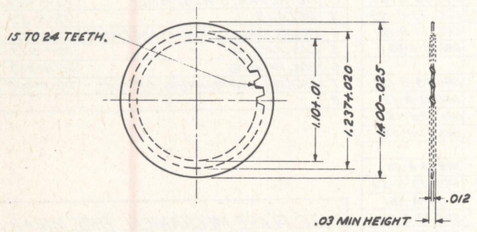
VANE (ALTERNATIVE) 73-8-129B5
STEEL, STRIP, WD1010 OR WD1015, COLD-ROLLED, TEMPER NO.4 (SOFT SKIN-ROLLED)
FINISH NO.1 (DULL)



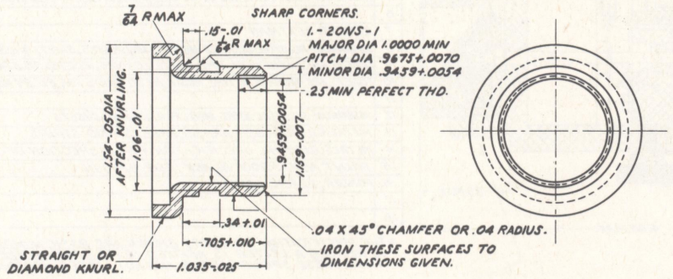


NUT, VANE (ALTERNATIVE) 73-8-129C5
STEEL, STRIP WD1010 OR WD1015, COLD-ROLLED,
TEMPER NO. 4 (SOFT SKIN-ROLLED)
FINISH NO. 1 (DULL)

THIS DRAWING FOR USE WITH THE FOLLOWING FUZES:- AN-M100A2, AN-M101A2, AN-M102A2, M112A1, M113A1, M114A1, M115, M116, M117, M121, M122, M132, M133, M134, M137, M156, M160, M161 AND M162.

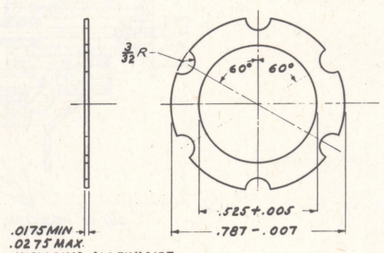


WASHER, LOCK (ALTERNATIVE) 73-8-129D5
SPRING STEEL, COMMERCIAL.



NUT, VANE (ALTERNATIVE) 73-8-129E5
STEEL, WD1010 TO WD1020. ADVISORY STOCK SIZE, .109 (12 GAGE) THICK.

NOTE:- NUT MAY BE MADE OF TWO PIECES, IN ACCORDANCE WITH APPROVED DESIGN, PROVIDED ALL REQUIREMENTS OF ONE PIECE DESIGN ARE COMPLIED WITH.



RETAINER, BALL 73-8-129F5
STEEL, CORROSION RESISTING, STRIP, CLASS 2, 4, 5 OR 6, FINISH NO. 1 OR 2, TEMPER NO. 3 OR 4.

SEE DWG 73-8-115A, OR 73-8-117A FOR PROTECTIVE FINISHES AND ALTERNATIVE MATERIALS.

NOTICE: THIS DRAWING SHALL NOT BE USED NOR REPRODUCED EITHER WHOLLY OR IN PART EXCEPT WHEN AUTHORIZED IN CONNECTION WITH UNITED STATES GOVERNMENT PROCUREMENT.

SUPERSEDES 73-8-129 WITHOUT CHANGE OCT 12, 1948.

REMOVE ALL BURRS.

SCALE, INCHES, -1, 2

FUZES, BOMB, TAIL, DETAILS.

JANUARY 4, 1943

CLASS	DIVISION	DRAWING	FILE
73	8	129	

REVISIONS

4	8-15-45
5	10-12-48

TOLERANCE ON DIMENSIONS NOT OTHERWISE SPECIFIED
DECIMAL ±
FRACTIONAL ±
ANGULAR ±

DRG PERTAINS TO

73-8-3	73-8-181
73-8-7	73-8-183
73-8-8	73-8-199
73-8-72	73-8-161
73-8-113	73-8-163
73-8-115	73-8-298
73-8-117	73-8-299
73-8-159	73-8-359
73-8-154	
73-8-165	

DRAFTSMAN NWF | TRACER B.D.C. | ENGINEER JHS
CHECKER A.C.J. 9-27-48 | ENGINEER

SUBMITTED:
ORD. ENG. ORD. DEPT. U.S.A.

EXAMINED:
COL., ORD. DEPT. U.S.A.

APPROVED BY ORDER OF THE CHIEF OF ORDNANCE
COL., ORD. DEPT. U.S.A.

D

ORDNANCE DEPT., U.S.A.

HEAT TREATMENT AND FINAL FINISH

STAMP AS INDICATED WITH LETTERS AND FIGURES 3/32 IN. HIGH & .01 DEEP.
A-LOADER'S LOT NUMBER.
B-DATE (MONTH AND YEAR) LOADED.

STRIP SEALING 73-8-169B
ADHESIVE TAPE, WHITE
½ X 10. LG APPROX

.1015 (NO. 38) DRILL
.16 ± .01 DEEP.

INSERT 1, 2, 6, OR 12 AS APPLICABLE.

73-8-175U

73-8-173M (SEE NOTE A)

¼ APPROX.

STAKE.

FUZE, BOMB, TAIL, M123A1, M124A1 AND M125A1. 1, 2, 6, AND 12 HOURS DELAY.

73-8-173N (SEE NOTE A)

SECTION A-A

DANGER
NEVER REMOVE THIS TAG.
THIS FUZE CONTAINS A BOOBY TRAP.
NEVER ATTEMPT TO REMOVE THIS FUZE FROM BOMB.

73-8-176G

SEE NOTE F.

73-8-343G, SECURE BY STAKING. COAT STAKE WITH PHENOL FORMALDEHYDE RESIN VARNISH.

SEE NOTE G

73-8-169E

.505 MAX AFTER STAKING

73-8-176A

INSTRUCTIONS
1- AFTER FUZE IS IN BOMB, TIGHTEN "PALN UT". PLACE VANE ASSEMBLY WITH SAFETY CATCH REMOVED ON CLIP HUB WITH HOLE IN VANE HUB. LOCATED SO AS TO ALIGN WITH HOLE IN CLIP HUB.
2- INSERT SAFETY CATCH AND SECURE HOOK END.
3- PASS ARMING WIRE THROUGH HOLES IN CLIP, ITEM DISC AND VANE.
4- REMOVE SAFETY PIN.
DO NOT UNSCREW FUZE DURING OR AFTER ASSEMBLY TO BOMB.

73-8-176T (SHOWN ACTUAL SIZE)

73-8-176W

73-8-343D

73-8-343K

73-8-169E

SEE NOTE G.

INSERT M123A1, M124A1 OR M125A1 AS APPLICABLE.

FUZE AS SHIPPED

.128 (NO. 30) DRILL, .36 ± .02 DEEP. INSERT PIN, 73-8-175F, AND SECURE BY STAKING, THEN COAT STAKE AND END OF PIN WITH PHENOL FORMALDEHYDE RESIN VARNISH.

.064 (NO. 52) DRILL, .15 ± .01 DEEP. INSERT PIN, 73-8-175E, AND SECURE BY STAKING, THEN COAT STAKE AND END OF PIN WITH PHENOL FORMALDEHYDE RESIN VARNISH.

73-8-343A

73-8-343H

73-8-174W
73-8-174S
73-8-174Z
73-8-174X
73-8-174Q
73-8-174R

AMPOULE ASSEMBLY (SEE TABLE).

73-8-176U

73-8-171N. TIGHTEN SET SCREW WITH A TORQUE OF 50 ± 5. IN LBS BEFORE TORQUE IS APPLIED TO LOCK NUT.

73-8-171O. ASSEMBLE ADAPTER WITH 800. ± 20. IN-LBS TORQUE.

3/16

1/4

73-8-171L
73-8-171M
73-8-172A
73-8-171A
73-8-175A (SEE NOTE B)
73-8-175W (SEE NOTE B)
73-8-175C (SEE NOTE B)
SEE NOTE G
73-8-169E
73-8-176R OR 73-8-176S (SEE NOTE D)
73-8-176Q OR 73-8-176P (SEE NOTE D)

VIEW SHOWING ASSEMBLY OF TAG TO BODY LOCK NUT
SCALE, F

.16 MIN

73-8-173R

73-8-175Z

73-8-175X

73-8-174U

73-8-171K

73-8-173K. ASSEMBLE RETAINER WITH 100. ± 5. IN-LBS TORQUE.

73-8-173W. ASSEMBLE NUT WITH 400. ± 10 IN-LBS TORQUE.

.014 MAX. CONTROL BY VARYING NUMBER OF SAFETY WASHERS.

SEE NOTE E

TUBE (SEE TABLE)
STEM ASSEMBLY (SEE TABLE).

73-8-173U

HOLE IN SLEEVE AND GROOVE ON STEM MUST BE ALIGNED BEFORE SAFETY PIN, 73-8-176W IS SEALED IN PLACE.

VANE ASSEMBLY SHIPPED SEPARATE FROM FUZE.

TO FACILITATE ASSEMBLY, AMPOULE RETAINER SEALING CUP, 73-8-175X MAY BE SECURED TO AMPOULE RETAINER, 73-8-173K BY APPLYING SHELLAC LIGHTLY TO ANNULAR FLAT SURFACE AT END OF AMPOULE RETAINER.

ENLARGED VIEW
SCALE, F

ASSEMBLY 73-8-169A10

FUZE	A	STEM ASSEMBLY	TUBE
M123A1	9.24 MAX	73-8-173A	73-8-171F
M124A1	12.24 MAX	73-8-173B	73-8-171G
M125A1	16.24 MAX	73-8-173C	73-8-171H

DELAY (HOURS)	FUZE DESIGNATION	AMPOULE ASSEMBLY	IDENTIFICATION
1	M123A1, M124A1 & M125A1	73-8-174A	1 DOT
2	M123A1, M124A1 & M125A1	73-8-174B	2 DOTS
6	M123A1, M124A1 & M125A1	73-8-174C	3 DOTS
12	M123A1, M124A1 & M125A1	73-8-174D	4 DOTS

OBVERSE AND REVERSE OF CAR SEAL

SEAL, CAR 73-8-169E
LEAD, COMMERCIAL
.5 DIA X .15 THICK (WITH NON-SLIP STEEL WIRE, .056 DIA X 6. LONG MIN)

NOTE:-
D- USE PIN 73-8-176S AND TAG 73-8-176P ON M124A1 AND M125A1 FUZES ONLY. USE PIN 73-8-176R AND TAG 73-8-176Q ON M123A1 FUZES ONLY.
E- AFTER ASSEMBLY, FUZE MUST ASSEMBLE IN CHAMBER GAGE, INCLUDING 1.5-12NF-1 THREAD AND A CONCENTRIC BORE OF 1.33 TO A DEPTH OF 3. INCHES MIN.

0 1 2 3 4 5 INCHES

LINE NO	LIST OF DRAWINGS	DRAWING NUMBER
1	ASSEMBLY	73-8-169
2	LIST OF SPECIFICATIONS	73-8-169A
3	LIST OF PARTS	73-8-169B
4		
5	DETAILS	73-8-171
6	DETAILS	73-8-172
7	DETAILS	73-8-173
8	DETAILS	73-8-174
9	DETAILS	73-8-175
10	DETAILS	73-8-176
11	DETAILS	73-8-343
12	DETONATOR, M19A2	73-2-186
13		
14		
15		
16		
17		
18		
19	CONTAINER (FUZE, M123A1)	76-1-543
20	CONTAINER (FUZE, M124A1)	76-1-544
21	CONTAINER (FUZE, M125A1)	76-1-545
22	BOX, PACKING	76-16-357
23	PACKING AND MARKING OF BOX	20-4-390

NOTICE: THIS DRAWING SHALL NOT BE USED NOR REPRODUCED EITHER WHOLLY OR IN PART EXCEPT WHEN AUTHORIZED IN CONNECTION WITH UNITED STATES GOVERNMENT PROCUREMENT.

FUZE, BOMB, TAIL, M123A1, M124A1 AND M125A1. 1, 2, 6, AND 12 HOURS DELAY. ASSEMBLY.

JUNE 7, 1943	CLASS	DIVISION	DRAWING	FILE
REVISIONS	73	8	169	
9 8-15-45				
10 10-12-48				

TOLERANCE ON DIMENSIONS NOT OTHERWISE SPECIFIED
DECIMAL ±
FRACTIONAL ±
ANGULAR ±

D'FTSMAN	TRACER	ENGINEER
H.O.	FCB	
CHECKER		ENGINEER
ACJ		

SUBMITTED:-
ORD. ENG., ORD. DEPT., U.S.A.

EXAMINED:-
COL., ORD. DEPT., U.S.A.

APPROVED BY ORDER OF THE CHIEF OF ORDNANCE:-
COL., ORD. DEPT., U.S.A.

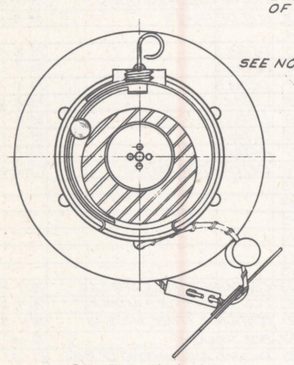
DRG. PERTAINS TO

D

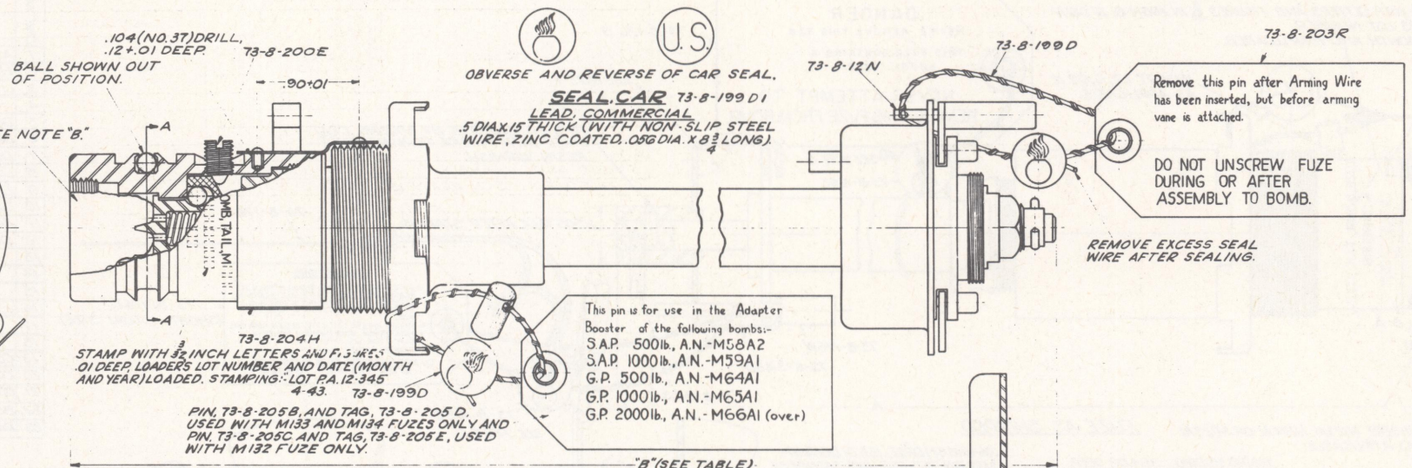
ORDNANCE DEPT., U.S.A.

SUPERSEDES 73-8-169 WITHOUT CHANGE OCT 12, 1948.

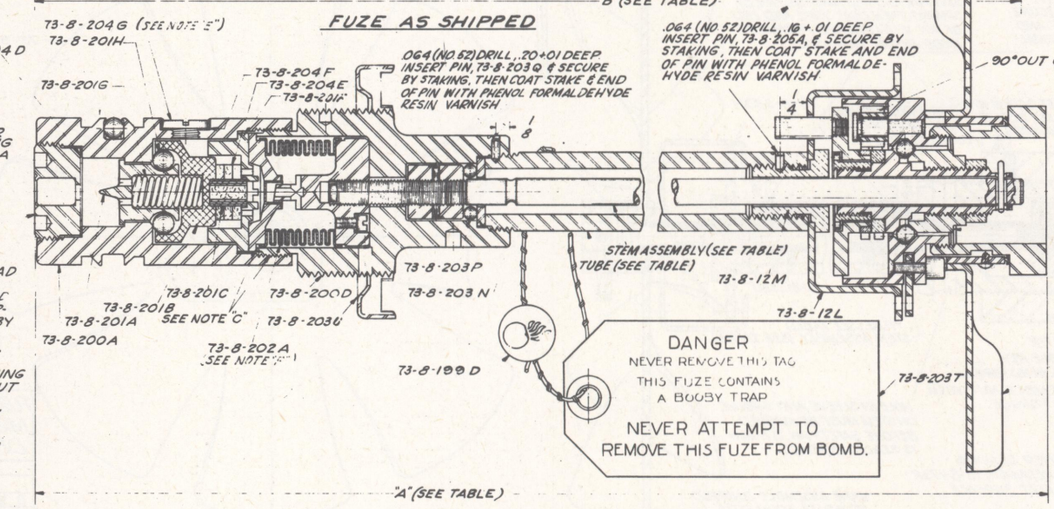
LINE NO	LIST OF DRAWINGS	DRAWING NUMBER
1	ASSEMBLY	73-8-199
2	LIST OF SPECIFICATIONS	73-8-199A
3	LIST OF PARTS	73-8-199B
4	DETAILS	73-8-200
5	DETAILS	73-8-201
6	DETAILS	73-8-202
7	DETAILS	73-8-203
8	DETAILS	73-8-204
9	DETAILS	73-8-205
10	DETAILS	73-8-4
11	DETAILS	73-8-12
12	DETAILS	73-4-13
13	DETAILS	73-8-110
14	DETAILS	73-8-129
15	DETONATOR, M19A2	73-2-186
16		
17		
18		
19		
20		
21	CONTAINER METAL	76-1-654
22	PACKING AND MARKING OF CONTAINER	76-1-655
23	BOX, PACKING	76-16-395
24	BOX, PACKING, DETAILS	76-16-394
25	PACKING AND MARKING OF BOX	20-4-443

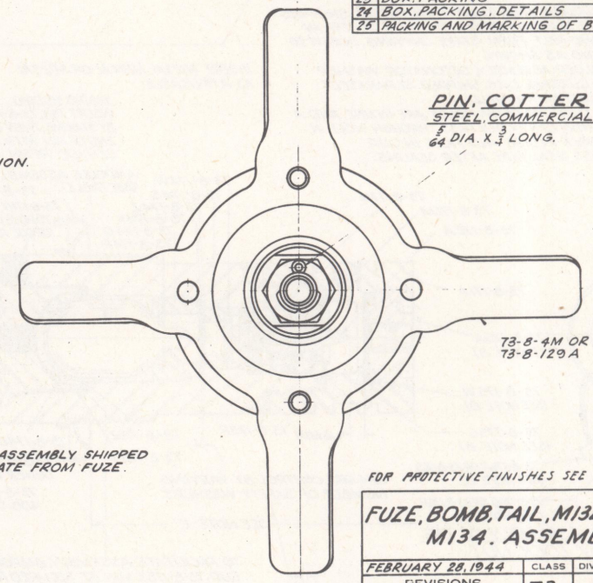


SECTION A-A



FUZE AS SHIPPED





VANE ASSEMBLY SHIPPED SEPARATE FROM FUZE.

PIN, COTTER 73-8-199E1
STEEL, COMMERCIAL
5/64 DIA. X 3/4 LONG.

NOTE "E":-
REMOVE SHIPPING SCREW, 73-8-200E, AND ASSEMBLE CLOSING SCREW WASHER AND CLOSING SCREW BEFORE ASSEMBLING DETONATOR HOLDER ASSEMBLY, 73-8-204A TO FUZE.

NOTE "F":-
PRIOR TO ASSEMBLY OF ARMING HEAD ASSEMBLY AND AFTER ASSEMBLING THE ARMING STEM ASSEMBLY, TUBE AND STEM GUIDE, AND WITH FUZE HELD IN UP-RIGHT POSITION, ROTATE ARMING STEM BY HAND, COUNTERCLOCKWISE, AS VIEWED FROM STEM END, AS FAR AS POSSIBLE. THEN, ROTATE STEM CLOCKWISE NOT MORE THAN 45°, THEN ASSEMBLE ARMING HEAD ASSEMBLY TO THE FUZE WITHOUT CHANGING POSITION OF ARMING STEM, AND SEAL SAFETY PIN IN PLACE. CHECK EACH FUZE FOR PROPER ASSEMBLY OF BELLOWS ASSEMBLY THROUGH 1/8 INCH INSPECTION HOLE, LOCATED IN HEAD.

ASSEMBLY (a)

NOTE "A":-
DETONATOR HOLDER ASSEMBLY, HOLDER SEALING WASHER, SHIPPED SEPARATELY AND ASSEMBLED IN THE FIELD.

NOTE "B":-
SHIP FUZE WITH ABSORBENT COTTON IN DETONATOR HOLDER CAVITY. IF COTTON INDICATES EVIDENCE OF LEAKAGE OF ACETONE, DETONATOR HOLDER ASSEMBLY SHALL NOT BE ASSEMBLED AND FUZE DESTROYED.

FUZE	PIECEMARK (a)	DIMENSION "A"	DIMENSION "B"	STEM ASSEMBLY	TUBE
M132	73-8-199A2	9.57 MAX.	9.32 MAX.	73-8-203A	73-8-203K
M133	73-8-199B2	12.57 MAX.	12.32 MAX.	73-8-203B	73-8-203L
M134	73-8-199C2	16.57 MAX.	16.32 MAX.	73-8-203C	73-8-203M

NOTE "C":-
SEAL HEAD TO BODY AND BELLOWS HOLDER AS FOLLOWS:- APPLY TWO COATS OF RUBBER CEMENT TO FACE OF HEAD THAT CONTACTS BELLOWS HOLDER, ALLOW FIRST COAT TO DRY BEFORE APPLYING SECOND COAT. APPLY TWO COATS OF RUBBER CEMENT TO FLANGE OF BELLOWS ASSEMBLY THAT CONTACTS HEAD, ALLOW FIRST COAT TO DRY BEFORE APPLYING SECOND COAT. COAT THREADS OF HEAD WITH WHITE LEAD AFTER TWO THREADS HAVE ENTERED BODY. AT ASSEMBLY, HEAD SHOULD BE ASSEMBLED TO BODY WITH APPROXIMATELY 300 ± 10 INCH-LBS. TORQUE TO ASSURE SEATING OF INTERNAL PARTS.

NOTE "D":-
AFTER ASSEMBLY, FUZE MUST ASSEMBLE IN CHAMBER GAGE, INCLUDING 1.5-12 N.F.-1 THREADS AND A CONCENTRIC BORE OF 1.33.

0 1 2 3 4 5 INCHES

FOR PROTECTIVE FINISHES SEE DRG. 73-8-1998.

FUZE, BOMB, TAIL, M132, M133 AND M134. ASSEMBLY.

FEBRUARY 28, 1944	CLASS	DIVISION	DRAWING	FILE
REVISIONS	73	8	199	
1 7-24-44				
2 9-12-44				

TOLERANCE ON DIMENSIONS NOT OTHERWISE SPECIFIED
DECIMAL ±
FRACTIONAL ±
ANGULAR ±

DRG. PERTAINS TO

DFTSMAN	TRACER	ENGINEER
MAN	MAN	JER
CHECKER		ENGINEER
J.A.F.		M.T.

SUBMITTED:- Milton Cage, COL. ORD DEPT. U.S.A.

EXAMINED:- R. G. Bullock Jr., COL. ORD DEPT. U.S.A.

APPROVED BY ORDER OF THE CHIEF OF ORDNANCE:- [illegible], COL. ORD DEPT. U.S.A.

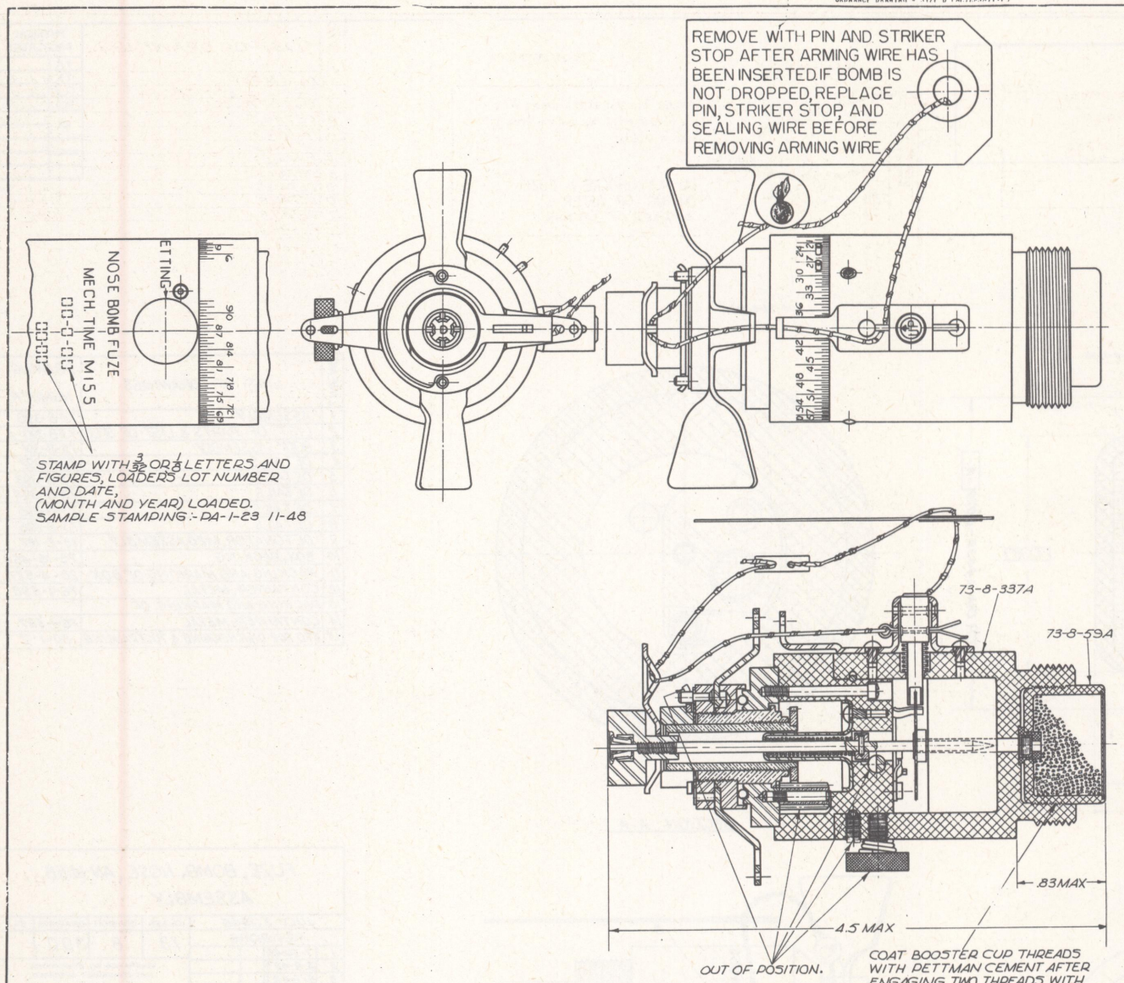
D

ORDNANCE DEPT. U.S.A.

P-62562

ORDNANCE DRAWING - SIZE D (ALTERNATIVE)

CL & DIV D



ASSEMBLY 73-8-336A3

LIST OF PARTS

LINE NO.	NAME OF PART	NUMBER REQ'D PER COMPONENT	PIECE MARK	MATERIAL: SIZE OR FORM	MATERIAL: KIND	MATERIAL: GRADE	MATERIAL: SPEC NUMBER	APPROXIMATE UNIT WEIGHT (GRAINS)	APPROX GROSS WT OF ASSY WITH LOOSE ASSEMBLIES	REMARKS
1	ASSEMBLY		73-8-336A				50-43-4			
2										
3	BOOSTER CUP ASSEMBLY	1	73-8-59A							
4										
5	METAL PARTS ASSEMBLY	1	73-8-337A							
6	PRIMER, PERCUSSION, M26, ASSEMBLY	1	74-2-39A				50-68-1			
7										
8	CHARGE, BOOSTER	1	73-8-59B		BLACK POWDER	A-4	JAN-P-223			
9	CUP, BOOSTER	1	73-8-59C	SHEET	ALUMINUM	TYPE I	QQ-A-561			(f)(c)
10										
11	DISC, CLOSING	1	73-8-59D	STRIP	GILDING METAL		JAN-G-439			
12										
13	HOLDER, PRIMER	1	73-8-59E	ROD	ALUMINUM-ALLOY	CONDITION T	QQ-A-351			
14										
15					CEMENT, DETTMAN		JAN-C-99			
16					PAINT, ACID-PROOF BLACK	TYPE I	JAN-P-450			
17										

(c) ALTERNATIVE MATERIAL:- ALUMINUM-BASE-ALLOY; DIE CASTINGS, CLASS 5, SPEC AXS-679.
(f) ALTERNATIVE MATERIAL:- ALUMINUM-ALLOY (AL-17) SPEC QQ-A-353 (AL-24) SPEC QQ-A-355 OR (AL-3) SPEC QQ-A-359.

LIST OF SPECIFICATIONS

LINE NO.		SPEC NUMBER	REQUIRED BY
1	ALUMINUM-ALLOY (ALUMINUM-COPPER-MAGNESIUM-MANGANESE) BARS, RODS	QQ-A-351	DWG 73-8-59
2	ALUMINUM-BASE-ALLOY; DIE CASTING	AXS-679	DWG 73-8-59
3	ALUMINUM; PLATES AND SHEETS	QQ-A-561	DWG 73-8-59
4	AMMUNITION, EXCEPT SMALL ARMS AMMUNITION, GENERAL SPEC FOR	50-0-1	DWG 73-8-336
5	ALUMINUM-ALLOY (AL 17) (AL-CU-MG-MN); PLATES, SHEETS AND STRIPS	QQ-A-353	DWG 73-8-59
6	ALUMINUM-ALLOY (AL-24) (AL-CU-MG (1.5%)-MN) PLATES, SHEETS AND STRIPS	QQ-A-355	DWG 73-8-59
7	ALUMINUM-ALLOY (AL-3) (AL-MN); PLATES AND SHEETS	QQ-A-359	DWG 73-8-59
8	CEMENT, DETTMAN	JAN-C-99	DWG 73-8-336
9	FUZES, BOMB, MECHANICAL TIME, LOADING, ASSEMBLING & PACKING	50-43-4	DWG 73-8-336
10	FUZES, BOMB, MECHANICAL TIME, PARTS FOR	50-80-21	DWG 73-8-336
11	GILDING METAL (95/5 BRASS), SHEETS AND STRIPS	JAN-G-439	DWG 73-8-59
12	METALS; GENERAL SPECIFICATION FOR INSPECTION OF	QQ-M-151	QQ-A-561
13	PAINT, ACID-PROOF BLACK, FOR AMMONITION	JAN-P-450	DWG 73-8-59
14	POWDER, BLACK	JAN-P-223	DWG 73-8-59
15	PRIMER, PERCUSSION, M26	50-68-1	DWG 73-8-336

* THE SPECIFICATION NUMBERS SHOWN ARE BASIC NUMBERS ONLY. WHEN A SPECIFICATION IS REVISED A LETTER IS AFFIXED TO ITS BASIC NUMBER. SPECIFICATIONS REFERRED TO IN THESE SPECIFICATIONS AND NOT LISTED HEREON, SHALL NOT APPLY.

LIST OF DRAWINGS

LINE NO		DRAWING NUMBER
1	ASSEMBLY	73-8-336
2	METAL PARTS ASSEMBLY	73-8-337
3	DETAILS	73-8-59
4	PRIMER, PERCUSSION, M26, ASSEMBLY	74-2-39
5		
6	CAN, PACKING	76-1-579
7	BOX, PACKING	76-16-365
8	PACKING AND MARKING OF BOX	20-4-400

NOTICE:- THIS DRAWING SHALL NOT BE USED NOR REPRODUCED EITHER WHOLLY OR IN PART EXCEPT WHEN AUTHORIZED IN CONNECTION WITH UNITED STATES GOVERNMENT PROCUREMENT.

FUZE, BOMB, NOSE, MECH TIME, M155. ASSEMBLY.

CLASS 73 | DIVISION 8 | DRAWING 336

DRAWING PERTAINS TO:

ORIGINAL DATE OF DRAWING JULY 29, 1944

REVISIONS
3 11-18-48
4 6-10-49

WEIGHT — | TO BE MADE 00 | APPLY PART NO (As Specified)

SCALE — | F.J.M. | A.C.J.

E.J.S. | C.G.S.

SUBMITTED

APPROVED

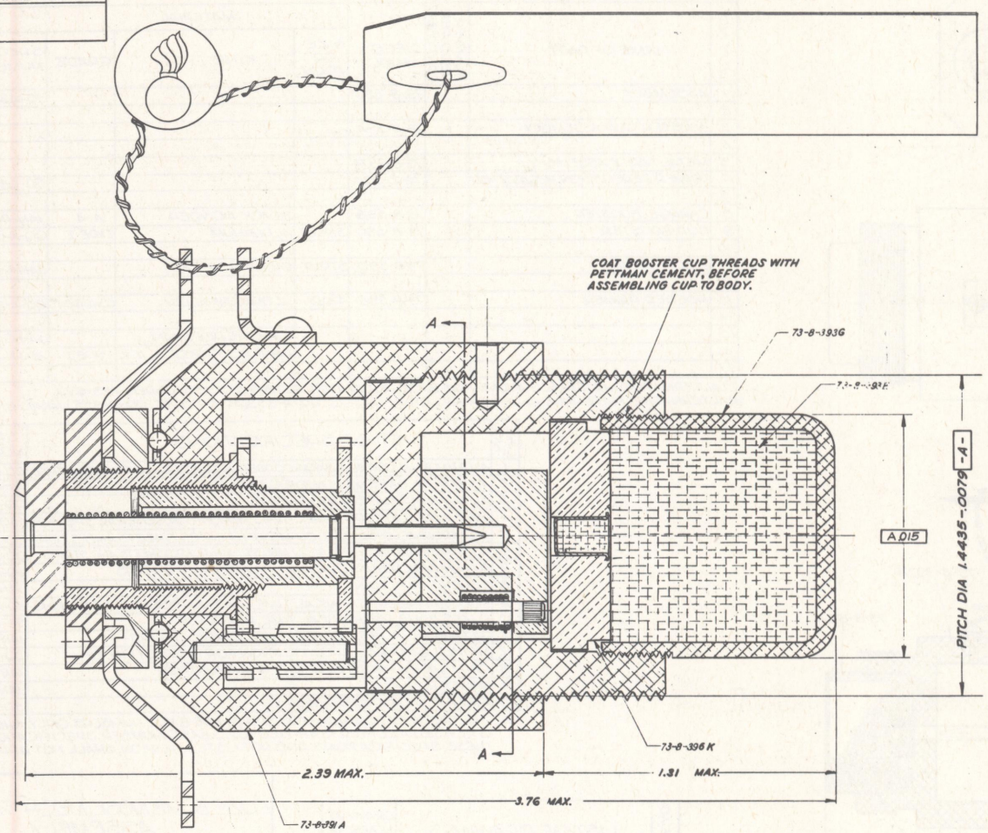
D

SUPERSEDES 73-8-336 WITHOUT CHANGE JUNE 10, 1949

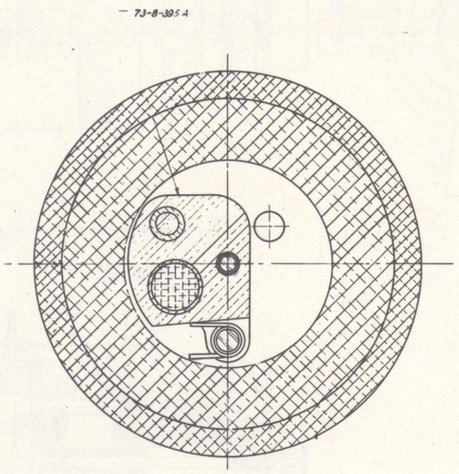
0 1 2 3 4 5 6 7 8 9 10 11 INCHES
0 1 2 3 4 5 INCHES

HEAT TREATMENT AND FINAL FINISH

PHYSICAL PROPERTIES	
Y.P.	
T.S.	
EL. 2	
RED.	
BR.	
ROCK.	

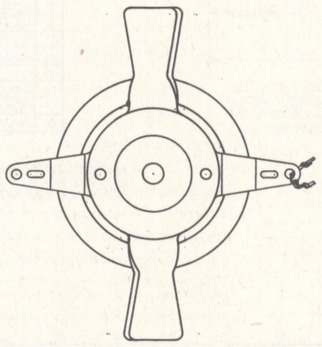


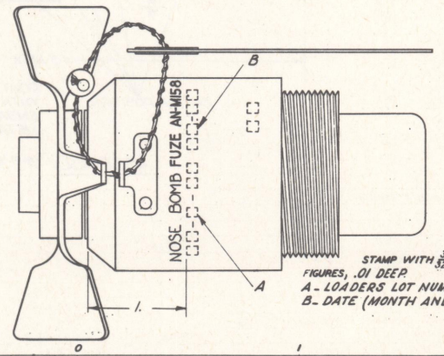
ASSEMBLY 73-B-390 A-4
WEIGHT - 1.02 LBS. APPROX.



SECTION A-A

LINE NO.	LIST OF DRAWINGS	DRAWING NUMBER
1	ASSEMBLY	73-B-390
2	LIST OF PARTS & LIST OF SPEC.	73-B-390-A
3	BODY ASSEMBLY	73-B-391
4	DETAILS	73-B-392
5	DETAILS	73-B-393
6	DETAILS	73-B-394
7	DETAILS	73-B-395
8	DETAILS	73-B-396
9	DETONATOR, M20 ASSEMBLY	73-2-187
10	BOX, PACKING	76-15-450
11	PACKING AND MARKING OF BOX	20-4-577
12	CONTAINER, METAL	76-1-598
13	PACKING AND MARKING OF	
14	CONTAINER, METAL	76-1-597
15	STD FOR DIMENSIONING & TOLERANCING	30-1-7





STAMP WITH 3/32 LETTERS AND FIGURES, .01 DEEP.
A- LOADERS LOT NUMBER.
B- DATE (MONTH AND YEAR) LOADED.

0 1 2 INCHES

FUZE, BOMB, NOSE, AN-M158. ASSEMBLY

JULY 3, 1945	CLASS	DIVISION	DRAWING	FILE
REVISIONS	73	8	390	

1	7-26-45		
2	9-6-45		
3	9-1-46		
4	8-8-50		

TOLERANCE ON DIMENSIONS NOT OTHERWISE SPECIFIED
DECIMAL ±
FRACTIONAL ±
ANGULAR ±

DRG. PERTAINS TO

D'FTSMAN	TRACER	ENGINEER
H.C.	E.D.	
CHECKER		ENGINEER
C.K.		

SUBMITTED:-
R.H. Bassett Col. ORD. DEPT., U.S.A.

EXAMINED:-
Col. ORD. DEPT., U.S.A.

APPROVED BY ORDER OF THE CHIEF OF ORDNANCE:-
MAJ. GEN. ORD. DEPT., U.S.A.

D

ORDNANCE DEPT., U.S.A.

LIST OF PARTS

LINE NO.	NAME OF PART	NUMBER REQD. PER COMPONENT	PIECE MARK	MATERIAL: SIZE OR FORM	MATERIAL: KIND	MATERIAL: GRADE	MATERIAL: SPEC. NUMBER	APPROXIMATE UNIT WEIGHT (GRAINS)	APPROX. GROSS WT. OF RAW STOCK PER 1000 ASSEMBLIES	REMARKS
1	ASSEMBLY		73-B-390A				MIL-F-1306			
2	BODY ASSEMBLY		73-B-391A				MIL-F-1278			
3	ARMING HUB ASSEMBLY		73-B-393B							
4	ARMING SLEEVE ASSEMBLY		73-B-393G							
5	FIRING-PIN STRIKER ASSEMBLY		73-B-392A							
6	LEAD CUP ASSEMBLY		73-B-393H							
7	DETONATOR M20, ASSEMBLY	1	73-2-187A							
8	ROTOR LOADING ASSEMBLY		73-B-395A							
9	ROTOR ASSEMBLY		73-B-395K							
10	LEAD CUP DISC ASSEMBLY		73-B-396K							
11										
12	BALL	9	73-B-395F		STAINLESS STEEL		COMMERCIAL			
13	BODY	1	73-B-392D	BAR	ALUMINUM ALLOY	CONDITION "T"	QQ-A-351			(b)(a)(q)
14										
15										
16	CAGE, OUTER BALL	1	73-B-396H	STRIP	BRASS	COMP. "C", "D", OR "E"	QQ-B-611			
17	CHARGE, LEAD CUP	1	73-B-393K		TETRYL		JAN-T-339			
18	CUP, BOOSTER	1	73-B-393G		ALUMINUM DIE CAST ALLOY	CLASS 3	AXS-679			(m)(p)
19	CUP, LEAD	1	73-B-393F	SHEET	GILDING METAL		JAN-G-439			
20										
21										
22	DISC, LEAD CUP	1	73-B-396E	BAR	BRASS	COMP. "B"	QQ-B-611			
23										
24							COMMERCIAL			(d)
25	GEAR, MOVABLE	1	73-B-394E	STRIP	BRASS		COMMERCIAL			(d)
26	GEAR, STATIONARY	1	73-B-394F	STRIP	BRASS					
27	GUIDE, ARMING WIRE	1	73-B-393D	STRIP	STEEL	WD 1010 TO WD 1035	57-136			(na)
28										
29										
30	HOLDER, BOOSTER	1	73-B-392F	BAR	ALUMINUM-ALLOY	CONDITION "T"	QQ-A-351			a)(e,(b)
31	HUB, ARMING	1	73-B-394A	ROD	BRASS	"B" HALF HARD	QQ-B-611			
32										
33										
34	NUT	1	73-B-394D	BAR	STEEL	FS 1117	QQ-S-633			(e)(na)(h)
35										
36										
37	PELLET, BOOSTER	1	73-B-393E		TETRYL	I, CLASS a OR b	JAN-T-339			
38										
39	PIN, DETENT	1	73-B-396G	ROD	BRASS	COMP. "B"	QQ-B-611			
40	PIN, FIRING	1	73-B-392B	BAR	STEEL	FS-1117	QQ-S-633			(na)(h)(g)
41	PIN, LOCK	1	73-B-392E	ROD	ALUMINUM ALLOY	CONDITION "T"	QQ-A-351			(g)
42	PIN, PINION	1	73-B-396D	BAR	STEEL, CORROSION RESISTING	CLASS 6, TYPE E	QQ-S-763			
43	PIN, ROTOR	1	73-B-396B	BAR	STEEL, CORROSION RESISTING	CLASS 6, TYPE E	QQ-S-763			
44	PINION	1	73-B-394G	ROD	BRASS	"B" HALF HARD	QQ-B-611			
45										
46										
47	RACE, OUTER BALL	1	73-B-394C	BAR	STEEL	FS-1117	QQ-S-633			(e) (na)
48	RING, RETAINING	1	73-B-396G	WIRE	PHOSPHOR BRONZE, SPRING WIRE, SPRING TEMPER	ASTM B159 ALLOY A	QQ-W-401			(c)
49	ROTOR		73-B-392G	ROD	BRASS	COMP "B" HALF HARD	QQ-B-611			
50	SCREW, DRIVE (ALTERNATIVE)		73-B-395D		STEEL		COMMERCIAL			(na)
51	SCREW, DRIVE	2	73-B-395E		STEEL		COMMERCIAL			(na)(s)
52	SEAL, CAR	1	73-B-396A		LEAD		COMMERCIAL			
53										
54	SLEEVE, ARMING	1	73-B-394B	ROD	BRASS	"B" HALF HARD	QQ-B-611			
55	SLEEVE, DETENT	1	73-B-396F	ROD	BRASS	"B" HALF HARD	QQ-B-611			
56	SPRING, DETENT	1	73-B-395C	WIRE	STEEL, MUSIC WIRE	COMP. A	QQ-W-470			(nb)
57	SPRING, FIRING PIN	1	73-B-395H	WIRE	STEEL, MUSIC WIRE	COMP. A	QQ-W-470			(nb)
58	SPRING, ROTOR	1	73-B-395G	WIRE	STEEL, MUSIC WIRE	COMP. A	QQ-W-470			(nb)
59	STRIKER	1	73-B-392C	BAR	STEEL,	FS 1117	QQ-S-633			(na)(k)(b)
60										
61										
62	TAG, SEAL	1	73-B-365B	SIZE NO.1	MANILA PAPER	TYPE B	UU-T-81			
63										
64						WD 1010 TO WD 1035	57-136			
65	VANE	1	73-B-393A	STRIP	STEEL					(na)(l)
66					LACQUER ENAMEL, RED AND CLEAR	I	JAN-L-73			
67					CEMENT, PETTMAN		JAN-C-99			
68					INK, PRINTERS, BLACK		COMMERCIAL			
69					GRAPHITE, COLLOIDAL		COMMERCIAL			
70					VARNISH, PHENOL FORMALDEHYDE RESIN		3-167			
71					GRAPHITE	I OR II	JAN-G-155			
72					BARIUM STEARATE		JAN-B-366			
73					CALCIUM STEARATE		JAN-C-263			

HEAT TREATMENT AND FINAL FINISH

LIST OF SPECIFICATIONS

LINE NO.		SPEC. NUMBER *	REQUIRED BY
1	AMMUNITION, EXCEPT SM ALL ARMS AMMUNITION GEN'L. SPEC. FOR	50-0-1	73-B-390
2	ALUMINUM-BASE ALLOY; DIE CASTINGS	AXS-679	73-B-393
3	ALUMINUM-ALLOY (AL-17) (ALUMINUM-COPPER-MAGNESIUM-MANGANESE); BARS, ETC.	QQ-A-351	73-B-392
4	ALUMINUM-ALLOY (AL-24) (ALUMINUM-COPPER-MAGNESIUM (1.50%)-MANGANESE); BARS, ETC.	QQ-A-354	73-B-392
5	ALUMINUM, PLATES AND SHEETS	QQ-A-561	73-B-393
6	BRASS, COMMERCIAL; BARS, PLATES, RODS, SHAPES, SHEETS, STRIPS	QQ-B-611	73-B-396
7	ALUMINUM-ALLOY (AL-17) (ALUMINUM-COPPER-MAGNESIUM-MANGANESE) PLATES, ETC.	QQ-A-353	73-B-393
8	ALUMINUM-ALLOY (AL-24) (ALUMINUM-COPPER-MAGNESIUM (1.5%) MANGANESE) PLATES, ETC.	QQ-A-355	73-B-393
9	METALS, GENERAL SPECIFICATION FOR INSPECTION OF	QQ-M-151	QQ-B-611
10	METAL, GILDING, (95/5 BRASS) SHEETS AND STRIPS	JAN-G-439	73-B-393
11	FUZE, BOMB, NOSE, AN-M158 AND AN-M159, LOADING, ASSEMBLING AND PACKING	MIL-F-1306	73-B-390
12	FUZE, BOMB, NOSE, AN-M158 AND AN-M159, PARTS FOR	MIL-F-1278	73-B-391
13	PAPER, GENERAL SPECIFICATIONS	UU-P-31	UU-T-81
14	FINISHES; PROTECTIVE, FOR IRON AND STEEL PARTS	57-0-2	73-B-393
15	ALUMINUM-ALLOY (AL-3) (ALUMINUM-MANGANESE) PLATES AND SHEETS	QQ-A-359	73-B-393
16	STEEL, GARBON; BARS (GENERAL PURPOSE)	QQ-S-633	73-B-394
17	STEEL, CORROSION-RESISTING, BARS AND FORGINGS	QQ-S-763	73-B-396
18	STEEL, SHEETS AND STRIPS, GARBON AND ALLOY	57-136	73-B-393
19	WIRE, STEEL; (CARBON); SPRING, MUSIC	QQ-W-470	73-B-395
20	PAINT, VARNISH, LACQUER AND RELATED MATERIALS, METHODS OF, ETC.	TT-P-141	JAN-L-73
21	CEMENT, PETTMAN	JAN-C-99	73-B-390
22	TAGS, SHIPPING AND STOCK	UU-T-81	73-B-395
23	TETRYL	JAN-T-339	73-B-393
24	LACQUER ENAMEL, LUSTRELESS	JAN-L-73	73-B-395
25	VARNISH, PHENOL FORMALDEHYDE RESIN	3-167	73-B-392
26	GRAPHITE (FOR USE IN AMMUNITION)	JAN-G-155	73-B-393
27	COLOR CARD SUPPLEMENT	3-1	TT-P-141
28	BARIUM STEARATE	JAN-B-366	73-B-393
29	WIRE, PHOSPHOR BRONZE, SPRING	QQ-W-401	73-B-396
30	CALCIUM STEARATE	JAN-C-263	73-B-393

PHYSICAL PROPERTIES: Y.P. | T.S. | EL. 2 | RED. | BR. | ROCK.

* THE SPECIFICATION NUMBERS SHOWN ARE BASIC NUMBERS ONLY. WHEN A SPECIFICATION IS REVISED A LETTER IS AFFIXED TO ITS BASIC NUMBER. SPECIFICATIONS REFERRED TO IN THESE SPECIFICATIONS AND NOT LISTED HEREON, SHALL NOT APPLY.

(t) ALTERNATIVE MATERIALS ARE INTENDED TO BE USED ONLY WHEN PRESCRIBED MATERIALS ARE NOT AVAILABLE.

(a) ALTERNATIVE MATERIAL: STEEL, FSB1112, FS 1118 OR FS 1015 TO FS 1035, AS-COLD-FINISHED, SPEC QQ-S-633. (na)(t)

(b) ALTERNATIVE MATERIAL: ALUMINUM ALLOY, CONDITION "T" (AL-24) SPEC. QQ-A-354.(t)

(c) ALTERNATIVE MATERIAL(t) :-STEEL, MUSIC WIRE, COMP A, SPEC QQ-W-470 (na)(t)

(d) FOR PHYSICAL AND CHEMICAL PROPERTIES SEE DETAIL

(e) ALTERNATIVE MATERIAL: STEEL, FS1118 OR FS 1137, AS-COLD-FINISHED, SPEC. QQ-S-633 (na)(t)

(f) ALTERNATIVE MATERIAL: STEEL, FS 1022 OR FS 1118, AS-COLD-FINISHED, SPEC QQ-S-633.(t)

(g) ALTERNATIVE MATERIAL: STEEL, FS 1010 TO FS 1035, AS-COLD-FINISHED, SPEC QQ-S-633(t)

(h) ALTERNATIVE MATERIAL: STEEL, STRIP, WD1015 TO WD1035, COLD ROLLED, SPEC. 57-136 (t)

(k) MAY BE PLATED AFTER ASSEMBLY IN FIRING-PIN STRIKER ASSEMBLY.

(l) ALTERNATIVE MATERIAL :- STEEL, STRIP, WDX1020, COLD ROLLED, SPEC. 57-136.(t)

(m) ALTERNATIVE MATERIAL :- ALUMINUM SHEET, TYPE 1 OR 2, SPEC. QQ-A-561.(t)

(n) PROTECTIVE FINISHES :-

(na) TYPE I, CLASS TS, RS OR RSC, SPEC. 57-0-2.

(nb) TYPE I, CLASS TS, SPEC. 57-0-2.

(p) ALTERNATIVE MATERIAL :- ALUMINUM-ALLOY (AL-17) SPEC. QQ-A-353, (AL-24) SPEC. QQ-A-355, OR (AL-3) SPEC. QQ-A-359.

(q) ALTERNATIVE MATERIAL :- STEEL, FS1117, AS COLD-FINISHED, SPEC QQ-S-633(t)

(s) NOT REQUIRED WHEN SCREW, DRIVE (ALTERNATIVE), 73-B-395D IS USED.

FUZE, BOMB, NOSE, AN-M158. LIST OF PARTS & LIST OF SPECIFICATIONS

REVISIONS				
1	7-26-45			
2	9-6-45			
3	9-1-46			
4	8-8-50			

JULY 3, 1945

CLASS	DIVISION	DRAWING	FILE
73	8	390 A	

TOLERANCE ON DIMENSIONS NOT OTHERWISE SPECIFIED
DECIMAL ±
FRACTIONAL ±
ANGULAR ±

DRAFTSMAN C V | TRACER C V | ENGINEER

DRG. PERTAINS TO 73-B-390

CHECKER N.C. | ENGINEER

SUBMITTED: HEAD ENGINEER, ORD. DEPT. U. S. A.

EXAMINED: CHIEF, ORD. DEPT. U. S. A.

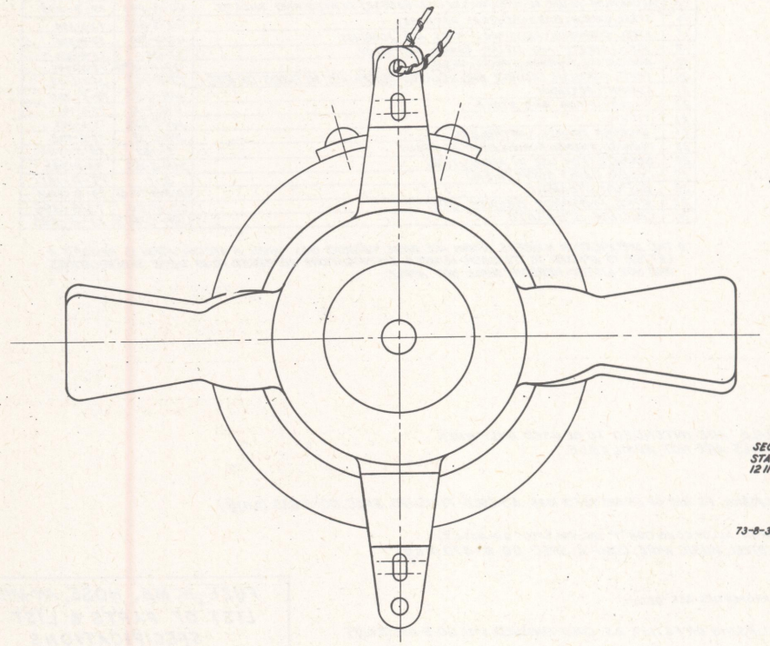
APPROVED BY ORDER OF THE CHIEF OF ORDNANCE: CHIEF, ORD. DEPT. U. S. A.

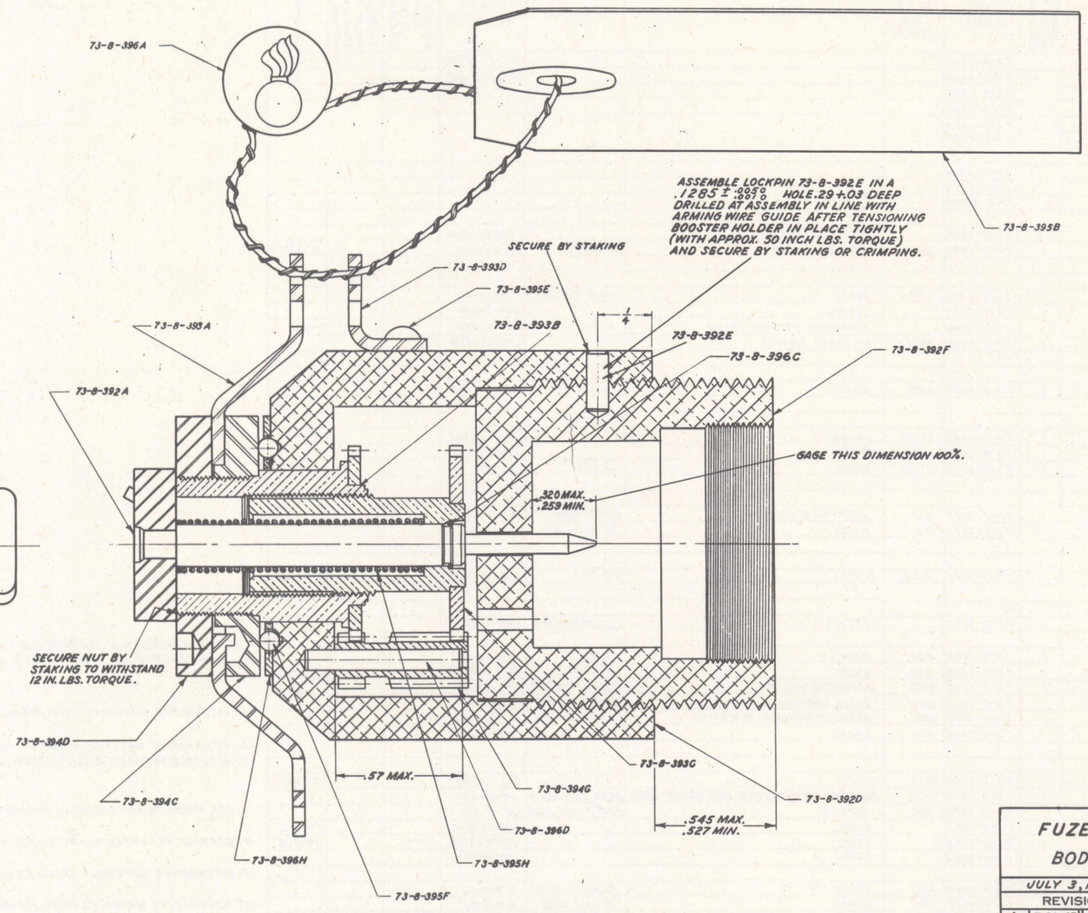
D

ORDNANCE DEPT., U. S. A.

HEAT TREATMENT AND FINAL FINISH

PHYSICAL PROPERTIES	
Y.P.	
T.S.	
EL. 2	
RED.	
BR.	
ROCK.	





BODY ASSEMBLY 73-B-391A 4

0 1 2 INCHES

FUZE, BOMB, NOSE, AN-M158.
BODY ASSEMBLY

JULY 3, 1945

REVISIONS			
1	7-26-45		
2	9-6-45		
3	9-1-46		"
4	8-8-50		

DRG. PERTAINS TO
73-B-390

CLASS	DIVISION	DRAWING	FILE
73	B	391	

TOLERANCE ON DIMENSIONS NOT OTHERWISE SPECIFIED
DECIMAL ±
FRACTIONAL ± 1/64
ANGULAR ±

D'FTSMAN	TRACER		ENGINEER
H.C.	H.C.	D.W.	
CHECKER			ENGINEER
C.V.	C.C.		

SUBMITTED:
H. W. Bowman
HEAD ENGINEER ORD. DEPT., U.S.A.

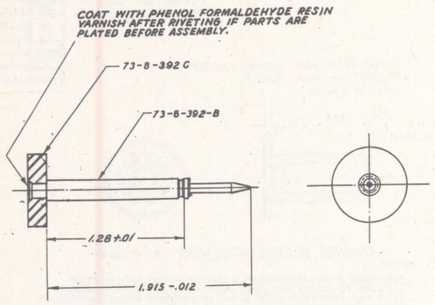
EXAMINED:
R. N. Bassett
COL. ORD. DEPT., U.S.A.

APPROVED BY ORDER OF THE CHIEF OF ORDNANCE:
J. C. Lake
COL. ORD. DEPT., U.S.A.

D

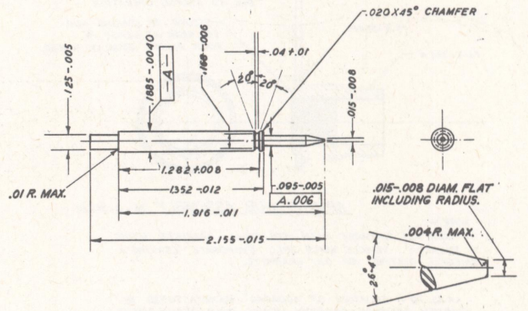
ORDNANCE DEPT., U.S.A.

HEAT TREATMENT AND FINAL FINISH



FIRING-PIN STRIKER ASSEMBLY 73-8-392 A2.

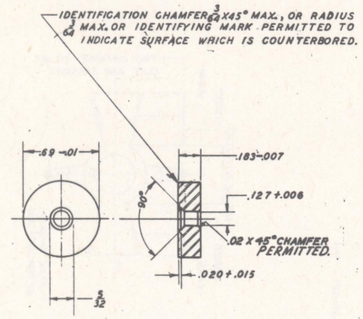
EACH ASSEMBLY SHALL WITHSTAND A PULL TEST OF 100 LBS. TO DETERMINE IF FIRING PIN IS SECURE IN STRIKER.



PIN, FIRING 73-8-392 B4

STEEL, FS 1117, AS-COLD-FINISHED

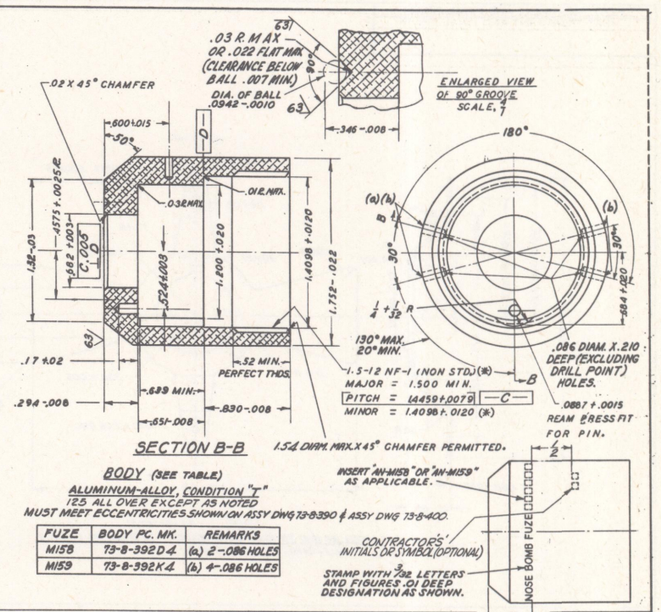
FINISH ALL OVER 125



STRIKER 73-8-392 C4

STEEL, FS 1117, AS-COLD-FINISHED

FINISH ALL OVER 125

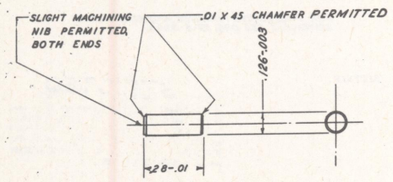


SECTION B-B

BODY (SEE TABLE)

ALUMINUM-ALLOY, CONDITION "T" 125 ALL OVER EXCEPT AS NOTED MUST MEET ECCENTRICITIES SHOWN ON ASSY DWG 73-8-390 & ASSY DWG 73-8-400.

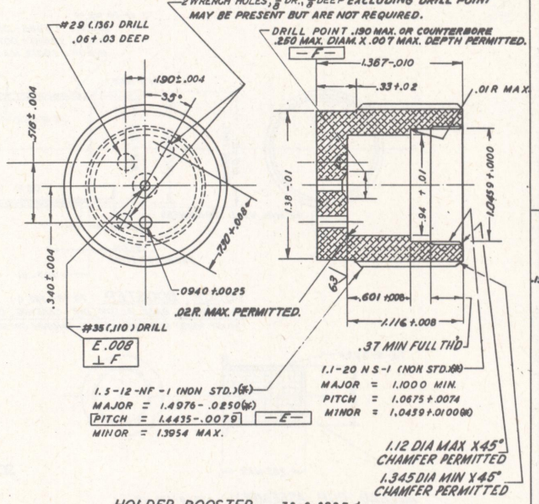
FUZE	BODY PC. MK.	REMARKS
M158	73-8-392 D4	(a) 2-.086 HOLES
M159	73-8-392 K4	(b) 4-.086 HOLES



PIN, LOCK 73-8-392 E4

ALUMINUM ALLOY, CONDITION "T"

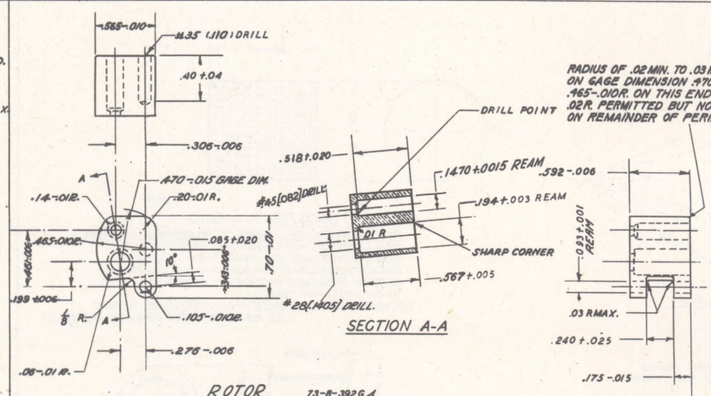
FINISH ALL OVER 125



HOLDER, BOOSTER 73-8-392 F4

ALUMINUM ALLOY, CONDITION "T"

125 ALL OVER EXCEPT AS NOTED MUST MEET ECCENTRICITIES SHOWN ON ASSY DWG 73-8-390 AND ASSY DWG 73-8-400.



SECTION A-A

ROTOR 73-8-392 G4.

COMMERCIAL BRASS, ROD, COMPOSITION "B" HALF-HARD

FINISH ALL OVER 125

FOR PROTECTIVE FINISHES AND ALTERNATIVE MATERIALS SEE DRG. 73-8-390A.

RADIUS OF .02 MIN. TO .03 MAX. REQUIRED ON GAGE DIMENSION .470 -.015 AND .465 -.010 R. ON THIS END OF BODY. .02 R. PERMITTED BUT NOT REQUIRED ON REMAINDER OF PERIPHERY.

SCALE 2/1, 4/1

FUZE, BOMB, NOSE, AN-M158 AND AN-M159, DETAILS

JULY 3, 1945

REVISIONS			
1	7-26-45		
2	9-6-45		
3	9-1-46		
4	8-8-50		

CLASS	DIVISION	DRAWING	FILE
73	8	392	

TOLERANCE ON DIMENSIONS NOT OTHERWISE SPECIFIED
DECIMAL ±
FRACTIONAL ±
ANGULAR ±

DRAFTSMAN G.V. TRACER G.K. ENGINEER

CHECKER H.C. ENGINEER

DRG. PERTAINS TO
73-8-390
73-8-391

SUBMITTED:
Head Engineer ORD. DEPT., U. S. A.

EXAMINED:
Col. ORD. DEPT., U. S. A.

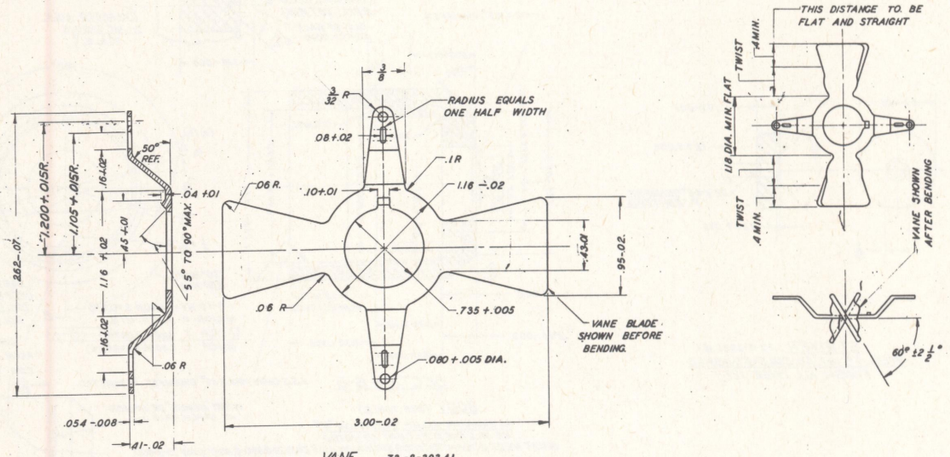
APPROVED BY ORDER OF THE CHIEF OF ORDNANCE:
Col. ORD. DEPT., U. S. A.

D

ORDNANCE DEPT., U. S. A.

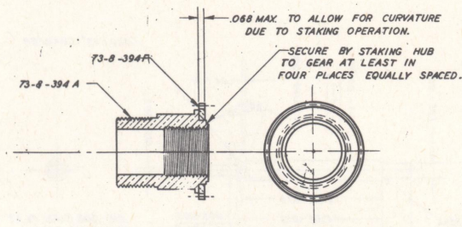
HEAT TREATMENT AND FINAL FINISH

PHYSICAL PROPERTIES	
Y.P.	
T.S.	
EL. 2	
RED.	
BR.	
ROCK.	



VANE 73-8-393 A1

STEEL, WD 1020 TO 1035, COLD ROLLED, TEMPER NO. 2 OR 3 HALF-HARD OR QUARTER-HARD



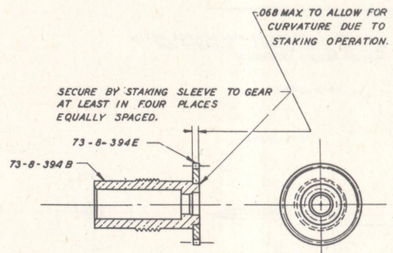
ARMING HUB ASSEMBLY 73-8-393 B1

NOTE:-
COAT ALL SURFACES WITH COLLOIDAL GRAPHITE USING A VOLATILE VEHICLE WHICH WILL EVAPORATE LEAVING A UNIFORM COATING OF DRY GRAPHITE.

(A 25 TO 1 SOLUTION OF "AQUADAG" MANUFACTURED BY ACHESON COLLOIDS COMPANY MEETS THIS REQUIREMENT.)

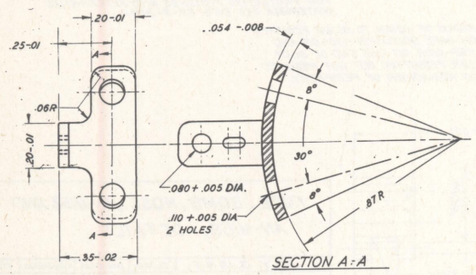
NOTE:-
ASSEMBLY SHALL WITHSTAND A 12 INCH POUND TORQUE LOAD TENDING TO CAUSE RELATIVE ROTATION BETWEEN STATIONARY GEAR AND ARMING HUB WITHOUT SHOWING VISUAL ANGULAR SEPARATION BETWEEN TWO LINES SCRATCHED ON END SURFACE OF HUB AND SURFACE OF GEAR.

NOTE:-
ARMING HUB ASSEMBLY 73-8-393 B AND ARMING SLEEVE ASSEMBLY 73-8-393 C SHALL OPERATE FREELY WITH PINION 73-8-394 G WHEN ASSEMBLED TO A FUNCTIONAL GAGE SIMULATING A BODY AND PINION PIN ASSEMBLY GIVING MINIMUM BACKLASH.

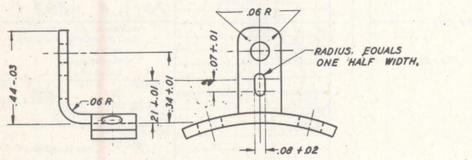


ARMING SLEEVE ASSEMBLY 73-8-393 C1

NOTE:-
ASSEMBLY SHALL WITHSTAND A 12 INCH POUND TORQUE LOAD TENDING TO CAUSE RELATIVE ROTATION BETWEEN MOVABLE GEAR AND ARMING SLEEVE WITHOUT SHOWING VISUAL ANGULAR SEPARATION BETWEEN TWO LINES SCRATCHED ON END SURFACE OF SLEEVE AND SURFACE OF GEAR.

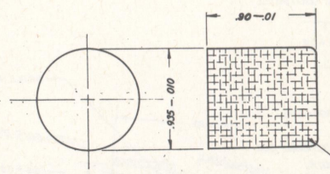


SECTION A:A



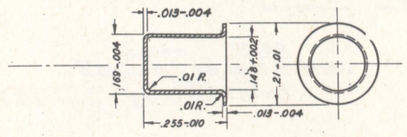
GUIDE, ARMING WIRE 73-8-393 D1

STEEL, WD 1010 TO 1035 COLD-ROLLED, TEMPER NO. 2 OR 3 HALF-HARD OR QUARTER-HARD



(a) PELLET, BOOSTER 73-8-393 E4

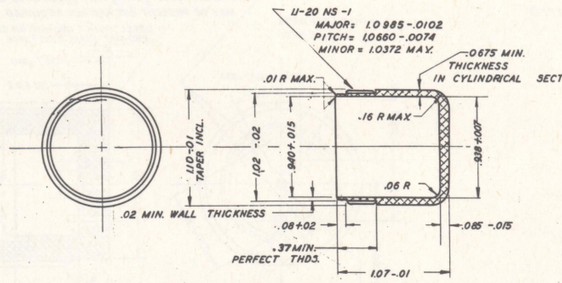
.245 -.15 GRAINS (.16-.1 GRAMS), TETRYL, GRADE I, CLASS a OR b SHALL CONTAIN NOT LESS THAN .25% GRAPHITE, GRADE I OR II, AND NOT MORE THAN .2% TOTAL BINDER-LUBRICANT CONSISTING OF GRAPHITE, BARIUM STEARATE AND/OR CALCIUM STEARATE IN ANY PROPORTION.
ADVISORY DATA:- PELLETING PRESSURE 10,000 LBS PSI. SPECIFIC GRAVITY 1.45 TO 1.60



(a) CUP, LEAD 73-8-393 F2

GILDING METAL

(a) THIS PART PERTAINS TO THE AN-M158 FUZE ONLY.

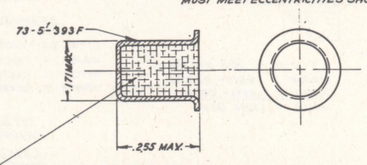


(a) CUP, BOOSTER 73-8-393 G

ALUMINUM BASE ALLOY, DIE CASTING, CLASS 5

MUST MEET ECCENTRICITIES SHOWN ON ASSY DWG 73-8-390

FOR PROTECTIVE FINISHES AND ALTERNATIVE MATERIALS SEE DRG. 73-8-390A.



(a) LEAD CUP ASSEMBLY 73-8-393 H2

SCALE 1/1, 2/1, 4/1, 6/1

CHARGE, LEAD CUP 73-8-393 K3

1.05 GRAINS (68 MILLIGRAMS) TETRYL
PRESS AT 10,000 LBS. PER SQ. INCH.
MAY CONTAIN NOT MORE THAN 2% GRAPHITE GRADE II.

FUZE, BOMB, NOSE, AN-M158 AND AN-M159, DETAILS

JULY 3, 1945

REVISIONS			
1	7-26-43		
2	9-6-45		
3	9-1-46		
4	8-8-50		

DRG. PERTAINS TO
73-8-390
73-8-391

CLASS	DIVISION	DRAWING	FILE
73	8	393	

TOLERANCE ON DIMENSIONS NOT OTHERWISE SPECIFIED
DECIMAL ±
FRACTIONAL ±
ANGULAR ±

D'FTSMAN	TRACER	ENGINEER
G V	E R	

CHECKER	ENGINEER
C.M.	

SUBMITTED:-
HEAD ENGINEER ORD. DEPT., U.S.A.

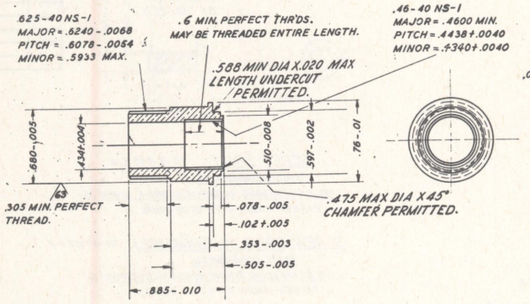
EXAMINED:-
CH. ORD. DEPT., U.S.A.

APPROVED BY ORDER OF THE CHIEF OF ORDNANCE:-
BRIG. GEN. CH. ORD. DEPT., U.S.A.

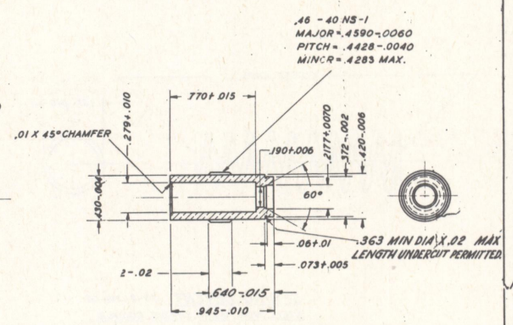
D

ORDNANCE DEPT., U.S.A.

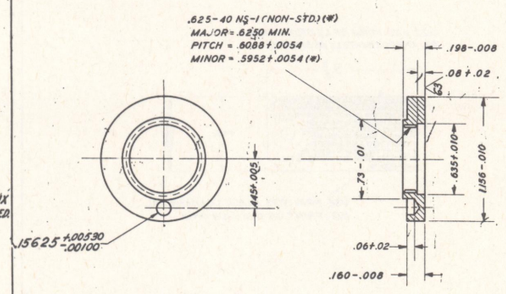
HEAT TREATMENT AND FINAL FINISH



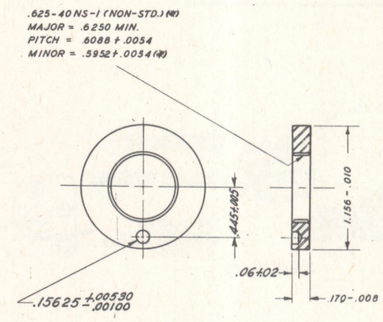
HUB, ARMING 73-8-394 A 4
COMMERCIAL BRASS, ROD, COMPOSITION "B"
HALF-HARD
125/ ALL OVER EXCEPT AS NOTED



SLEEVE, ARMING 73-8-394 B 4
COMMERCIAL BRASS, ROD, COMPOSITION "B"
HALF-HARD
FINISH ALL OVER 125/



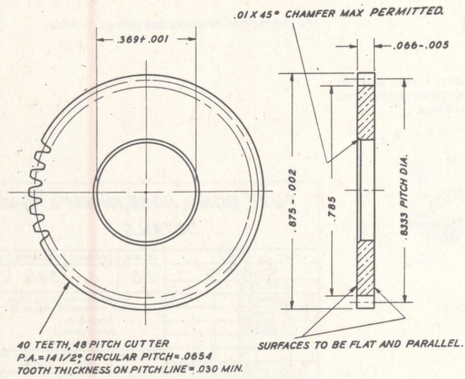
RACE, OUTER BALL 73-8-394 C 4
STEEL, FS 1117, AS-COLD-FINISHED
125/ ALL OVER EXCEPT AS NOTED



NUT 73-8-394 D 4
STEEL, FS 1117, AS-COLD-FINISHED
FINISH ALL OVER 125/

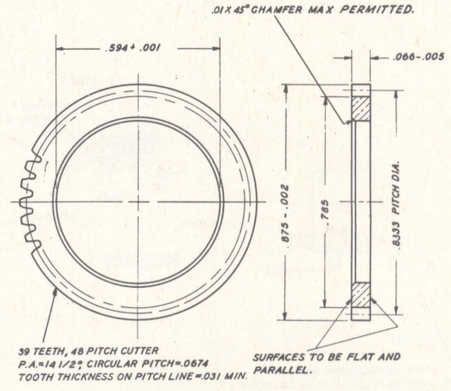
PHYSICAL PROPERTIES

Y.P.	
T.S.	
EL. 2	
RED.	
BR.	
ROCK.	



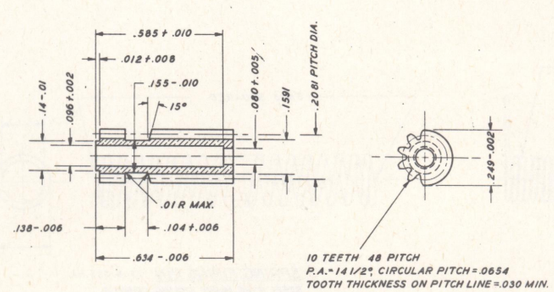
GEAR, MOVABLE 73-8-394 E 4
COMMERCIAL BRASS, STRIP
FINISH ALL OVER 125/

CHEMICAL PROPERTIES		MIN. PHYSICAL PROPERTIES	
COPPER	63.5% ± 2%	T.S.	73,000
LEAD	1.85% ±.5%	Y.P.	50,000
ZINC	REMAINDER	EL. IN 2. INCHES	7%



GEAR, STATIONARY 73-8-394 F 4
COMMERCIAL BRASS, STRIP
FINISH ALL OVER 125/

CHEMICAL PROPERTIES		MIN. PHYSICAL PROPERTIES	
COPPER	63.5% ± 2%	T.S.	73,000
LEAD	1.85% ±.5%	Y.P.	50,000
ZINC	REMAINDER	EL. IN 2 INCHES	7%



10 TEETH 48 PITCH
P.A. = 14 1/2° CIRCULAR PITCH = .0654
TOOTH THICKNESS ON PITCH LINE = .030 MIN.

PINION 73-8-394 G 4
COMMERCIAL BRASS, ROD, COMPOSITION "B"
HALF-HARD
FINISH ALL OVER 125/

NOTE:- COAT ALL SURFACES WITH COLLOIDAL GRAPHITE, USING A VOLATILE VEHICLE WHICH WILL EVAPORATE, LEAVING A UNIFORM COATING OF DRY GRAPHITE.

FOR PROTECTIVE FINISHES AND ALTERNATIVE MATERIALS SEE DRG. 73-8-390A.

SCALE = 2/1, 4/1, 5/1

FUZE, BOMB, NOSE, AN-M158 & AN-M159. DETAILS.

JULY 3, 1945

REVISIONS				
1	7-26-45			
2	9-6-45			
3	9-1-46			
4	8-8-50			

DRG. PERTAINS TO 73-8-391

CLASS	DIVISION	DRAWING	FILE
73	8	394	

TOLERANCE ON DIMENSIONS NOT OTHERWISE SPECIFIED
DECIMAL ±
FRACTIONAL ±
ANGULAR ±

D'FTSMAN N.C. TRACER N.C. ENGINEER
CHECKER C.V. ENGINEER

SUBMITTED:
HEAD ENGINEER ORD. DEPT. U.S.A.

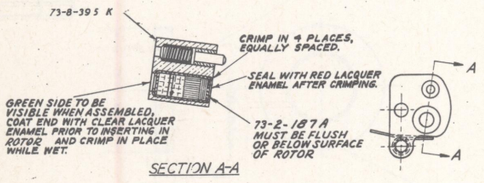
EXAMINED:
COL. ORD. DEPT. U.S.A.

APPROVED BY ORDER OF THE CHIEF OF ORDNANCE:
COL. ORD. DEPT. U.S.A.

D

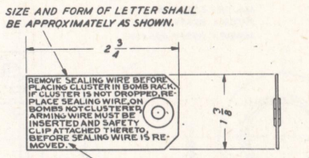
ORDNANCE DEPT., U.S.A.

HEAT TREATMENT AND FINAL FINISH



SECTION A-A

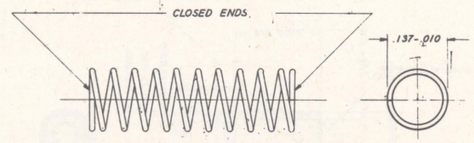
ROTOR LOADING ASSEMBLY 73-8-395 A4



TAG, SEAL 73-8-395 B2

MATERIAL MANILA PAPER TYPE B SIZE NO. 1

FIBER CONTENTS 15 JU, 15 WO OR 15 SU.



SPRING, DETENT 73-8-395 C2

STEEL, WIRE, MUSIC, SPRING, COMP. A

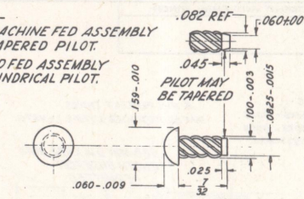
REQUIRED VALUES

A- SOLID HEIGHT = .130 MAX.
B- FREE HEIGHT = .400 ± .025
C- LOAD AT ASSEMBLY HEIGHT OF .25 INCHES = 2.8 OZ. ± .6 OZ.
D- LOAD APPLIES AFTER SEASONING, PLATING AND TREATMENT TO REMOVE EMBRITTLEMENT.
E- SEASON THOROUGHLY AFTER WINDING.
F- TREAT TO REMOVE EMBRITTLEMENT WITHIN 24 HRS. AFTER PLATING.

ADVISORY DATA

A- DIAMETER OF WIRE = .01
B- TOTAL NUMBER OF COILS = 10
C- NUMBER OF ACTIVE COILS = 8
D- SEASON BY HEATING TO 500°F. FOR AT LEAST 5 MINUTES.
E- TO REMOVE EMBRITTLEMENT, HEAT TO 300°F. FOR AT LEAST 30 MINUTES, AS SOON AFTER PLATING AS PRACTICABLE.

NOTE a:-
FOR MACHINE FED ASSEMBLY USE TAPERED PILOT.
FOR HAND FED ASSEMBLY USE CYLINDRICAL PILOT.



SCREW, DRIVE 73-8-395 E4

STEEL, COMMERCIAL

NO. 2 X 7/32 LONG, ROUND HEAD DRIVE SCREW (a)

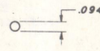
PARKER-KALON TYPE "U" OR EQUAL

SCREW, DRIVE (ALTERNATIVE) 73-8-395 D4

STEEL, COMMERCIAL

NO. 2 X 1/4 LONG, ROUND HEAD DRIVE SCREW. (a)

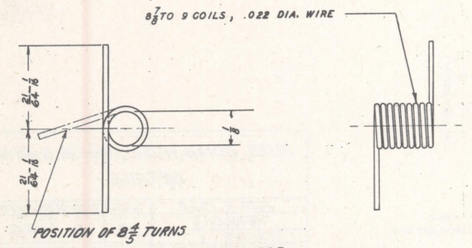
PARKER-KALON TYPE "U" OR EQUAL.



BALL 73-8-395 F

STAINLESS STEEL, COMMERCIAL

PHYSICAL PROPERTIES	
Y.P.	
T.S.	
EL. 2	
RED.	
BR.	
ROCK.	



SPRING, ROTOR 73-8-395 G4

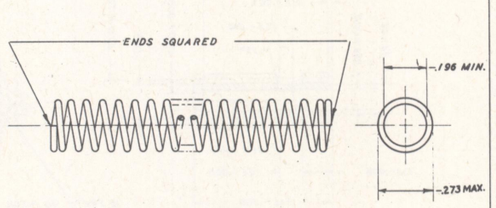
STEEL, WIRE, MUSIC, SPRING, COMP. A

REQUIRED VALUES

A- DIAMETER OF WIRE = .023 - .002
B- TOTAL NUMBER OF COILS = 9 - 1/2
C- SOLID HEIGHT = .235 MAX.
D- DIMENSIONS APPLY AFTER SEASONING, PLATING AND TREATMENT TO REMOVE EMBRITTLEMENT.
E- SEASON THOROUGHLY AFTER WINDING.
F- TREAT TO REMOVE EMBRITTLEMENT WITHIN 24 HRS. AFTER PLATING.

ADVISORY DATA

A- SEASON BY HEATING TO 500° F. FOR AT LEAST 5 MINUTES.
B- TO REMOVE EMBRITTLEMENT, HEAT TO 300° F. FOR AT LEAST 30 MINUTES, AS SOON AFTER PLATING AS PRACTICABLE.



SPRING, FIRING PIN 73-8-395 H2

STEEL, WIRE, MUSIC, SPRING, COMP. A

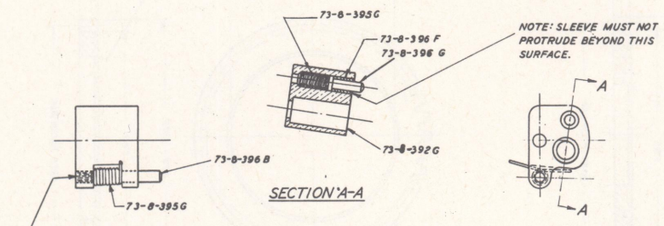
REQUIRED VALUES

A. SOLID HEIGHT = .800 MAX.
B. FREE HEIGHT = 1.70 ± .04
C. LOAD AT ASSEMBLY HEIGHT OF 1.18 INCHES = 2 LBS, 14 OZ. ± 7 OZ.
D. LOAD APPLIES AFTER SEASONING, PLATING AND TREATMENT TO REMOVE EMBRITTLEMENT.
E. SEASON THOROUGHLY AFTER WINDING.
F. TREAT TO REMOVE EMBRITTLEMENT WITHIN 24 HOURS AFTER PLATING.

ADVISORY DATA

A. DIA. OF WIRE = .032
B. TOTAL NUMBER OF COILS = 23
C. NUMBER OF ACTIVE COILS = 21
D. SEASON BY HEATING TO 500° F. FOR AT LEAST 10 MIN.
E. TO REMOVE EMBRITTLEMENT, HEAT TO 300° F. FOR AT LEAST 30 MIN., AS SOON AFTER PLATING AS PRACTICABLE.

FOR PROTECTIVE FINISHES SEE DRG. 73-8-390A.



SECTION A-A

ROTOR ASSEMBLY 73-8-395 K4

SCALE: 1, 2, 4, 5, 8

FUZE, BOMB, NOSE, AN-M158 & AN-M159. DETAILS

JULY 3, 1945	CLASS	DIVISION	DRAWING	FILE
	73	8	395	

REVISIONS			
1	7-26-45		
2	9-6-45		
3	9-1-46		
4	8-8-50		

TOLERANCE ON DIMENSIONS NOT OTHERWISE SPECIFIED
DECIMAL ±
FRACTIONAL ±
ANGULAR ±

D'FTSMAN	TRACER	ENGINEER
GY	WO	DBC

CHECKER	ENGINEER
C.V.	

DRG. PERTAINS TO
73-8-390

SUBMITTED:
J. H. Wolcman
HEAD ENGINEER ORD. DEPT., U.S.A.

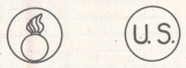
EXAMINED:
R. H. Barnett
COL. ORD. DEPT., U.S.A.

APPROVED BY ORDER OF THE CHIEF OF ORDNANCE:
J. G. Lukes
COL. ORD. DEPT., U.S.A.

D

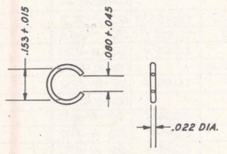
ORDNANCE DEPT., U.S.A.

HEAT TREATMENT AND FINAL FINISH

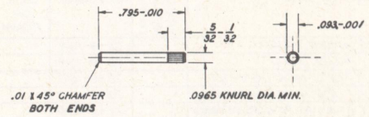


OBVERSE AND REVERSE OF CAR SEAL

SEAL, CAR 73-B-396A
COMMERCIAL LEAD.
.5 DIA. X .15 THICK (WITH NON-SLIP STEEL WIRE, ZINC-COATED, .056 DIA. X $\frac{1}{2}$ LONG).

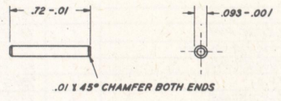


(b) RING, RETAINING 73-B-396C 4
WIRE, PHOSPHOR BRONZE, SPRING
ASTM B-159, ALLOY A, SPRING TEMPER



PIN, ROTOR 73-B-396B 4
STEEL, CORROSION RESISTING, BAR, CLASS 6, TYPE E
FINISH ALL OVER 125

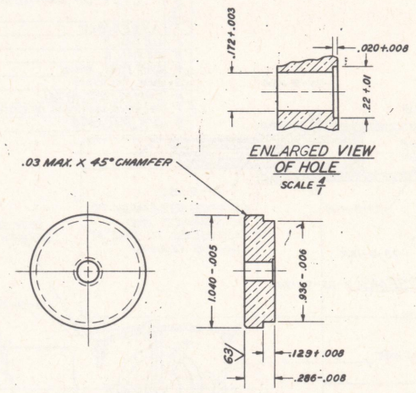
NOTE :-
(b) HEAT TREAT TO 325-350°F. FOR 2 HRS



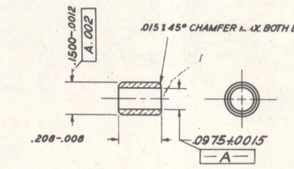
PIN, PINION 73-B-396D 4
STEEL, CORROSION RESISTING, BAR, CLASS 6, TYPE E
FINISH ALL OVER 125

PHYSICAL PROPERTIES

Y.P.	
T.S.	
EL. 2	
RED.	
BR.	
ROCK.	

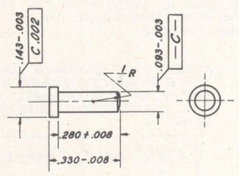


(a) DISC, LEAD CUP 73-B-396E 4
COMMERCIAL BRASS, BAR, COMPOSITION "B"
HALF-HARD
125 ALL OVER EXCEPT AS NOTED

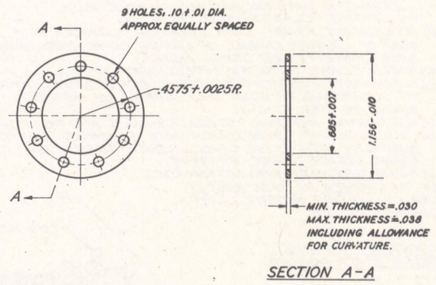


SLEEVE, DETENT 73-B-396F 4
COMMERCIAL BRASS, ROD, COMPOSITION "B"
HALF-HARD
FINISH ALL OVER 125

FOR PROTECTIVE FINISHES SEE DRG. 73-B-390A.

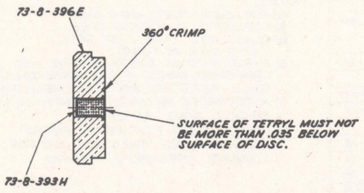


PIN, DETENT 73-B-396G 4
COMMERCIAL BRASS, ROD, COMPOSITION "B"
HALF-HARD
FINISH ALL OVER 125



SECTION A-A

CAGE, OUTER BALL 73-B-396H
COMMERCIAL BRASS, STRIP, COMPOSITION "C", "D", OR "E"
ROCKWELL HARDNESS B-65 MIN. REQUIRED



(a) LEAD CUP DISC ASSEMBLY 73-B-396K2

(a) THIS PART PERTAINS TO AN-M158 FUZE ONLY.

FUZE, BOMB, NOSE, AN-M158 AND AN-M159, DETAILS

JULY 3, 1945

REVISIONS	
1	7-26-45
2	9-6-45
3	9-1-46
4	8-8-50

CLASS	DIVISION	DRAWING	FILE
73	8	396	

TOLERANCE ON DIMENSIONS NOT OTHERWISE SPECIFIED
DECIMAL ±
FRACTIONAL ±
ANGULAR ±

D'FTSMAN DM | TRACER WO | ENGINEER PBL
CHECKER C.M. | ENGINEER

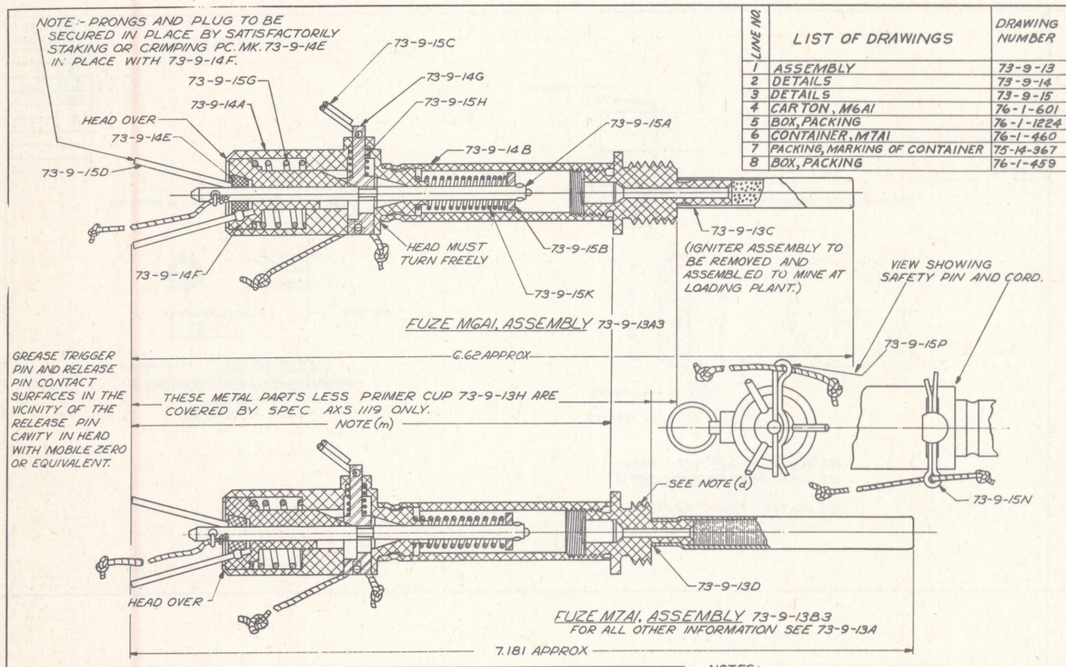
DRG. PERTAINS TO
73-B-390
73-B-391

SUBMITTED:
HEAD ENGINEER ORD. DEPT., U.S.A.
EXAMINED:
COL. ORD. DEPT., U.S.A.
APPROVED BY ORDER OF THE CHIEF OF ORDNANCE:
COL. ORD. DEPT., U.S.A.

SCALE 2/1, 4/1, 5/1

D

ORDNANCE DEPT., U.S.A.



LINE NO.	LIST OF DRAWINGS	DRAWING NUMBER
1	ASSEMBLY	73-9-13
2	DETAILS	73-9-14
3	DETAILS	73-9-15
4	CARTON, M6AI	76-1-601
5	BOX, PACKING	76-1-1224
6	CONTAINER, M7AI	76-1-460
7	PACKING, MARKING OF CONTAINER	75-14-367
8	BOX, PACKING	76-1-459

LIST OF PARTS

LINE NO.	NAME OF PART	NUMBER REQD PER COMPONENT	PIECE MARK	MATERIAL: SIZE OR FORM	MATERIAL: KIND	MATERIAL: GRADE	MATERIAL: SPEC NUMBER	APPROXIMATE UNIT WT. (POUNDS)	APPROX GROSS WT OF RAW STOCK PER 1000 ASSEMBLIES	REMARKS
1	ASSEMBLY, FUZE, MGAI		73-9-13A				(f)			(m)
2	ASSEMBLY, FUZE, M7AI		73-9-13B				(f)			(m)
3	ASSEMBLY, FUZE, MGAI IGNITER		73-9-13C							(a)
4	ASSEMBLY, FUZE, M7AI BLASTING CAP		73-9-13D							(b)
5	PIN, SAFETY, FIRING PIN, ASSEMBLY		73-9-15P							
6	BASE	1	73-9-14C	CASTING	ZINC BASE ALLOY; DIE CASTING	CLASS B	QQ-Z-363			(g)(h)(k)(q)
7	BASE	1	73-9-14D	CASTING	ZINC BASE ALLOY; DIE CASTING	CLASS B	QQ-Z-363			(g)(h)(k)(q)
8	CASE	1	73-9-14B	CASTING	ZINC BASE ALLOY, DIE CASTING	CLASS B	QQ-Z-363			(c)(h)(q)
9	CAP, BLASTING	1	73-9-13E		SPECIAL BLASTING CAP	TYPE I	49-20			(b)
10	CHARGE, IGNITER	1	73-9-13F		POWDER, BLACK	A-4 OR A-5	JAN-P-223			(a)
11	CORD	2	73-9-15M	NO.2	GLAZED CURTAIN FIXTURE CORD		COMMERCIAL			(n)
12	HEAD	1	73-9-14A	CASTING	ZINC BASE ALLOY, DIE CASTING	CLASS B	QQ-Z-363			(c)(h)(q)
13	PIN, FIRING	1	73-9-15A	ROD	STEEL, COLD ROLLED	FSX 1314 OR FS 1010-FS 1035	QQ-S-671			(c)(j)(k)
14	PIN, RELEASE	1	73-9-14G	ROD	STEEL, COLD ROLLED	FS X1314 OR FS 1010-FS 1035	QQ-S-671			(c)(j)(k)
15	PIN, SAFETY, RELEASE PIN	1	73-9-15F	WIRE	STEEL		COMMERCIAL			(c)(j)(i)
16	PIN, TRIGGER	1	73-9-14F	CASTING	ZINC BASE ALLOY; DIE CASTING	CLASS B	QQ-Z-363			(c)(j)(q)
17	PLUG	1	73-9-14E	CASTING	ZINC BASE ALLOY; DIE CASTING	CLASS B	QQ-Z-363			(c)(j)(q)
18	PRONG	3	73-9-15D	WIRE	STEEL, MUSIC SPRING	COMP A	QQ-W-470			(c)(j)
19	PRIMER, CUP	1	73-9-13H		NO.3 WESTERN BATTERY OR EQUAL		COMMERCIAL			
20	RING, RELEASE PIN	1	73-9-15C	WIRE	STEEL, MUSIC SPRING	COMP A	QQ-W-470			(c)(h)(j)
21	PIN, SAFETY, FIRING PIN	1	73-9-15L	WIRE	STEEL		COMMERCIAL			(c)(j)(i)
22	SPRING, FIRING PIN	1	73-9-15K	WIRE	STEEL, MUSIC SPRING	COMP A	QQ-W-470			(i)
23	SPRING, PULL	1	73-9-15H	WIRE	STEEL, MUSIC SPRING	COMP A	QQ-W-470			(i)
24	SPRING, PRESSURE	1	73-9-15G	WIRE	STEEL, MUSIC SPRING	COMP A	QQ-W-470			(i)
25	TUBE, CHARGE, IGNITING	1	73-9-13K	TUBE	PAPER, KRAFT	B	UU-P-268			(a)
26	WASHER	1	73-9-15B	STRIP	STEEL		COMMERCIAL			(i)
27	PIN, SAFETY, RELEASE PIN, ASSEMBLY		73-9-15N							
28					CEMENT, PETTMAN	TYPE I OR II	JAN-C-99			(a)
29					LACQUER ENAMEL, OLIVE DRAB	I	JAN-L-73			(e)
30					N R C COMPOUND	A	JAN-C-388			(d)
31					GLUE, CASEIN		C-G-456			(a)
32					GREASE, MOBILE ZERO OR EQUIVALENT		COMMERCIAL			
33					PAINT, ACID-PROOF, BLACK	TYPE I OR II	JAN-P-450			
34					LACQUER, CELLULOSE NITRATE	CLASS A	3-158			
35										

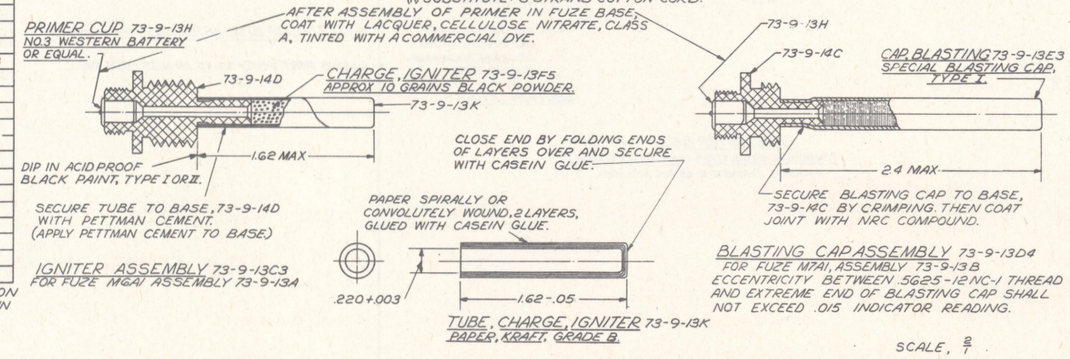
LIST OF SPECIFICATIONS

LINE NO.	LIST OF SPECIFICATIONS	SPEC NUMBER *	REQUIRED BY
1	AMMUNITION, EXCEPT SMALL ARMS AMM, GENERAL SPEC FOR	50-0-1	DWG 73-9-13
2			
3	CEMENT, PETTMAN	JAN-C-99	DWG 73-9-13
4	COMPOUND, SEALING N.R.C	JAN-C-388	DWG 73-9-13
5			
6	ENAMEL, LUSTRELESS, QUICK DRYING	JAN-E-74	DWG 73-9-13
7	FUZE, MINE, COMBINATION, MGAI, M7AI AND M10AI, METAL PARTS FOR	AXS-1119	DWG 73-9-13
8	FUZE, MINE, COMBINATION, MGAI, M7AI AND M10AI LOADING ASSEMBLY & PACKING	AXS-1118	DWG 73-9-13
9	GLUE, CASEIN	C-G-456	DWG 73-9-13
10	LACQUER ENAMEL, LUSTRELESS	JAN-L-73	DWG 73-9-13
11	LACQUER, CELLULOSE NITRATE, AND THINNER	3-158	DWG 73-9-13
12	METALS; GENERAL SPECIFICATION FOR INSPECTION OF	QQ-M-151	QQ-S-671
13	FINISHES, PROTECTIVE FOR IRON AND STEEL	57-0-2	DWG 73-9-13
14	PAINT, ACID-PROOF, BLACK (FOR AMMUNITION)	JAN-P-450	DWG 73-9-13
15	PAINTS AND RELATED MATERIALS, GENERAL SPEC FOR	3-1	JAN-L-73
16	PAPER, KRAFT	UU-P-268	DWG 73-9-13
17	POWDER, BLACK	JAN-P-223	DWG 73-9-13
18			
19	STEEL, CARBON AND ALLOY, BARS	QQ-S-671	DWG 73-9-15
20			
21	WIRE, STEEL (CARBON); SPRING, MUSIC	QQ-W-470	DWG 73-9-15
22			
23	CAPS, BLASTING, SPECIAL	49-20	DWG 73-9-13
24			
25	ZINC-BASE-ALLOY; DIE CASTINGS	QQ-Z-363	DWG 73-9-14
26	ALUMINUM-BASE-ALLOY DIE CASTING	QQ-A-591	DWG 73-9-14

* THE SPECIFICATION NUMBERS SHOWN ARE BASIC NUMBERS ONLY. WHEN A SPECIFICATION IS REVISED, A LETTER IS AFFIXED TO ITS BASIC NUMBER. SPECIFICATIONS REFERRED TO IN THESE SPECIFICATIONS AND NOT LISTED HEREON, SHALL NOT APPLY.

SUPERSEDES 73-9-13 WITHOUT CHANGE 11-15-48

NOTES:
- (a) FOR USE IN FUZE, MGAI ONLY.
- (b) FOR USE IN FUZE, M7AI ONLY.
- (c) CLASS RSC TYPE I OF SPEC 57-0-2 (OLIVE DRAB).
- (d) THREADS TO BE COATED WITH NRC COMPOUND, GRADE A AND ASSEMBLED WHILE WET. (FUZE, M7AI ASSEMBLY ONLY).
- (e) ALTERNATIVE MATERIAL:- ENAMEL, OLIVE DRAB, GRADE I, SPEC JAN-E-74.
- (f) SPEC AXS-1119 FOR METAL PARTS MANUFACTURER. SPEC AXS-1118 FOR LOADING ASSEMBLY & PACKING.
- (g) ALTERNATIVE MATERIAL:- ALUMINUM-BASE-ALLOY DIE CASTING - CLASS 5 - SPEC QQ-A-591.
- (h) ALTERNATIVE FINISH:- COAT EXTERIOR SURFACES WITH COAT OF LACQUER ENAMEL OR ENAMEL, OLIVE DRAB, GRADE I, SPEC JAN-E-74 (SEE DETAIL NOTES).
- (i) FINISH CLASS TS OR RS, TYPE I, SPEC 57-0-2.
- (j) ALTERNATIVE FINISH:- COMMERCIAL BLACK NICKEL, FINISH TO WITHSTAND 24 HOUR SALT SPRAY BY METHOD SHOWN IN SPEC 57-0-2.
- (k) ALTERNATIVE MATERIAL:- STEEL, FS X 1315 AND FS X 1335.
- (m) LOADING PLANT TO RETOUCH ANY DAMAGED COATED SURFACES WITH OLIVE DRAB LACQUER ENAMEL OR ENAMEL, GRADE I, SPEC JAN-E-74.
- (n) SUBSTITUTE:- 8 STRAND COTTON CORD.



IGNITER ASSEMBLY 73-9-13C3
FOR FUZE MGAI ASSEMBLY 73-9-13A

TUBE, CHARGE, IGNITER 73-9-13K
PAPER, KRAFT, GRADE B.

BLASTING CAP ASSEMBLY 73-9-13D4
FOR FUZE M7AI, ASSEMBLY 73-9-13B
ECCENTRICITY BETWEEN .5625-12 NC-1 THREAD AND EXTREME END OF BLASTING CAP SHALL NOT EXCEED .015 INDICATOR READING.

SCALE, 8/1

FUZE, MGAI IS USED WITH THE FOLLOWING:- MINE, ANTI-PERSONNEL, M2A4. FLARE, TRIP, M48.

NOTICE:- THIS DRAWING SHALL NOT BE USED NOR REPRODUCED EITHER WHOLLY OR IN PART EXCEPT WHEN AUTHORIZED IN CONNECTION WITH UNITED STATES GOVERNMENT PROCUREMENT.

FUZE, MINE, COMBINATION, MGAI AND M7AI, ASSEMBLY.

SEPTEMBER 21, 1943 | CLASS 73 | DIVISION 9 | DRAWING 13 | FILE

REVISIONS

4	8-15-45
5	11-15-48
6	12-8-49

TOLERANCE ON DIMENSIONS NOT OTHERWISE SPECIFIED
DECIMAL ±
FRACTIONAL ±
ANGULAR ±

DRG. PERTAINS TO

D'FTSMAN I.H.P | TRACER E.J.S | ENGINEER

CHECKER A.C.J. | ENGINEER

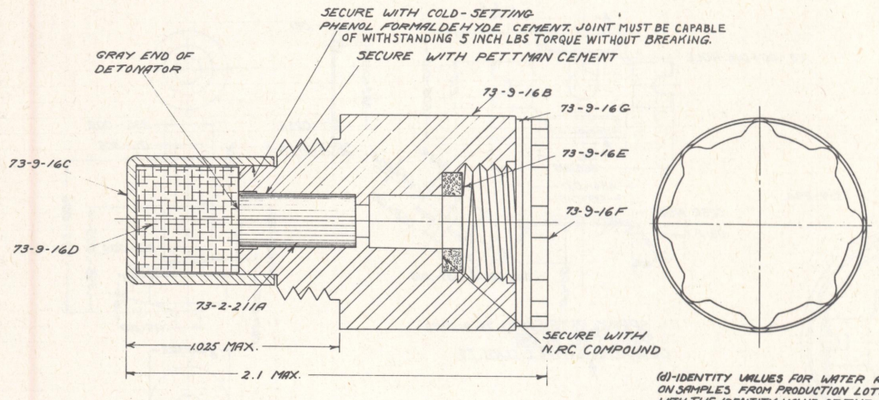
SUBMITTED:- SU' ORD. ENG. ORD. DEPT. U.S.A.

EXAMINED:- COL, ORD. DEPT., U.S.A.

APPROVED BY ORDER OF THE CHIEF OF ORDNANCE:- COL, ORD. DEPT., U.S.A.

D

ORDNANCE DEPT., U.S.A.



ASSEMBLY 73-9-16AB

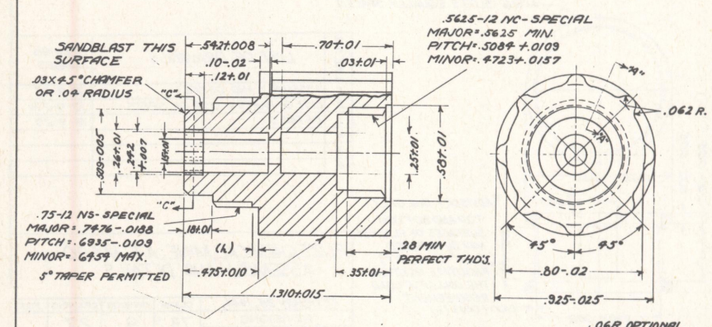
MAXIMUM ECCENTRICITY BETWEEN EXTERNAL BODY THREAD AND OUTSIDE SURFACE OF CUP .010

(d)-IDENTITY VALUES FOR WATER ABSORPTION ON SAMPLES FROM PRODUCTION LOTS SHALL AGREE WITH THE IDENTITY VALUE OF THE PILOT LOT WITHIN ± 2% MAX. WATER ABSORPTION SHALL NOT EXCEED 2.75%. WATER ABSORPTION VALUES SHALL BE DETERMINED IN ACCORDANCE WITH SPEC. AXS-698 REGARDLESS OF TYPE OF MATERIAL USED.

(f) ALTERNATIVE MATERIAL:- BARIUM STEARATE, SPEC JAN-B-366.

(g) ALTERNATIVE MATERIAL:- CALCIUM STEARATE, SPEC JAN-C-263.

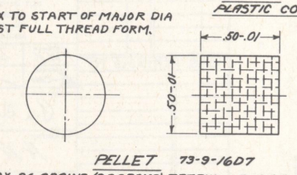
(h) ALTERNATIVE MATERIAL:- A MIXTURE OF GRAPHITE, GRADE I OR II, SPEC JAN-G-155 AND/OR BARIUM STEARATE, SPEC JAN-B-366 OR CALCIUM STEARATE, SPEC JAN-C-263, IN ANY PROPORTION.



BODY 73-9-16B9

PLASTIC COMPOUND

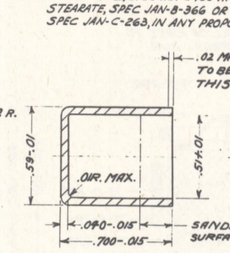
(k)- .078 MAX TO START OF MAJOR DIA OF FIRST FULL THREAD FORM.



PELLET 73-9-16D7

APPROX. 36 GRAINS (2.3 GRAMS), TETRYL, GRADE I, CLASS a

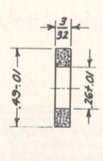
MAY CONTAIN NOT MORE THAN 2% GRAPHITE, GRADE I OR II SPECIFIC GRAVITY ALL PLACES 1.40 TO 1.55



CUP 73-9-16C7

PLASTIC COMPOUND(c)

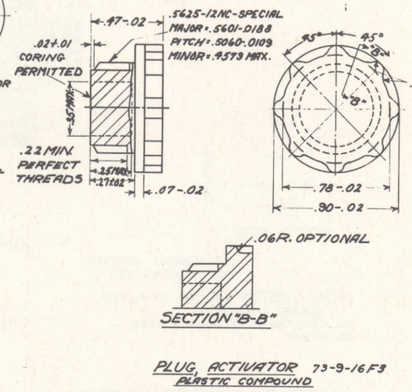
NOTE:- OVERALL LENGTH AND BOTTOM THICKNESS TOLERANCES INCLUDE VARIATIONS DUE TO CURVATURE OF BOTTOM



CUSHION 73-9-16E3

CORK-COMPOSITION, CLASS I.

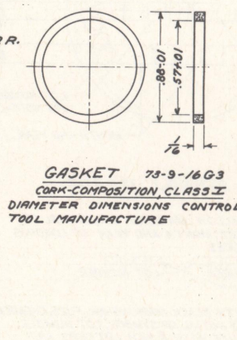
DIAMETER DIMENSIONS CONTROL TOOL MANUFACTURE.



PLUG, ACTIVATOR 73-9-16F3

PLASTIC COMPOUND

REMOVE ALL BURRS.



GASKET 73-9-16G3

CORK-COMPOSITION, CLASS I

DIAMETER DIMENSIONS CONTROL TOOL MANUFACTURE

SCALE, INCHES, 4/1, 3/1

LIST OF PARTS

LINE NO.	NAME OF PART	NUMBER REQ'D PER COMPONENT	PIECE-MARK	MATERIAL: SIZE OR FORM	MATERIAL: KIND	MATERIAL: GRADE	MATERIAL: SPEC. NUMBER	APPROXIMATE UNIT WEIGHT (GRAINS)	APPROX. GROSS WT. OF RAW STOCK PER 1000 ASSEMBLIES	REMARKS
1	ASSEMBLY		73-9-16A				AXS-1093			
2	DETONATOR ASSEMBLY, M31	1	73-2-211A							
3										
4	BODY	1	73-9-16B	MOLD	PLASTIC COMPOUND		AXS-698			(b)
5	CUP	1	73-9-16C	MOLD	PLASTIC COMPOUND		AXS-698			(d)(b)(c)
6	CUSHION	1	73-9-16E	SHEET	CORK-COMPOSITION	CLASS I	HH-C-576			
7	GASKET	1	73-9-16G	SHEET	CORK-COMPOSITION	CLASS I	HH-C-576			
8	PELLET	1	73-9-16D		TETRYL	I, CLASS a	JAN-T-339			
9	PLUG, ACTIVATOR	1	73-9-16F	MOLD	PLASTIC COMPOUND		AXS-698			(b)
10					GRAPHITE	I OR II	JAN-G-155			(f)(g)(h)
11					N.R.C. COMPOUND		JAN-C-388			
12					PETTMAN CEMENT		JAN-C-99			
13					PHENOL FORMALDEHYDE CEMENT		COMMERCIAL			(a)(b)
14										

(a) PHENOL FORMALDEHYDE CEMENT:-
DUREZ 7422 CATALYST, OR EQUAL ..... 15% ± .5% BY WEIGHT
DUREZ 12041 RESIN, OR EQUAL ..... 85% ± 1% BY WEIGHT
} MIX RESIN AND CATALYST THOROUGHLY TO FORM A SMOOTH HOMOGENEOUS SOLUTION. THE MIXED CEMENT SHOULD BE KEPT BELOW 90°F AND USED WITHIN 4 HOURS. (IF A SMOOTH HOMOGENEOUS SOLUTION IS NOT OBTAINED, THE MATERIAL SHOULD NOT BE USED)

(b) MUST NOT REACT WITH TETRYL.

(c) ALTERNATIVE MATERIAL:- PHENOLIC MATERIAL, MOLDED, CLASS I, SPEC. AXS-815.

LIST OF SPECIFICATIONS

LINE NO.	LIST OF SPECIFICATIONS	SPEC. NUMBER *	REQUIRED BY
1	AMMUNITION, EXCEPT SMALL ARMS AMM, GENERAL SPEC. FOR	50-0-1	DRG. 73-9-16
2	ACTIVATOR, M1 LOADING, ASSEMBLING, AND PACKING.	AXS-1093	DRG. 73-9-16
3	CEMENT, PETTMAN	JAN-C-99	DRG. 73-9-16
4	CORK-COMPOSITION, GASKET AND SHEET	HH-C-576	DRG. 73-9-16
5	PHENOLIC MATERIAL, MOLDED	AXS-815	DRG. 73-9-16
6	GRAPHITE (FOR USE IN AMMUNITION)	JAN-G-155	DRG. 73-9-16
7	COMPOUND, SEALING, N.R.C	JAN-C-388	DRG. 73-9-16
8	PLASTIC MOLDED PARTS FOR AMMUNITION	AXS-698	DRG. 73-9-16
9	PLASTICS, ORGANIC, GENERAL SPECIFICATION FOR	L-P-406	AXS-698
10	TETRYL	JAN-T-339	DRG. 73-9-16
11	BARIUM STEARATE	JAN-B-366	DRG 73-9-16
12	CALCIUM STEARATE	JAN-C-263	DRG 73-9-16

* THE SPECIFICATION NUMBERS SHOWN ARE BASIC NUMBERS ONLY. WHEN A SPECIFICATION IS REVISED A LETTER IS AFFIXED TO ITS BASIC NUMBER. SPECIFICATIONS REFERRED TO IN THESE SPECIFICATIONS AND NOT LISTED HEREON, SHALL NOT APPLY.

LIST OF DRAWINGS

LINE NO.	LIST OF DRAWINGS	DRAWING NUMBER
1	ASSEMBLY	73-9-16
2	DETONATOR ASSEMBLY	73-2-211
3		
4	METAL CONTAINER M1B2	76-7-721
5	PACKING & MARKING OF CONTAINER	76-1-1027
6		
7	PACKING BOX	76-1-941
8	PACKING & MARKING OF BOX	20-4-546
9		
10		

X-TRACING WAS REVISED DURING LIMITED PROCUREMENT

ACTIVATOR, M1
ASSEMBLY AND DETAILS.

SEPT. 25, 1943	CLASS	DIVISION	DRAWING	FILE
	73	9	16	

REVISIONS				
1	10-21-43	X6	3-9-44	X
2	11-10-43	7	5-1-44	X
3	1-11-44	8	8-15-45	X
4	2-12-44	9	6-5-47	X
5	2-24-44			X

TOLERANCE ON DIMENSIONS NOT OTHERWISE SPECIFIED
DECIMAL ±
FRACTIONAL ±
ANGULAR ±

DRAFTSMAN	TRACER	ENGINEER
E.H.F.	J.W.C.	M.T.
CHECKER: SAG		ENGINEER

DRG. PERTAINS TO: 82-0-83

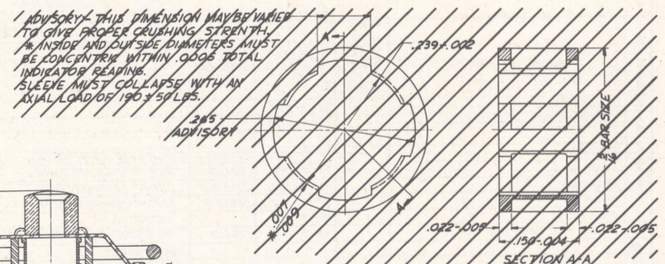
SUBMITTED:- Nilsen Crage, COL. ORD. DEPT. U.S.A.

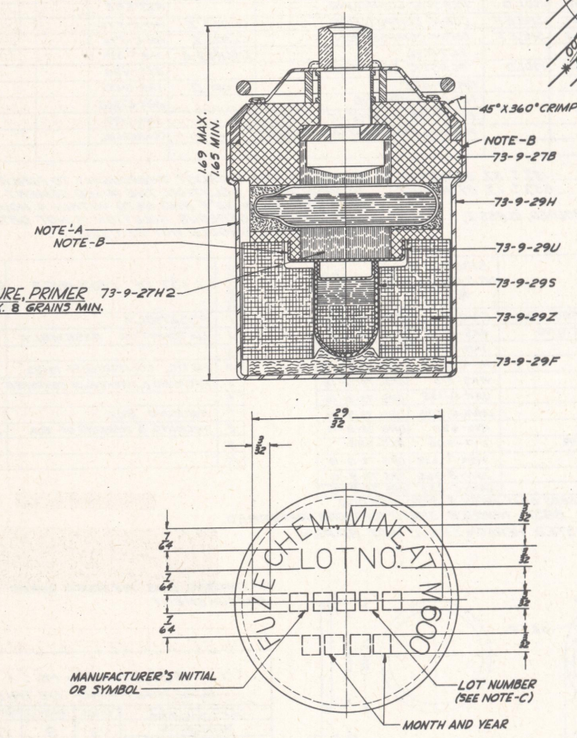
EXAMINED:- Col. ORD. DEPT. U.S.A.

APPROVED BY ORDER OF THE CHIEF OF ORDNANCE:- S.R. Stribling, COL. ORD. DEPT. U.S.A.

D

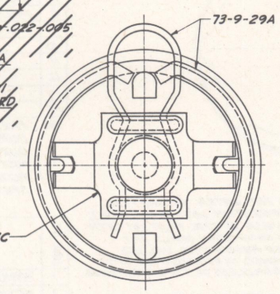
ORDNANCE DEPT., U.S.A.

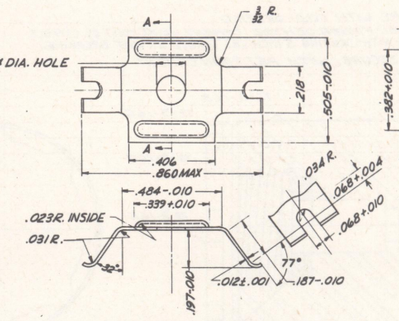




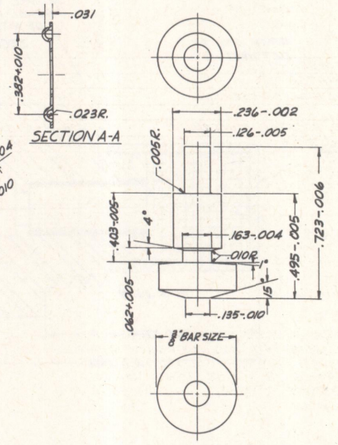
ASSEMBLY 73-9-27A2

NOTES:-
A- MARK HORIZONTALLY WITH YELLOW MARKING INK, INITIAL OR SYMBOL OF LOADER, LOT NUMBER, MONTH AND YEAR OF LOADING WITH 1/8 INCH LETTERS AND FIGURES.
SAMPLE MARKING:- □□ □□□□ □□□□
INITIAL OR SYMBOL OF MANUFACTURER
YEAR AND MONTH OF LOADING
LOT NUMBER
B- SEAL WITH N.R.C. COMPOUND.
C- MARK ON BOTTOM OF FUZE WITH BLACK MARKING INK, FUZE, CHEMICAL, MINE, A.T., M600, MANUFACTURER'S INITIAL OR SYMBOL, LOT NUMBER, MONTH AND YEAR OF MANUFACTURE, WITH 1/8 INCH LETTERS AND FIGURES.

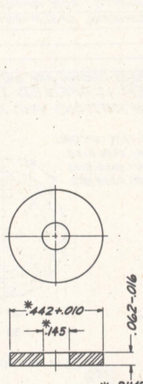




SPRING, RETRIEVING 73-9-27C2
SPRING STEEL WD1095
CADMIUM PLATE, TYPE I, CLASS TS
4/1

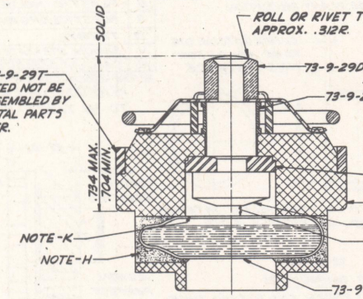


PISTON 73-9-27D2
BRASS, COMMERCIAL ROD, COMP "B" HALF-HARD
FINISH "f" 125
4/1

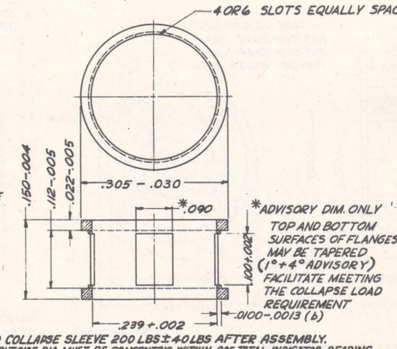


* DIMENSIONS CONTROL TOOL MANUFACTURE.

GASKET, PISTON BACKING 73-9-27E2
RUBBER, SYNTHETIC
OIL RESISTING, TYPE BUNA N GRADE
SB 515 ABF



AMPULE HOLDER ASSEMBLY 73-9-27B1
4/1



*ADVISORY DIM. ONLY
TOP AND BOTTOM SURFACES OF FLANGES MAY BE TAPERED (1° + 4° ADVISORY) FACILITATE MEETING THE COLLAPSE LOAD REQUIREMENT

NOTE:-(a)- LOAD TO COLLAPSE SLEEVE 200 LBS ± 40 LBS AFTER ASSEMBLY.
(b)- INSIDE & OUTSIDE DIA. MUST BE CONCENTRIC WITHIN .005 TOTAL INDICATOR READING.

SLEEVE 73-9-27F2
BRASS, COMMERCIAL, ROD, COMP "B" HALF HARD
(ROCKWELL B-70 OR HARDER, ADVISORY)
FINISH "f" 125
10/1

L- GAP BETWEEN CRUSHING END OF PISTON AND ADJACENT SURFACE OF AMPULE HOLE, WHEN DEAD WEIGHT LOAD OF 25 LBS. IS APPLIED AXIALLY TO OPPOSITE END OF PISTON, TO BE .030 MAX. TO .028 MIN.
H- CALCINED GYPSUM CEMENT + 5 % CONGO RED. QUANTITY OF CONGO RED MAY BE VARIED TO GIVE DISTINCT COLOR TO CEMENT.
K- GLASS AMPULE SHALL BE SEATED ON UPPER SURFACE OF HOLE IN AMPULE HOLDER.

[redacted]

CLASSIFICATION CHANGED TO UNCLASSIFIED
BY AUTHORITY OF O.C.M. NO. 24813
BY LT. COL., [signature] JUNE 5, 1945.

LINE NO.	LIST OF DRAWINGS	DRAWING NUMBER
1	ASSEMBLY AND DETAILS	73-9-27
2	LIST OF PARTS & LIST OF SPECS.	73-9-27A
3	DETAILS	73-9-29
4		
5		
6		

FUZE, CHEMICAL, MINE, A.T., M600 ASSEMBLY AND DETAILS

FEBRUARY 28, 1944

REVISIONS			
1	8-24-44		
2	6-5-45		

CLASS	DIVISION	DRAWING	FILE
73	9	27	

TOLERANCE ON DIMENSIONS NOT OTHERWISE SPECIFIED
DECIMAL ±
FRACTIONAL ±
ANGULAR ±

D'MAN F.W.A. | TRACER G.M. | ORDNANCE ENGINEER [illegible]
CHECKER [illegible] CAPT. | G.O. | PRINCIPAL ENGINEER [illegible]

DRG. PERTAINS TO

SUBMITTED: P. L. Christensen, MAJOR, ORD. DEPT., U.S.A.
EXAMINED: W. W. Holler, COL., ORD. DEPT., U.S.A.
APPROVED BY ORDER OF THE CHIEF OF ORDNANCE: [signature], COL., ORD. DEPT., U.S.A.

D

ORDNANCE DEPT., U.S.A.

LIST OF PARTS

LINE NO.	NAME OF PART	NUMBER REQUIRED PER COMPONENT	PIECE-MARK	MATERIAL: SIZE OR FORM	MATERIAL: KIND	MATERIAL: GRADE	MATERIAL: SPEC. NO.	APPROXIMATE UNIT WEIGHT (POUNDS)	APPROXIMATE GROSS WEIGHT PER STOCK PER ROD ASSEMBLIES		REMARKS
1	ASSEMBLY		73-10-29A					.57			(b)
2	DETONATOR	1	73-2-185A				50-78-7.	10. GRAINS			
3	METAL PARTS ASSEMBLY	1	73-10-30A					.55			(b)
4											
5	COVER, BOOSTER CONTAINER	1	73-10-29B	SHEET	ONIONSKIN		JAN-P-157				
6	CUP, BOOSTER	1	82-5-24G	ROD	ALUMINUM-ALLOY	COND T	QQ-A-351	102 GRAINS			(a) (d)
7	CUSHION	1	73-1-175G	SHEET	COMPRESSED CORK		COMMERCIAL	26 GRAINS			
8	DISC, DETONATOR HOLDER RETAINING	1	82-5-24E	SHEET	ALUMINUM	HALF-HARD	QQ-A-561	45 GRAINS			
9	PELLET, BOOSTER	1	73-1-174C		TETRYL		50-13-4	2855 GRAINS			
10											
11											
12											
13											
14											
15											

LIST OF DRAWINGS

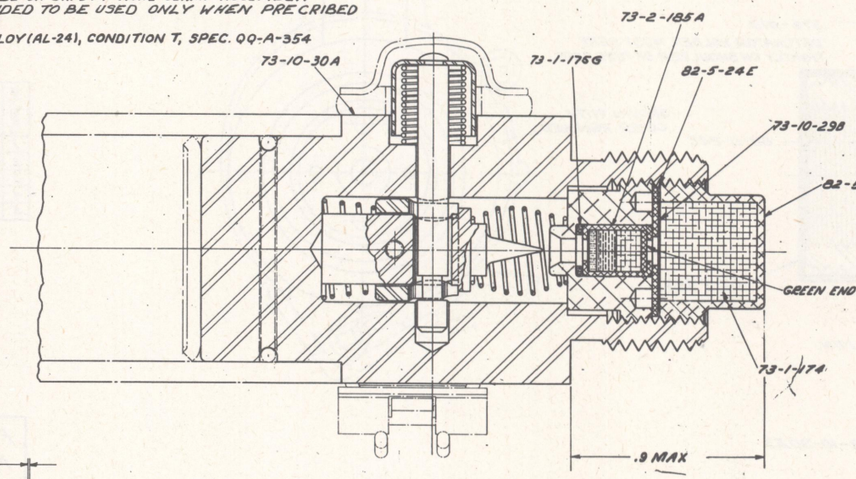
LINE NO.	LIST OF DRAWINGS	DRAWING NUMBER
1	ASSEMBLY	73-10-29
2	METAL PARTS ASSEMBLY	73-10-30
3	DETONATOR ASSEMBLY, M18	73-2-185
4	DETAILS	73-1-174
5	DETAILS	73-1-175
6	DETAILS	73-10-31
7	DETAILS	82-5-24
8		

LIST OF SPECIFICATIONS AND STANDARDS

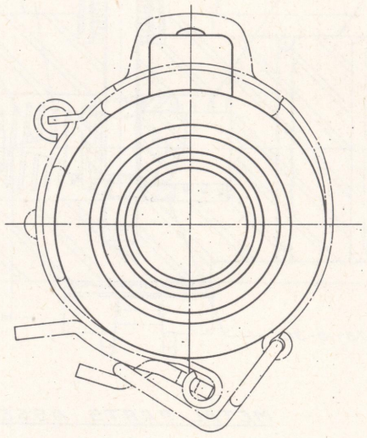
LINE NO.	LIST OF SPECIFICATIONS AND STANDARDS	SPEC. OR STD. NO. *	REQUIRED BY
1	AMMUNITION, EXCEPT SMALL ARMS AMM., GENERAL SPEC. FOR	50-0-1	DRG 73-10-29
2	ALUMINUM (AL-2); PLATE AND SHEET	QQ-A-561	DRG 82-5-24
3	ALUMINUM-BASE-ALLOY; DIE CASTINGS	AXS-679	DRG 82-5-24
4	BRASS, COMMERCIAL, BARS, RODS, SHAPES, SHEETS AND STRIPS	QQ-B-611	DRG 82-5-24
5	ALUMINUM-ALLOY (AL-24) (ALUMINUM-COPPER-MAGNESIUM (1.50%) ETC.	QQ-A-354	DRG 82-5-24
6	ALUMINUM-ALLOY (AL-17) (ALUMINUM-COPPER-MANGANESE); BARS, ETC	QQ-A-351	DRG 82-5-24
7			
8	METALS, GENERAL SPECIFICATION FOR INSPECTION OF	QQ-M-151	QQ-A-561
9	PAPER, GENERAL SPECIFICATIONS	UU-P-31	JAN-P-157
10	PAPER, ONIONSKIN (FOR USE IN AMMUNITION)	JAN-P-157	DRG 73-10-29
11	TETRYL	50-13-4	DRG 73-1-174
12	STANDARD FOR DIMENSIONING AND TOLERANCING	30-1-7	DRG 82-5-24

* THE SPECIFICATION AND STANDARD NUMBERS SHOWN ARE BASIC NUMBERS ONLY. WHEN REVISED, A LETTER IS AFFIXED TO ITS BASIC NUMBER. SPECIFICATIONS REFERRED TO IN THESE SPECIFICATIONS AND NOT LISTED HEREON, SHALL NOT APPLY.

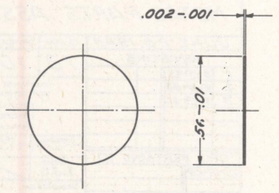
(a) ALTERNATIVE MATERIAL:- ALUMINUM-BASE-ALLOY, DIE-CASTING, CLASS 5, SPEC. AXS-679. (c)
(b) WEIGHT DOES NOT INCLUDE MOTOR TUBE OR SAFETY WIRE CLAMP ASSEMBLY.
(c) ALTERNATIVE MATERIALS ARE INTENDED TO BE USED ONLY WHEN PRESCRIBED MATERIALS ARE NOT AVAILABLE
(d) ALTERNATIVE MATERIAL: ALUMINUM-ALLOY (AL-24), CONDITION T, SPEC. QQ-A-354



ASSEMBLY 73-10-29A3



[redacted]



COVER, BOOSTER CONTAINER 73-10-29B1
ONIONSKIN PAPER
DIAMETER DIMENSION CONTROLS TOOL MANUFACTURE.

CLASSIFICATION CHANGED TO UNCLASSIFIED
BY AUTHORITY OF ODO NO. 31-46,
BY [redacted] DATE AUG 20, 1948.

0 1 2 INCHES

FUZE, ROCKET, B D, M401 ASSEMBLY AND DETAILS.

JUNE 28, 1945

REVISIONS	
1	8-20-46
2	3-17-50
3	8-29-50

CLASS	DIVISION	DRAWING	FILE
73	10	29	

TOLERANCE ON DIMENSIONS NOT OTHERWISE SPECIFIED
DECIMAL ±
FRACTIONAL ±
ANGULAR ±

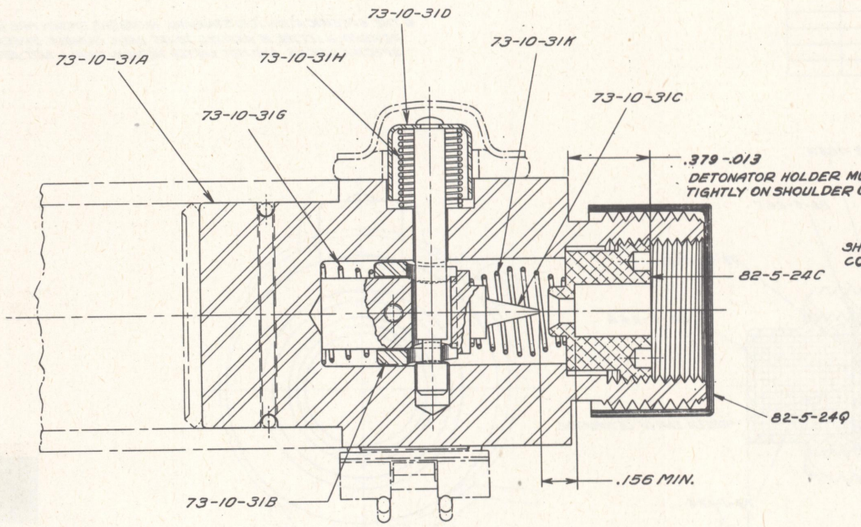
D'TSMAN TMR | TRACER M.W. | ENGINEER
CHECKER E.J.S. | O.C. | HEAD ENGINEER

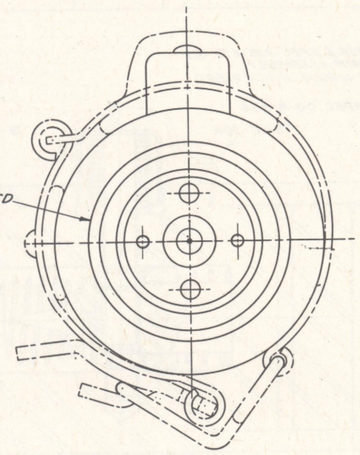
DRG. PERTAINS TO 82-5-22

SUBMITTED: A.M. Gallagher, LT. COL., ORD. DEPT. U.S.A.
EXAMINED: Emil Gatchell, LT. COL., ORD. DEPT. U.S.A.
APPROVED BY ORDER OF THE CHIEF OF ORDNANCE: C.S. Reed by a.d., COL., ORD. DEPT. U.S.A.

D

ORDNANCE DEPT. U.S.A.





LINE NO	LIST OF DRAWINGS	DRAWING NUMBER
1	METAL PARTS ASSEMBLY	73-10-30
2	LIST OF PARTS AND LIST OF SPECS	73-10-30A
3	DETAILS	73-10-31
4	DETAILS	82-5-24
5		

[redacted]

METAL PARTS ASSEMBLY 73-10-30A3

NOTE:-
1. PERMISSIBLE ECCENTRICITY, IN ASSEMBLY, BETWEEN FIRING PIN POINT AND CENTER LINE OF STAB HOLE OF HOLDER, DETONATOR, 82-5-24C, $\frac{1}{32}$ INCH.

CLASSIFICATION CHANGED TO UNCLASSIFIED.
BY AUTHORITY OF ODO NO. 31-98,
BY M Thompson DATE AUG 20, 1998.

0 1 2 INCHES

FUZE, ROCKET, B.D, M401.
METAL PARTS ASSEMBLY.

JUNE 28, 1945	CLASS	DIVISION	DRAWING	FILE
REVISIONS	73	10	30	
1 8-15-45				
2 8-20-46				
3 8-29-50				

TOLERANCE ON DIMENSIONS NOT OTHERWISE SPECIFIED
DECIMAL ±
FRACTIONAL ±
ANGULAR ±

D'FTSMAN T.W.R. TRACER T.W.R. ENGINEER
CHECKER E.J.S. HEAD ENGINEER

DRG. PERTAINS TO 73-10-29

SUBMITTED:
A.M. Gallagher
LT. COL., ORD. DEPT., U.S.A.

EXAMINED:
Earle Gatchell
LT. COL., ORD. DEPT., U.S.A.

APPROVED BY ORDER OF THE CHIEF OF ORDNANCE:
C.S. Reed by A.A.
COL., ORD. DEPT., U.S.A.

D

ORDNANCE DEPT., U.S.A.

LIST OF PARTS

LINE NO.	NAME OF PART	NUMBER REQ'D PER COMPONENT	PIECE-MARK	MATERIAL: SIZE OR FORM	MATERIAL: KIND	MATERIAL: GRADE	MATERIAL: SPEC. NO.	APPROXIMATE UNIT WEIGHT (POUNDS)	APPROX. GRAMS WT. OF ARM. STOCK PER ASSEMBLIES		REMARKS
1	METAL PARTS ASSEMBLY		73-10-30A					.55			
2	ARMING PIN ASSEMBLY		73-10-31D					.01			
3											
4	COVER	1	82-5-24Q	SHEET	BOXBOARD		50-11-79				
5	BODY	1	73-10-31A	BAR	STEEL, AS-COLD-FINISHED	FS1117, FS1118	QQ-S-633	.48			
6	HOLDER, DETONATOR	1	82-5-24C	ROD	ALUMINUM-ALLOY	COND T	QQ-A-351	.01			(c)
7	CUP, ARMING PIN	1	73-10-31F	STRIP	STEEL, COLD-ROLLED	NO.1010 TO NO.1020	57-136				(a)
8	PIN, ARMING	1	73-10-31E	BAR	STEEL, AS-COLD-FINISHED	FS1035 TO FS1060	QQ-S-633				(a)
9	PIN, FIRING	1	73-10-31C	BAR	STEEL, AS-COLD-FINISHED	FS1117 OR FS1118	QQ-S-633	.02			(a)
10											
11	SLIDER	1	73-10-31B	TUBING	STEEL, TUBING, TYPE I OR III, COLD-DRAWN	NO.1015 OR NO.1020	57-180	.01			(a)(b)
12	SPRING, ARMING PIN	1	73-10-31H	WIRE	STEEL WIRE, MUSIC SPRING	COMP. "A"	QQ-W-470	7.6 GRAINS			(a)
13	SPRING, FIRING PIN	1	73-10-31K	WIRE	STEEL WIRE, MUSIC SPRING	COMP. "A"	QQ-W-470	2.7 GRAINS			(a)
14	SPRING, SLIDER	1	73-10-31G	WIRE	STEEL WIRE, MUSIC SPRING	COMP. "A"	QQ-W-470	3.2 GRAINS			(a)
15											
16											
17											
18					LACQUER, ETHYL CELLULOSE, SPECIAL		3-198				
19											
20											

(a)- PROTECTIVE FINISH:- TYPE I, CLASS TS, RS OR RSC, SPEC 57-0-2.
(b)- ALTERNATIVE MATERIAL: STEEL, BAR, FS1117, FS1118 ; AS - COLD-FINISHED, SPEC. QQ-S-633
(c)- ALTERNATIVE MATERIAL :- (d) ALUMINUM-ALLOY (AL-24), CONDITION T, SPEC QQ-A-354.
"d)- ALTERNATIVE MATERIALS ARE INTENDED TO BE USED ONLY WHEN PRESCRIBED MATERIALS ARE NOT AVAILABLE.

LINE NO.	LIST OF SPECIFICATIONS AND STANDARDS	SPEC OR STD. NO. *	REQUIRED BY
1	AMMUNITION, EXCEPT SMALL ARMS AMM. GEN. SPEC. FOR	50-0-1	DWG. 73-10-30
2	ALUMINUM-ALLOY (AL-17) (ALUMINUM-COPPER-MAGNESIUM-ETC)	QQ-A-351	DWG. 82-5-24
3	BOXBOARD. FOR USE IN AMMUNITION	50-11-79	DWG. 82-5-24
4	FINISHES, PROTECTIVE, FOR IRON AND STEEL PARTS	57-0-2	DWG. 73-10-31
5	ALUMINUM-ALLOY (AL-24) (ALUMINUM-COPPER-MAGNESIUM (1.50%)-ETC)	QQ-A-354	DWG. 82-5-24
6			
7	LACQUER, ETHYL CELLULOSE, SPECIAL	3-198	DWG. 73-10-31
8			
9	METALS; GENERAL SPECIFICATION FOR INSPECTION OF	QQ-M-151	57-136
10	PAINT, VARNISH, LACQUER AND RELATED MATERIALS METHODS, ETC	TT-P-141	3-198
11	COLOR CARD SUPPLEMENT	3-1	TT-P-141
12			
13	STEEL, CARBON; BARS (GENERAL PURPOSE)	QQ-S-633	DWG. 73-10-31
14			
15	STEEL, CARBON AND ALLOY, SHEETS AND STRIPS	57-136	DWG. 73-10-31
16	WIRE, STEEL (CARBON); SPRING, MUSIC	QQ-W-470	DWG. 73-10-31
17			
18	TUBING, ROUND, MECH. AND STRUCT, STEEL, CARBON AND ALLOY ETC.	57-180	DWG. 73-10-31
19			
20			
21			
22	ORDNANCE FINISHES (SURFACE ROUGHNESS)	ORAX 6	DWG. 82-5-24
23	STANDARD FOR DIMENSIONING AND TOLERANCING	30-1-7	DWG. 82-5-24
24	SURFACE ROUGHNESS, WAVINESS AND LAY	MIL-STD-10	DWG. 82-5-24

* THE SPECIFICATION AND STANDARD NUMBERS SHOWN ARE BASIC NUMBERS ONLY. WHEN REVISED A LETTER IS AFFIXED TO THE BASIC NUMBER. SPECIFICATIONS REFERRED TO IN THE SPECIFICATIONS AND NOT LISTED HEREON, SHALL NOT APPLY.

CLASSIFICATION CHANGED TO UNCLASSIFIED.
BY AUTHORITY OF ODO NO. 31-96,
BY M. Hamilton DATE AUG 22, 1948

[redacted]

FUZE, ROCKET, BD, M401: LIST OF PARTS AND LIST OF SPECIFICATIONS FOR METAL PARTS ASSEMBLY.

JUNE 28, 1945

REVISIONS

1	8-15-45		
2	8-20-48		
9	8-29-50		

DRG. PERTAINS TO
73-10-30

CLASS	DIVISION	DRAWING	FILE
73	10	30A	

TOLERANCE ON DIMENSIONS NOT OTHERWISE SPECIFIED
DECIMAL ±
FRACTIONAL ±
ANGULAR ±

DFTSMAN RNO | TRACER RNO | ENGINEER
CHECKER E.V.S. | HEAD ENGINEER

SUBMITTED:- A.M. Gallagher Asst. LT. COL., ORD. DEPT. U.S.A.

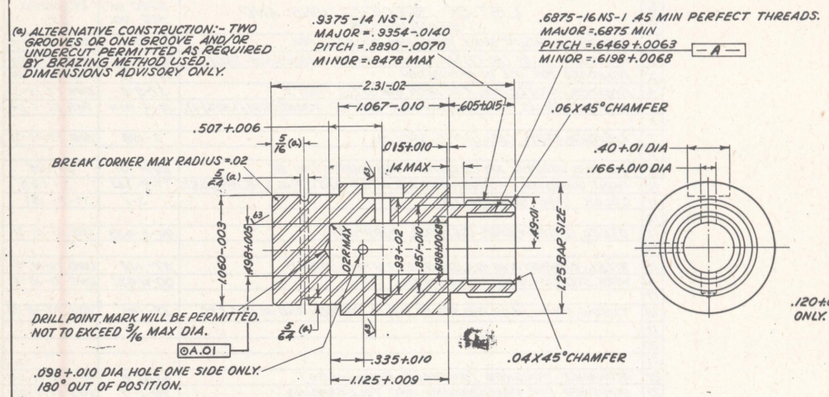
EXAMINED:- Earle Gaither LT. COL., ORD. DEPT. U.S.A.

APPROVED BY ORDER OF THE CHIEF OF ORDNANCE:- C.S. Reed by a.a. COL., ORD. DEPT. U.S.A.

D

ORDNANCE DEPT., U.S.A.

(a) ALTERNATIVE CONSTRUCTION:- TWO GROOVES OR ONE GROOVE AND/OR UNDERCUT PERMITTED AS REQUIRED BY BRAZING METHOD USED. DIMENSIONS ADVISORY ONLY.



BODY 73-10-31A2

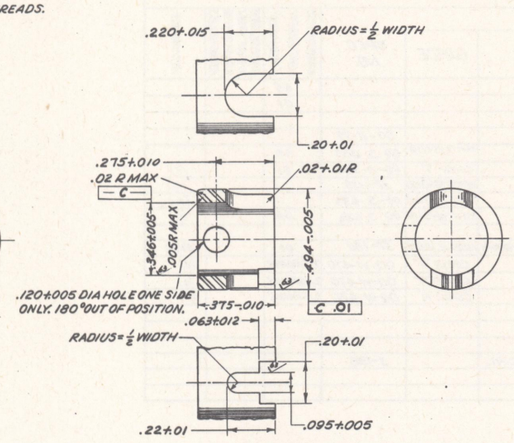
STEEL, FSX 1314, FSX 1315 OR FS 1115, COLD-DRAWN.
FINISH

MINIMUM PHYSICAL PROPERTIES

T.S. 70,000	EL. 12%
Y.P. 60,000	RED. 25%

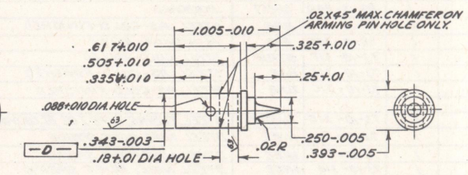
MUST ALSO MEET ECCENTRICITIES SHOWN ON ASSEMBLY 82-5-23A.

INSPECT 100% FOR PIPES (INTERNAL SEAMS, CRACKS OR FISSURES.)



SLIDER 73-10-3182

TUBING, STEEL, WD 1020 OR WD 1015, TYPE I OR III, COLD-DRAWN.
FINISH

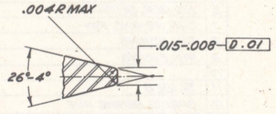


PIN, FIRING 73-10-31C2

STEEL, FSX 1314 OR FSX 1315, COLD-DRAWN.
FINISH

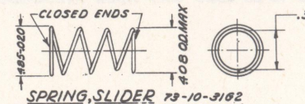
MINIMUM PHYSICAL PROPERTIES

T.S. 70,000	EL. 12%
Y.P. 60,000	RED. 25%



ENLARGED VIEW OF POINT

ALL DIMENSIONS TAKEN AFTER PLATING.
BREAKS IN .393-.005 DIMENSION PERMITTED IN CONNECTION WITH CHAMFERS ON ARMING PIN HOLE ONLY.



SPRING, SLIDER 73-10-3162

STEEL WIRE, MUSIC SPRING, COMP A

REQUIREMENTS

A-SOLID HEIGHT NOT OVER .1 INCH.
B-SEASON THOROUGHLY AFTER WINDING.
C-TREAT, TO REMOVE EMBRITTLEMENT, WITHIN 24 HOURS AFTER PLATING.
D-LOAD AT .125 INCH = .65 LBS MAX.
E-LOAD AT ASSEMBLED HEIGHT .25 INCH = .35 LBS MIN (OCCASIONAL CHECK WILL BE MADE AFTER COMPRESSION FOR AT LEAST 24 HOURS AT THE ASSEMBLED HEIGHT).
F-LOADS APPLY AFTER SEASONING, PLATING AND TREATMENT TO REMOVE EMBRITTLEMENT.

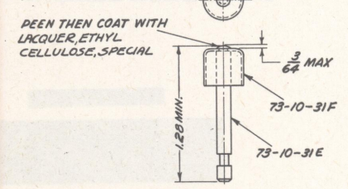
ADVISORY DATA

(MAY BE VARIED TO MEET REQUIREMENTS.)

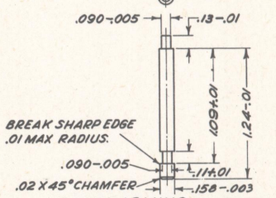
A-DIAMETER OF WIRE = .02 INCH.
B-TOTAL NUMBER OF COILS = 5.5.
C-NUMBER OF ACTIVE COILS = 3.
D-ADJUST FREE HEIGHT TO MEET LOAD REQUIREMENTS. SUGGESTED TRIAL FREE HEIGHT = .8 INCH.
E-SEASON BY HEATING TO 500° F FOR 30 MINUTES.
F-TO REMOVE EMBRITTLEMENT, HEAT TO 300° F FOR AT LEAST 30 MINUTES, AS SOON AFTER PLATING AS PRACTICABLE.

[redacted]

FOR ALTERNATIVE MATERIALS AND PROTECTIVE FINISHES SEE DRG. 73-10-30A.

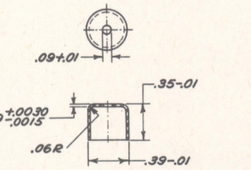


ARMING PIN ASSEMBLY 73-10-31D1



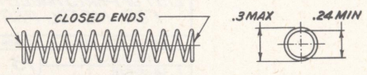
PIN, ARMING 73-10-31E2

STEEL, FS 1035 TO FS 1060, COLD-DRAWN
FINISH



CUP, ARMING PIN 73-10-31F1

STEEL, WD 1010 TO WD 1020, COLD-ROLLED, TEMPER NO. 4 (SOFT SKIN-ROLLED), FINISH NO. 1 (DULL)
FINISH



SPRING, ARMING PIN 73-10-31H1

STEEL WIRE, MUSIC SPRING, COMP A

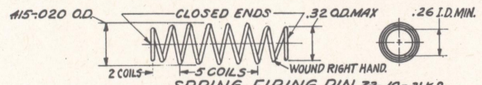
REQUIREMENTS

A-SOLID HEIGHT NOT OVER .31 INCH.
B-SEASON THOROUGHLY AFTER WINDING.
C-TREAT, TO REMOVE EMBRITTLEMENT, WITHIN 24 HOURS AFTER PLATING.
D-LOAD AT 1.4 INCHES = .18 LBS MIN.
E-LOAD AT ASSEMBLED HEIGHT .35 INCH = 1.25 LBS MAX (OCCASIONAL CHECK WILL BE MADE AFTER COMPRESSION FOR AT LEAST 24 HOURS AT THE ASSEMBLED HEIGHT).
F-LOADS APPLY AFTER SEASONING, PLATING AND TREATMENT TO REMOVE EMBRITTLEMENT.

ADVISORY DATA

(MAY BE VARIED TO MEET REQUIREMENTS.)

A-DIAMETER OF WIRE = .02 INCH.
B-TOTAL NUMBER OF COILS = 14.
C-NUMBER OF ACTIVE COILS = 12.
D-ADJUST FREE HEIGHT TO MEET LOAD REQUIREMENTS. SUGGESTED TRIAL FREE HEIGHT = 1.61 INCHES.
E-SEASON BY HEATING TO 500° F FOR 30 MINUTES.
F-TO REMOVE EMBRITTLEMENT, HEAT TO 300° F FOR AT LEAST 30 MINUTES AS SOON AFTER PLATING AS PRACTICABLE.



SPRING, FIRING PIN 73-10-31K2

STEEL WIRE, MUSIC SPRING, COMP A

REQUIREMENTS

A-SOLID HEIGHT NOT OVER .15 INCH.
B-SEASON THOROUGHLY AFTER WINDING.
C-TREAT, TO REMOVE EMBRITTLEMENT, WITHIN 24 HOURS AFTER PLATING.
D-LOAD AT .17 INCH = 10.5 OZS MAX.
E-LOAD AT ASSEMBLED HEIGHT AS INCH = 4 OZ MIN (OCCASIONAL CHECK WILL BE MADE AFTER COMPRESSION FOR AT LEAST 24 HOURS AT THE ASSEMBLED HEIGHT).
F-LOADS APPLY AFTER SEASONING, PLATING AND TREATMENT TO REMOVE EMBRITTLEMENT.

ADVISORY DATA

(MAY BE VARIED TO MEET REQUIREMENTS)

A-DIAMETER OF WIRE = .013 INCH.
B-TOTAL NUMBER OF COILS = 9.
C-NUMBER OF ACTIVE COILS = 7.
D-ADJUST FREE HEIGHT TO MEET LOAD REQUIREMENTS. SUGGESTED TRIAL FREE HEIGHT = 1.3 INCHES.
E-SEASON BY HEATING TO 500° F FOR 30 MINUTES.
F-TO REMOVE EMBRITTLEMENT, HEAT TO 300° F FOR AT LEAST 30 MINUTES AS SOON AFTER PLATING AS PRACTICABLE.

REMOVE ALL BURRS.

CLASSIFICATION CHANGED TO UNCLASSIFIED, BY AUTHORITY OF ODO NO. 31-46, BY M.J. Hamilton DATE AUG 20, 1948.

SCALE, INCHES, 2/1, 4/1, 20/1.

FUZE, ROCKET, BD, M401. DETAILS.

JUNE 28, 1945

REVISIONS		CLASS	DIVISION	DRAWING	FILE
1	8-15-45	73	10	31	
2	8-20-48				

TOLERANCE ON DIMENSIONS NOT OTHERWISE SPECIFIED
DECIMAL ±
FRACTIONAL ±
ANGULAR ±

DRG. PERTAINS TO 73-10-30

D'TSMAN T.W.R. | TRACER M.S. | ENGINEER | CHECKED E.V.S. | HEAD ENGINEER

SUBMITTED:- A.M. Gallagher LT. COL., ORD. DEPT., U.S.A.

EXAMINED:- Frank Gatchell LT. COL., ORD. DEPT., U.S.A.

APPROVED BY ORDER OF THE CHIEF OF ORDNANCE:- C.S. Reed by a.a. COL., ORD. DEPT., U.S.A.

D

ORDNANCE DEPT., U.S.A.