BOOK NO. 7

SET NO._____

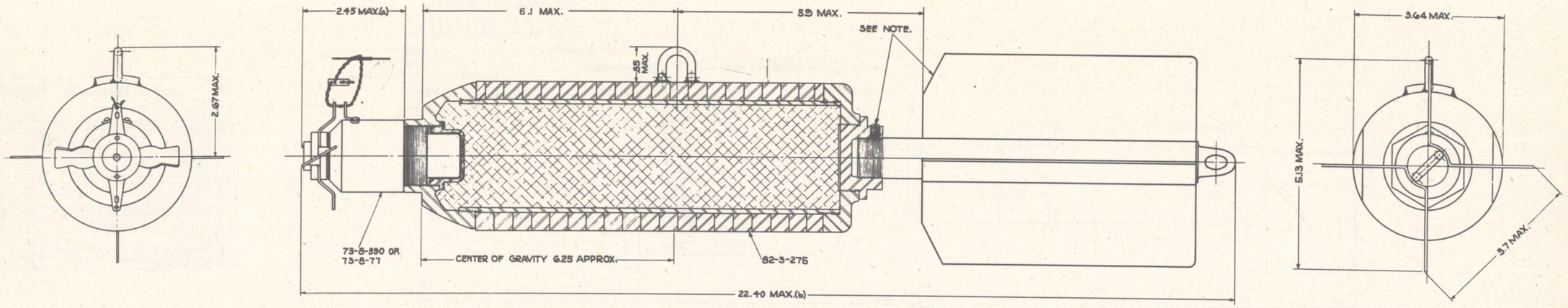
STUDY GUIDE

ORDNANCE

AMMUNITION DRAWINGS

82-0-39 TO 82-16-21A

TO BE USED BY AMMUNITION INSPECTORS SCHOOL, SAVANNA ORDNANCE DEPOT



ASSEMBLY 82-0-39 A4

(a) WHEN FUZE, AN-M110A1 IS USED, THIS DIMENSION IS 2.4 MAX.
(b) WHEN FUZE, AN-M110A1 IS USED, THIS LENGTH IS 22.35 MAX.

LINE NO.	NAME OF COMPONENT	DRAWING NUMBER OR PIECEMARK	APPROX. WEIGHT (POUNDS)
1	ASSEMBLY, COMPLETE	82-0-39	20.2
2	ASSEMBLY (WITHOUT FUZING COMPONENTS)	82-3-275	19.2
3	FUZE, BOMB, NOSE, AN-M110A1	73-8-77	1.02
4	FUZE, BOMB, NOSE, M158	73-8-390	1.02
5			
6			

LINE NO.	DESIGN DATA	
	NOMENCLATURE	WEIGHT (LBS)
1	BODY ASSEMBLY (WITHOUT CLOSING PLUG)	14.9
2	FIN ASSEMBLY	1.6
3	FUZE, BOMB, NOSE, AN-M110A1	1.02
4	FUZE, BOMB, NOSE, M158	1.02
5	EXPLOSIVE (TNT)	2.7
6	TOTAL	20.2
7	PERCENTAGE OF EXPLOSIVE BY WEIGHT	13%

NOTICE THIS DRAWING SHALL NOT BE [illegible] WITHOUT THE WRITTEN PERMISSION OF THE [illegible] OF THE UNITED STATES GOVERNMENT, FOR THE PRESENT

NOTE:-
FOR VERTICAL SUSPENSION, ASSEMBLE ONE FIN BLADE IN LINE WITH SUSPENSION LUG.
FOR HORIZONTAL SUSPENSION, ASSEMBLE FIN BLADES AT 45° TO SUSPENSION LUG.

0 1 2 3 4 5 6 7 8 9 10 11 INCHES

SUPERSEDES OLD TRACING 82-0-39 UNDER REVISION DATE OF APRIL 20, 1944.

BOMB, FRAGMENTATION, 20 LB., AN-M41A1. ASSEMBLY, COMPLETE.

JULY 8, 1940

REVISIONS	
1	10-16-40
2	2-1-43
3	4-20-44
4	8-15-45

DRG. PERTAINS TO

CLASS	DIVISION	DRAWING	FILE
82	0	39	

TOLERANCE ON DIMENSIONS NOT OTHERWISE SPECIFIED
DECIMAL ±
FRACTIONAL ±
ANGULAR ±

DFTSMAN EWS | TRACER EWS | ENGINEER

CHECKER NWF | PRINCIPAL ENGINEER

SUBMITTED: [signature] LT. COL., ORD. DEPT. U.S.A.

EXAMINED: H. H. Bekman ORD. DEPT. U.S.A.

APPROVED BY ORDER OF THE CHIEF OF ORDNANCE: C. S. Reed by as. COL., ORD. DEPT. U.S.A.

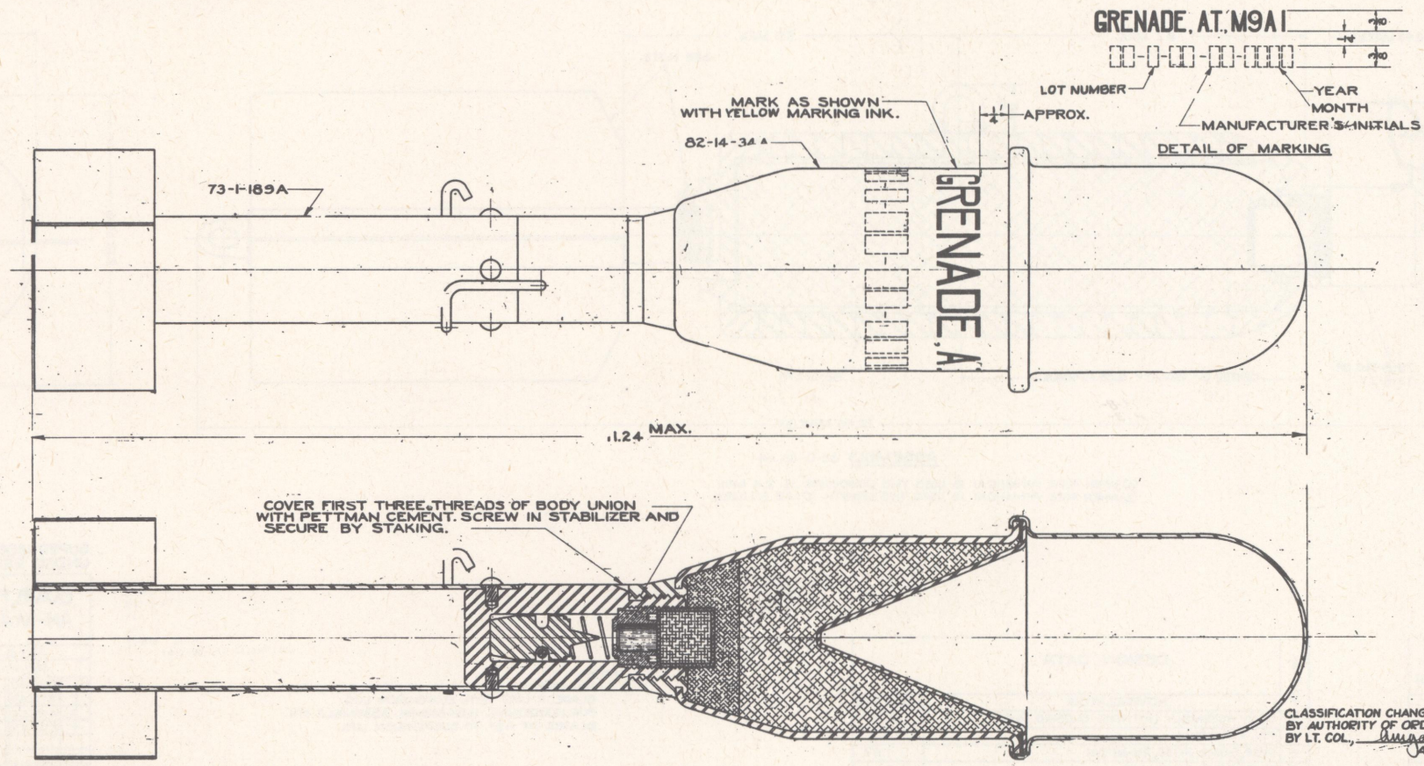
D

ORDNANCE DEPT., U.S.A.

LIST OF COMPONENTS, ETC.

LINE NO	NAME OF COMPONENT	DRAWING NUMBER OR PIECE-MARK	SPEC.	APPROX. WEIGHT PER UNIT ASSEMBLY (POUNDS)	REMARKS
1	ASSEMBLY	82-0-67A		1.23	
2	ASSEMBLY, BODY, OGIVE AND CONE LOADING	82-14-34A		.76	
3	ASSEMBLY, FUZE AND STABILIZER	73-1-189A		.47	
4					
5	CARTRIDGE				
6	CEMENT, PETTMAN		50-11-8		
7					
8	ENVELOPE				
9					
10	INK, YELLOW MARKING		36-2		

"LOPHANE 450"



ASSEMBLY, 82-0-67A2

CLASSIFICATION CHANGED TO RESTRICTED BY AUTHORITY OF ORD. DEPT. ORDER 43-44 BY LT. COL., [redacted] AUGUST 15, 1945

LINE NO.	LIST OF DRAWINGS	DRAWING NUMBER
1	ASSEMBLY	82-0-67
2	ASSEMBLY, BODY, OGIVE & CONE LOADING	82-14-34
3	ASSEMBLY, FUZE & STABILIZER	73-1-189
4	LIST OF METAL PARTS & LIST OF SPECIFICATION	82-1-75
5	METAL PARTS, DETAILS	82-1-76
6	ASSEMBLY, STABILIZER	82-1-77
7	METAL PARTS, DETAILS	82-1-78
8	CONTAINER	76-1-801
9	PACKING & MARKING OF CONTAINER	76-1-802
10	BOX, PACKING ASSEMBLY	76-1-803
11		
12	PACKING & MARKING OF BOX	20-4-502
13	STABILIZER ASSEM, LIST OF PARTS AND LIST OF SPEC.	82-1-77A

GRENADE, RIFLE, A.T. M9A1
ASSEMBLY

APRIL 14, 1942

REVISIONS

1	11-8-42	
2	8-15-45	

DRG. PERTAINS TO

D/

CLASS	DIVISION	DRAWING	FILE
82	0	67	

SYMBOL

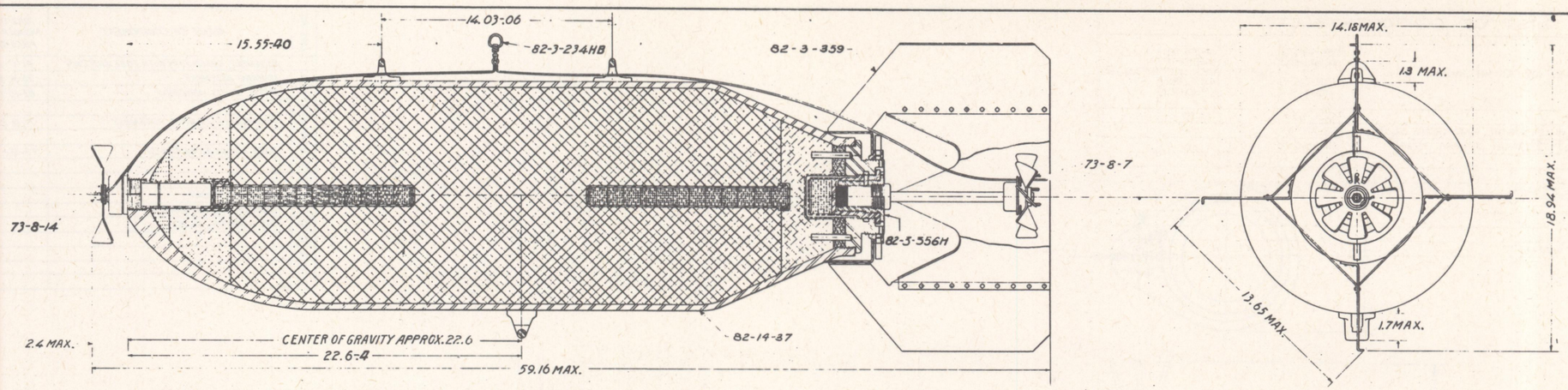
DRAFTSMAN	TRACER	L'DS DFTSMAN
W. LAWTON	W.L. LAWTON	
CHECKER T.J.	CHECKER T.J.	CHIEF DFTSMAN

SUBMITTED:
[redacted]
MAJOR, ORD. DEPT. U.S.A.

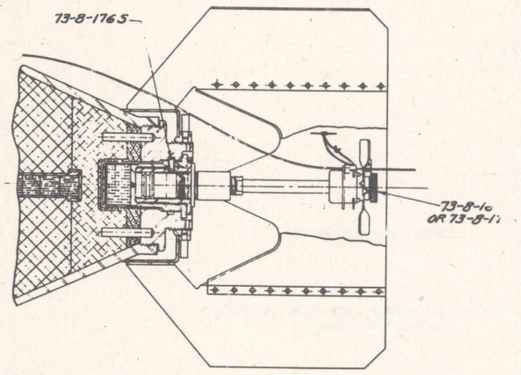
EXAMINED:
[redacted]
COL., ORD. DEPT. U.S.A.

APPROVED:
[redacted]
BRIG. GEN., DEPT. U.S.A.

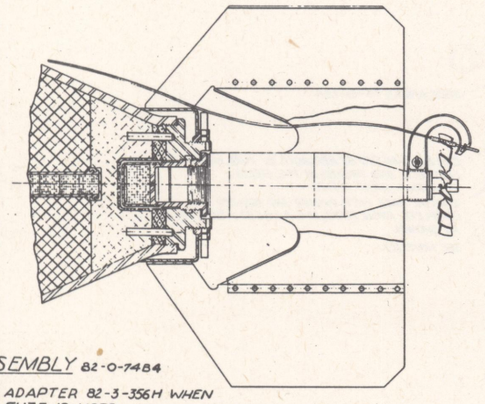
ORDNANCE OFFICE WAR DEPT.



ASSEMBLY 82-0-74A4



ASSEMBLY 82-0-74C4



ASSEMBLY 82-0-74B4

REMOVE FUZE ADAPTER 82-3-356H WHEN HYDROSTATIC FUZE IS USED.

LINE NO.	NAME OF COMPONENT	ASSEMBLY 82-0-74A		ASSEMBLY 82-0-74B		ASSEMBLY 82-0-74C	
		DRG. NO. OR PIECE MARK	APPROX. WEIGHT (POUNDS)	DRG. NO. OR PIECE MARK	APPROX. WEIGHT (POUNDS)	DRG. NO. OR PIECE MARK	APPROX. WEIGHT (POUNDS)
1	ASSEMBLY, COMPLETE	82-0-74A	540.6	82-0-74B	551.0	82-0-74C	536.8
2							
3	BOMB LOADING ASSEMBLY (WITHOUT FUZING COMPONENTS,	82-14-37	515.0	82-14-37	515.0	82-14-37	515.0
4	SHIPPING BANDS, AND FIN LOCK NUT PROTECTOR)						
5							
6	FIN ASSEMBLY	82-3-359	18.6	82-3-359	18.6	82-3-359	18.6
7	FUZE, BOMB, NOSE, M103 OR AN-M103	73-8-14	4.0	73-8-14	4.0	———	———
8	FUZE, BOMB, TAIL, AN-M101A1 OR A2, 1 SECOND DELAY	73-8-7	2.9	———	———	———	———
9	FUZE, TAIL, HYDROSTATIC, AN-MK 230	———	———	———	14.5	———	———
10	FUZE, BOMB, TAIL, M124	———	———	———	———	73-8-1765 OR 73-8-710	3.09
11	ARMING WIRE ASSEMBLY	82-3-234HB	.1		.1	82-3-234HB	.1

LINE NO.	DESIGN DATA NOMENCLATURE	ASSEMBLY 82-0-74A WEIGHT (LBS)	ASSEMBLY 82-0-74B WEIGHT (LBS)	ASSEMBLY 82-0-74C WEIGHT (LBS)
1	BODY (METAL PARTS ASS'Y WITHOUT CLOSING PLUGS, SHIPPING BANDS AND FIN LOCK NUT PROTECTOR)	250.0	250.0	250.0
2	FIN ASSEMBLY	18.6	18.6	18.6
3	ADAPTER-BOOSTER, M115A1 (TAIL)	3.36	2.16	3.36
4	FUZE, TAIL, HYDROSTATIC, AN-MK230	———	14.5	———
5	FUZE, BOMB, NOSE, M103 OR AN-M103	4.0	4.0	———
6	FUZE, BOMB, TAIL, AN-M101A1 OR A2, 1 SECOND DELAY	2.90	———	———
7	FUZE, BOMB, TAIL, M124	———	———	3.09
8	ARMING WIRE ASSEMBLY	.10	.10	.10
9	EXPLOSIVE (50-50 AMATOL) INCLUDING AUX. BOOSTERS AND SURROUNDS	258.9	258.9	258.9
10	SEALER, INERT, NOSE AND TAIL	2.7	2.7	2.7
11	TOTAL	540.6	551.	536.8
12	PERCENTAGE OF EXPLOSIVE BY WEIGHT	48.%	47.%	48.%

0 3 6 9 12 15 18 21 24 27 30 33 INCHES

NOTICE: THIS DRAWING SHALL NOT BE [illegible] REPRODUCED [illegible] OR MADE PUBLIC EXCEPT [illegible] AUTHORIZED IN CONFORMITY WITH REGULATIONS OF THE DEPARTMENT OF THE ARMY.

BOMB, G.P., 500LB., AN-M64A1 ASSEMBLY, COMPLETE.

MAY 26, 1942

REVISIONS	CLASS	DIVISION	DRAWING	FILE
1 2-1-43	82	0	74	
2 12-21-43				
3 4-10-44				
4 7-31-45				
5 8-15-45				

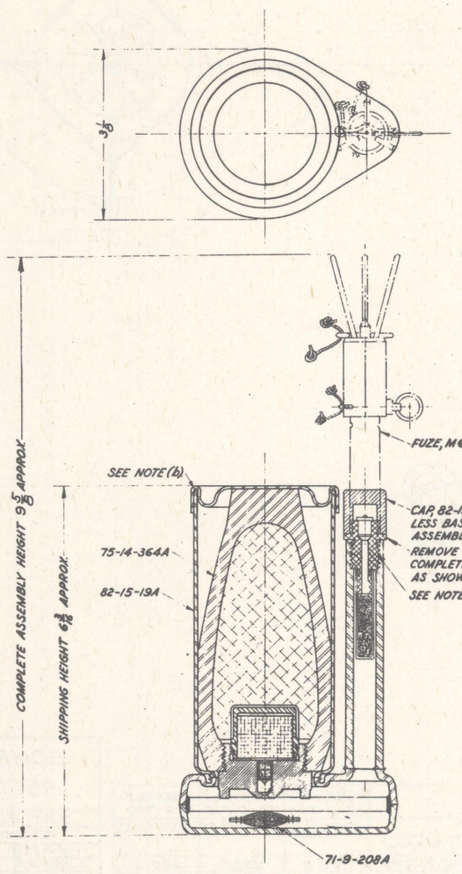
DRG. PERTAINS TO

D

DFTSMAN T.W.R | TRACER T.W.R. | CHECKED N.W.F. | SUBMITTED R. L. Butler Jr. LT. COL., ORD. DEPT., U.S.A. | EXAMINED [illegible] COL., ORD. DEPT., U.S.A. | APPROVED BY ORDER OF THE CHIEF OF ORDNANCE: [illegible] for BRIG. GEN., ORD. DEPT., U.S.A.

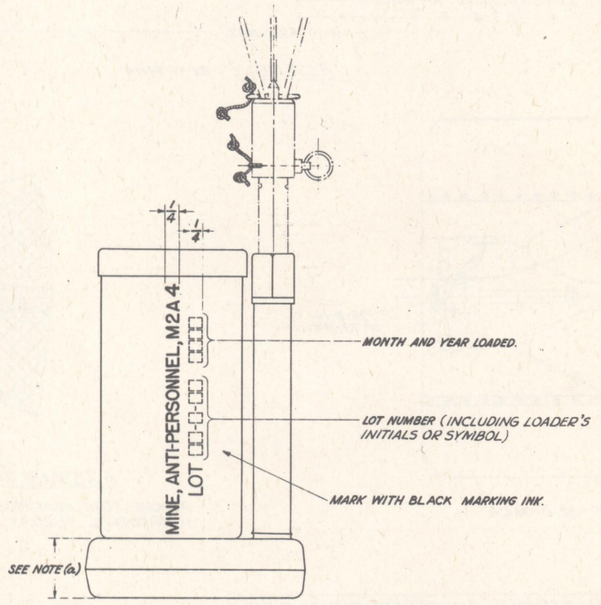
ORDNANCE DEPT., U.S.A.

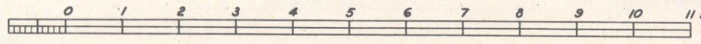
LINE NO.	NAME OF COMPONENT	DRAWING NUMBER OR PIECEMARK	SPECIFICATION NUMBER	APPROX UNIT WEIGHT (POUNDS)	REMARKS
1	ASSEMBLY, COMPLETE (WITH FUZE AND CAP)	82-0-99A		5.01	
2	LOADING ASSEMBLY	75-14-364	AXS-740	2.84	
3	METAL PARTS ASSEMBLY	82-15-19A	AXS-739	4.35	
4					
5	PROPELLING CHARGE ASSEMBLY	71-9-208A		.003	1 REQD
6					
7	FUZE, M6A1 ASSEMBLY	73-9-13A		.29	
8					
9					
10	CEMENT, PETTMAN		50-11-8		(b)
11	ENAMEL, YELLOW, GRADE I		3-67		(a)
12	INK, MARKING, BLACK		36-2		
13					
14					
15					
16					



ASSEMBLY, COMPLETE 82-0-99A 2.

(a) THIS PORTION OF PROJECTOR BODY TO BE COATED WITH YELLOW ENAMEL.
(b) APPLY PETTMAN CEMENT TO GROOVE AND ASSEMBLE WATER TIGHT. (PETTMAN CEMENT OR ACCEPTED EQUIVALENT).
(c) THREADS TO BE COATED WITH PETTMAN CEMENT. WHILE WET, ASSEMBLE AND STAKE SIMULTANEOUSLY AT THREE EQUALLY SPACED POINTS ON THE PERIPHERY OF THE PIPE APPROX. 3/16 BELOW THE TOP, USING FLAT FACED PUNCHES OF APPROX. .1 DIA.





MINE, ANTI-PERSONNEL, M2A4 COMPLETE ASSEMBLY.

OCTOBER 14, 1943

CLASS	DIVISION	DRAWING	FILE
82	0	99	

REVISIONS

1	9-8-44	
2	8-15-45	

TOLERANCE ON DIMENSIONS NOT OTHERWISE SPECIFIED
DECIMAL ±
FRACTIONAL ±
ANGULAR ±

DRAFTSMAN HR | TRACER HR | ENGINEER | CHECKER | SENIOR ENGINEER

SUBMITTED:
[signature]
COLONEL, ORD. DEPT., U.S.A.

EXAMINED:
[signature]
COLONEL, ORD. DEPT., U.S.A.

APPROVED BY ORDER OF THE CHIEF OF ORDNANCE:
[signature]
COLONEL, ORD. DEPT., U.S.A.

DRG. PERTAINS TO

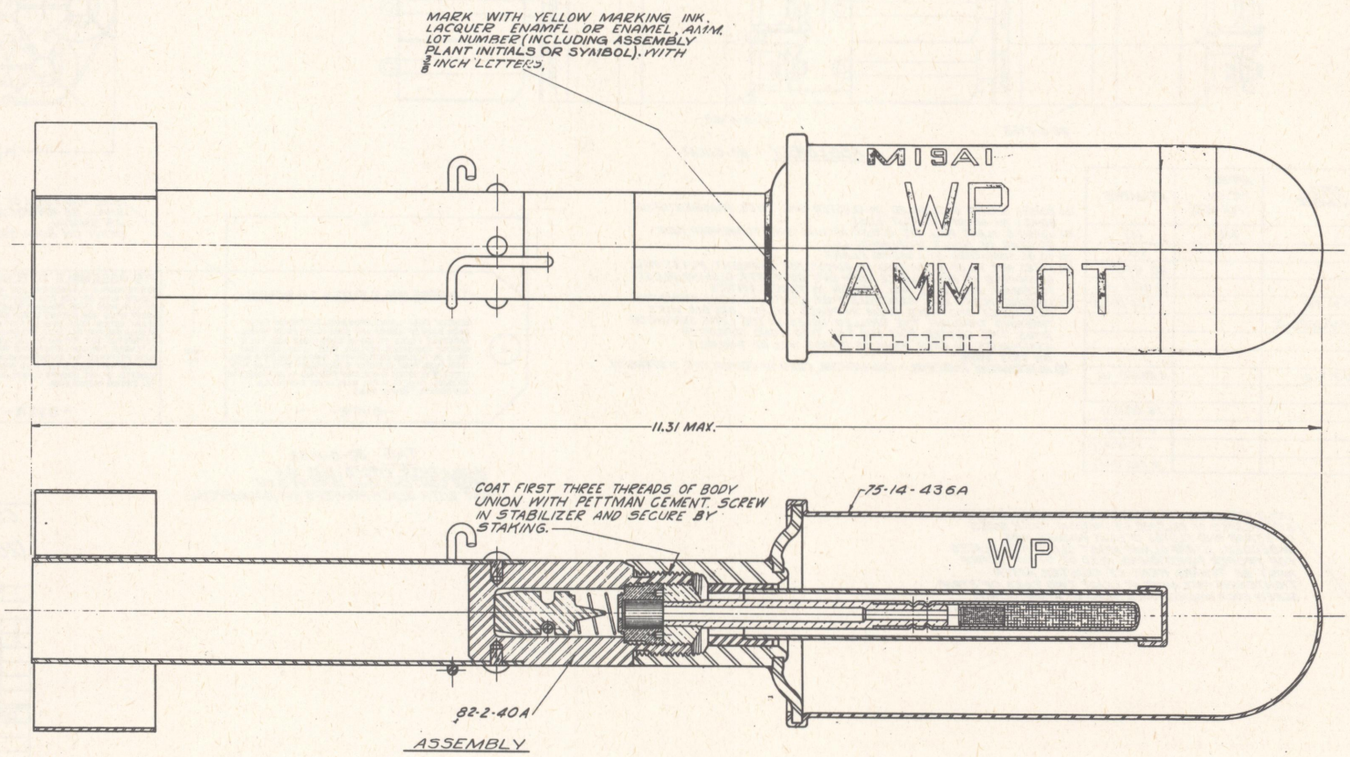
D

ORDNANCE DEPT., U.S.A.

LIST OF COMPONENTS, ETC.

LINE NO.	NAME OF COMPONENT	DRAWING NUMBER OR PIECE MARK	SPECIFICATION NUMBER	APPROX WEIGHT PER UNIT ASSEMBLY (POUNDS)	APPROX. GROSS WEIGHT PER UNIT ASSEMBLY (POUNDS)	REMARKS
1	ASSEMBLY	82-0-109	AXS-1198	1.57		
2	LOADING ASSEMBLY	75-14-436A		1.04		(a)
3	FUZE AND STABILIZER ASSEMBLY	82-2-40	AXS-1198	.5		
4	INK, YELLOW, MARKING		36-2			(b) (c)
5						
6						
7						
8						
9	PACKING AND MARKING OF CONTAINERS FOR GRENADES, RIFLE	75-14-450				
10	PACKING AND MARKING OF BOX AND CARTON FOR GRENADES, RIFLE	20-4-436				

(a) COVERED BY CHEMICAL WARFARE SERVICE SPECIFICATION
(b) ALTERNATIVE- NO.316 GRADE I, LACQUER ENAMEL SPEC. 3-162 OR ENAMEL, SPEC. 3-67
(c) COLOR NO.3110, COLOR CARD SUPPLEMENT TO SPEC. 3-1



OBSOLESCENT

CLASSIFICATION CHANGED TO UNCLASSIFIED
BY AUTHORITY OF OCM NO. 23532
BY [redacted]

[redacted]

GRENADE, RIFLE SMOKE WP, M19A1 ASSEMBLY

FEBRUARY 5, 1944	CLASS	DIVISION	DRAWING	FILE
REVISIONS	82	0	109	
1 APRIL 1944	SYMBOL			
2 10-23-44				
3 4-6-45				
4 7-8-45				

DRAFTSMAN	TRACER	HDQ. DESIGN
J.G.M.	J.G.M.	[illegible]
CHECKED W.R.	CHECKED	CHIEF DRAFTSMAN [illegible]

SUBMITTED: W. W. Hoover
COL, ORD DEPT U.S.A.

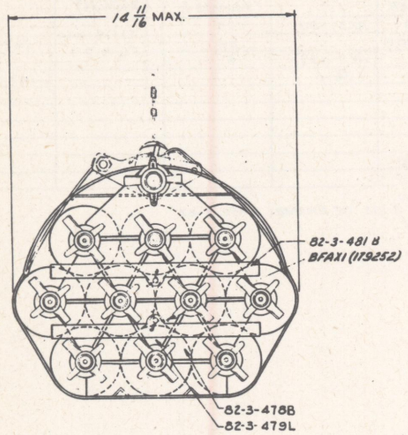
EXAMINED: B. G. Lasher
COL, ORD DEPT U.S.A.

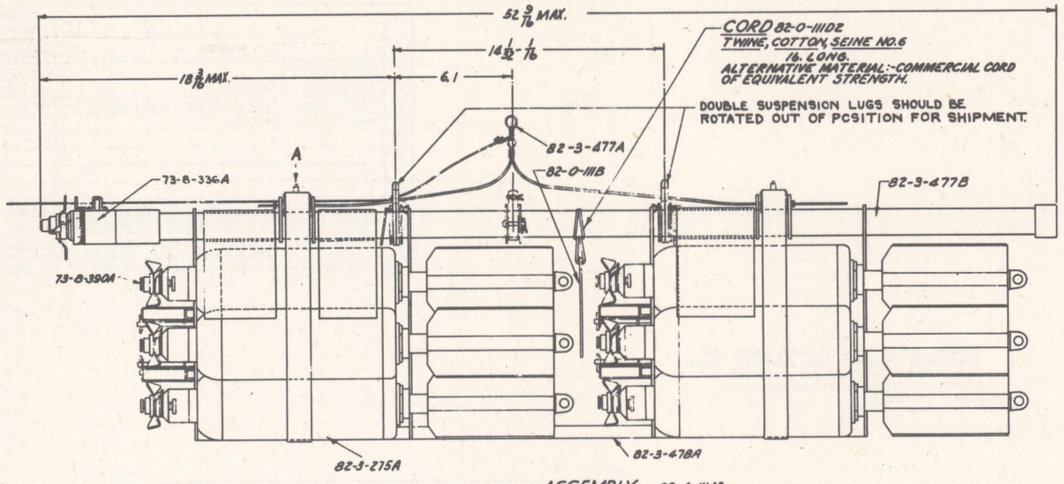
APPROVED: [illegible]
MAJ. GEN., ORD DEPT U.S.A.

DRG PERTAINS TO

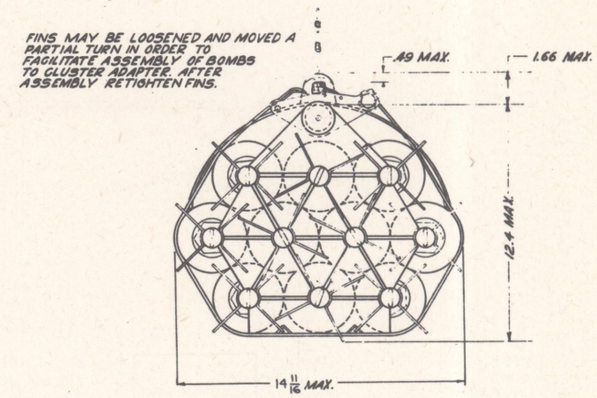
D

ORDNANCE OFFICE WAR DEPT.



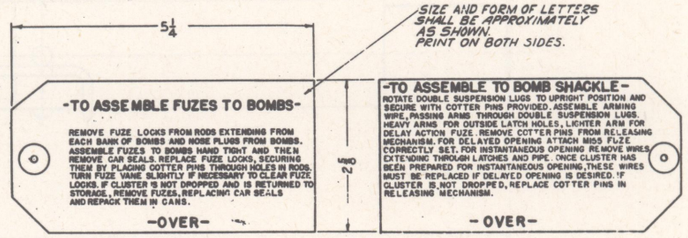


ASSEMBLY 82-0-111A2

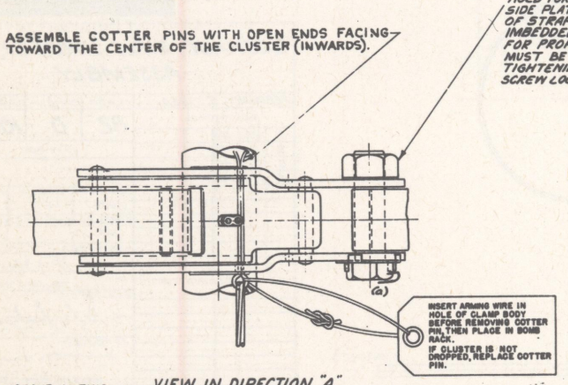


LINE NO.	NAME OF COMPONENT	DRAWING NUMBER OR PIECEMARK	SPEC. NUMBER	APPROX. WEIGHT (POUNDS)	REMARKS
1	ASSEMBLY	82-0-111		416.	(b)
2	ARMING WIRE ASSEMBLY	82-3-477			(c)
3	BOMB, FRAG., 20 LB., AN-M41A1	82-3-275			20 REQ'D.
4	FUZE, BOMB, NOSE, M158	73-8-390			20 REQ'D. (e)
5	CORD	82-0-111D	T-T-881		1 REQ'D(d)(g)
6	INK, PRINTERS, BLACK		COMMERCIAL		
7	METALS PARTS ASSEMBLY AND DETAILS	82-3-477			
8	FUZE, BOMB, NOSE, MECHANICAL TIME, M155	73-8-336			
9	TAG	82-0-111 B	UU-T-81		1 REQ'D (d)
10	REST ASSEMBLY	82-3-478A			
11	SHORT SEPARATOR ASSEMBLY	82-3-478B			16 REQ'D.
12	LONG SEPARATOR ASSEMBLY	82-3-479L			4 REQ'D.
13	REMOVABLE FUZE LOCK	82-3-481 B			4 REQ'D.(f)
14	COTTER PIN	BFAX1 (179252)			4 REQ'D.(f)

(b) BOMBS SHOWN ASSEMBLED IN CLUSTER ARE 20 LB. FRAGMENTATION BOMBS AN-M41A1 WITHOUT LUGS.
(c) LOADING PLANT WILL TIE COILED ARMING WIRE TO MEMBER TUBE AT REAR OF SINGLE SUSPENSION LUG.
(d) TO BE FURNISHED BY LOADING PLANT.
(e) FUZES NOT TO BE ASSEMBLED TO BOMBS FOR SHIPMENT. FUZES WILL BE SHIPPED IN ACCORDANCE WITH DRG. 20-4-577, CLOSING PLUGS PIECEMARK 82-3-256C WILL REMAIN IN FUZE CAVITIES.
(f) LOADING PLANT WILL ASSEMBLE FUZE LOCKS TO LONG SEPARATOR ASSEMBLIES AND HOLD THEM IN PLACE BY AN .032 DIA. WIRE THREADED THROUGH THE DRILLED HOLES IN THE LONG SEPARATOR RODS. TWO COTTER PINS FOR THE TWO LONG SEPARATOR ASSEMBLIES IN EACH BANK OF BOMBS WILL BE THREADED ON THIS WIRE.
(g) ALTERNATIVE MATERIAL:- COMMERCIAL CORD OF EQUIVALENT STRENGTH.

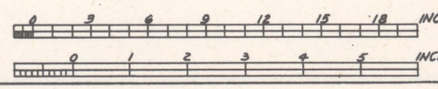


TAG 82-0-111B2
MANILA PAPER TYPE "B" SIZE NO.6
FIBER CONTENT, 15JU, 15WO OR 15 SU
PRINT WITH BLACK PRINTERS INK, COMMERCIAL.



(a) APPLY TORQUE IN THIS DIRECTION ONLY.

VIEW IN DIRECTION "A"



CLUSTER, FRAG. BOMB, M26A2 (500 LB., SIZE) (20-BOMBS, FRAG., 20LB., AN-M41A1) ASSEMBLY, COMPLETE

MAR. 17, 1944

REVISIONS			
1	5-16-45		
2	8-15-45		

DRG. PERTAINS TO

CLASS	DIVISION	DRAWING	FILE
82	0	111	

TOLERANCE ON DIMENSIONS NOT OTHERWISE SPECIFIED
DECIMAL ±
FRACTIONAL ±
ANGULAR ±

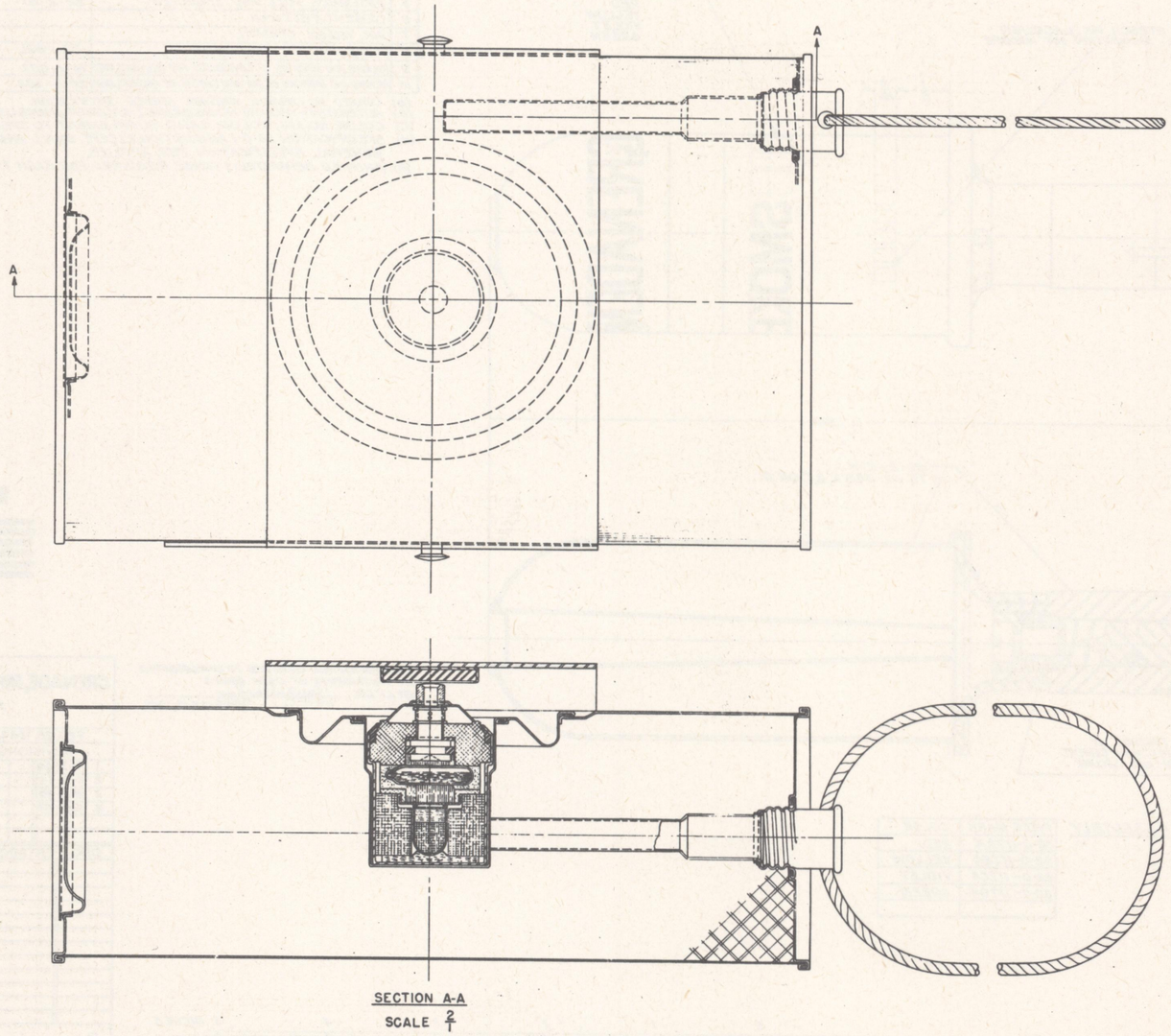
DRAFTSMAN	TRACED	ENG. VERIF.
A.B.	J.G.V.	
CHECKER		ENG. VERIF.
H.R.		

SUBMITTED- R. B. Cutts, Jr. COL., ORD. DEPT., U.S.A.
EXAMINED- J. G. Lake COL., ORD. DEPT., U.S.A.
APPROVED BY ORDER OF THE CHIEF OF ORDNANCE- MAJ. GEN., ORD. DEPT., U.S.A.

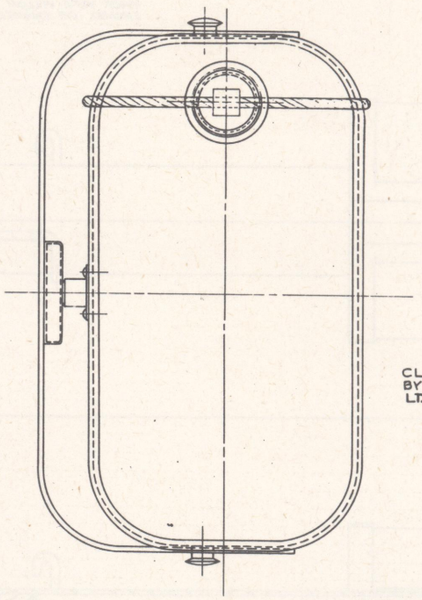
D

ORDNANCE DEPT., U.S.A.

LINE NO.	NAME OF COMPONENT	DRAWING NUMBER OR PIECE MARK	APPROX. WEIGHT POUNDS
1	ASSEMBLY COMPLETE	82-0-114	
2			
3	MINE, AT, HE, LIGHT, M7A1, ASSEMBLY	75-14-444	
4	FUZE, CHEMICAL, MINE, AT, M600 ASSEMBLY	73-9-27	
5			
6			



SECTION A-A
SCALE 2/1



CLASSIFICATION CHANGED TO UNCLASSIED
BY AUTHORITY OF O.C.M. 25174
LT. COL., [signature]
DATE NOV 14, 1944

[redacted]

MINE, AT, HE, LIGHT, M7A1
ASSEMBLY COMPLETE

FEB. 3, 1944 REVISIONS				CLASS	DIVISION	DRAWING	FILE
1	7-11-44			82	0	114	
2	11-14-44						
3	8-15-45						

TOLERANCE ON DIMENSIONS NOT OTHERWISE SPECIFIED
DECIMAL ±
FRACTIONAL ±
ANGULAR ±

DRG. PERTAINS TO					

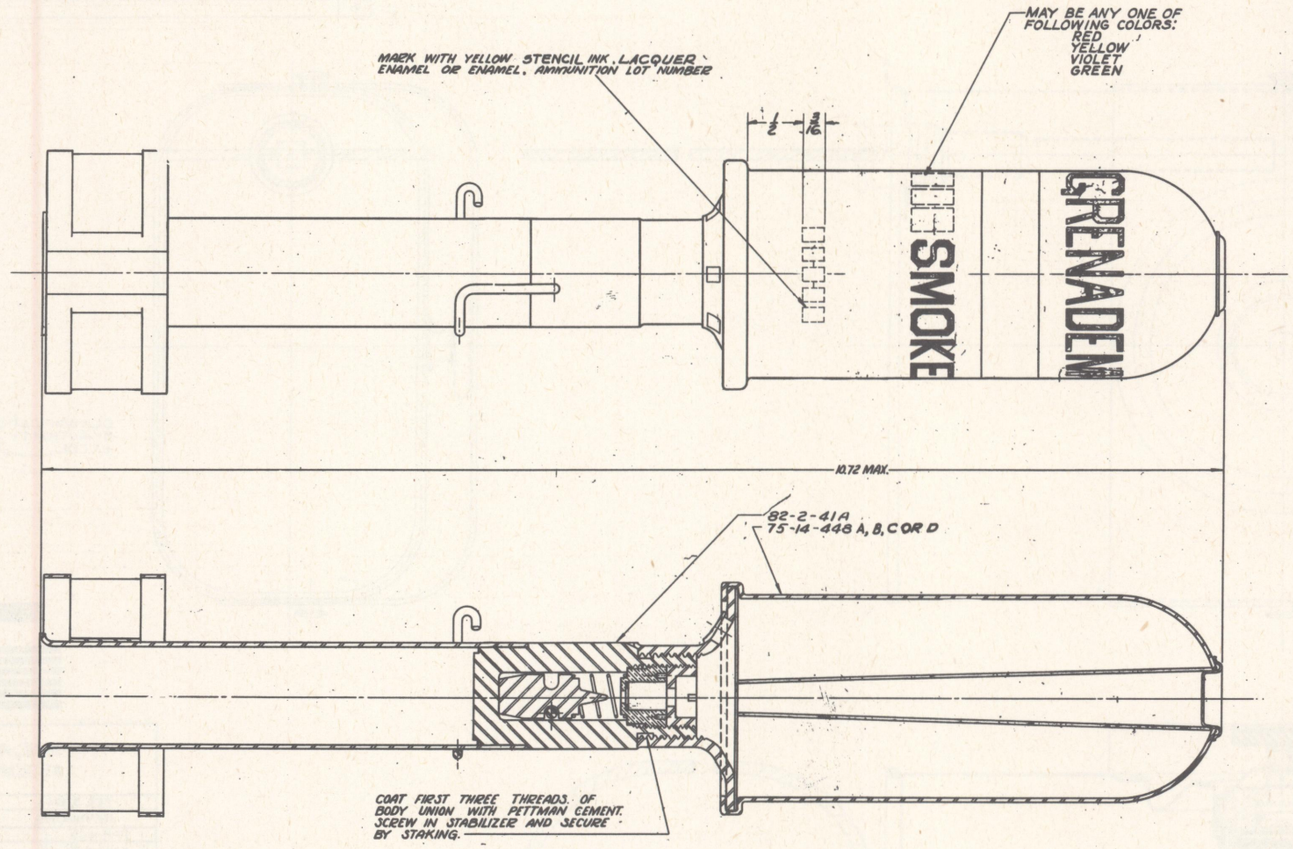
D'FTSMAN	TRACER F.W.K.	S&B ENG'NEER
CHECKER A.A.T.		PROJ. ENGINEER

SUBMITTED: Paul L. Christensen
MAJ. ORD. DEPT. U.S.A.

EXAMINED: [signature]
COL., ORD. DEPT. U.S.A.

APPROVED BY ORDER OF THE CHIEF OF ORDNANCE:
[signature]
COL., ORD. DEPT. U.S.A.

ORDNANCE DEPT., U.S.A.



ASSEMBLY

PIECE MARK	COLOR
82-0-117A4	RED
82-0-117B4	YELLOW
82-0-117C4	VIOLET
82-0-117D4	GREEN

LIST OF COMPONENTS, ETC.

LINE NO.	NAME OF COMPONENT	DRAWING NUMBER OR PIECEMARK	SPECIFICATION NUMBER	APPROX. WEIGHT PER UNIT ASSEMBLY (POUNDS)	REMARKS
1	ASSEMBLY	SEE TABLE	50-50-12	1.26	(d)
2	BOX, PACKING, FOR GRENADES, RIFLE	76-1-803			
3	ASSEMBLY, BODY, LOADING	75-14-448		.76	(a)
4	CONTAINER, METAL, FOR GRENADES, RIFLE	76-1-801			
5	ASSEMBLY, FUZE AND STABILIZER	82-2-41		.50	
6	CEMENT, PETTMAN		JAN-C-99		
7	INK, YELLOW, STENCIL		TT-I-558		(b) (c)
8	CLIP, LAUNCHER POSITIONING	82-1-86L			(e)
9	PACKING AND MARKING OF CONTAINERS FOR GRENADES, RIFLE	76-1-802			
10	PACKING AND MARKING OF BOX AND CARTON FOR GRENADES, RIFLE	20-4-502			

(a) COVERED BY CHEMICAL WARFARE SERVICE SPECIFICATION.
(b) ALTERNATIVE:- YELLOW NO. 316 GRADE I LACQUER ENAMEL (SPEC. NN-L-73) OR ENAMEL (SPEC. NN-E-
(C) COLOR NO. 316, COLOR CARD SUPPLEMENT TO SPEC. 3-1
(d) SPECIFICATION 50-0-1 AMMUNITION, EXCEPT SMALL ARMS AMMUNITION, GENERAL SPECIFICATION FOR, APPLIES.
(e) (SHIPPED SEPARATELY) THREE REQUIRED FOR EACH TEN COMPLETE ASSEMBLIES.

[redacted]

CLASSIFICATION CHANGED TO UNCLASSIFIED BY AUTHORITY OF OCM 20929 BY LT. COL., [signature] AUGUST 15, 1945

0 1 2 3 4 5 INCHES

GRENADE, RIFLE, SMOKE (COLORED) M22A1 ASSEMBLY

FEB. 25, 1944

REVISIONS

1	6-31-44
2	11-7-44
3	8-15-45
4	6-1-49

DRG. PERTAINS TO

CLASS	DIVISION	DRAWING	FILE
82	0	117	

TOLERANCE ON DIMENSIONS, NOT OTHERWISE SPECIFIED,
DECIMAL ±
FRACTIONAL ±
ANGULAR ±

D'FTSMAN EK | TRACED EK | ORDNANCE ENGINEER KL
CHECKER HG | S.C. | PRINCIPAL ENGINEER [illegible]

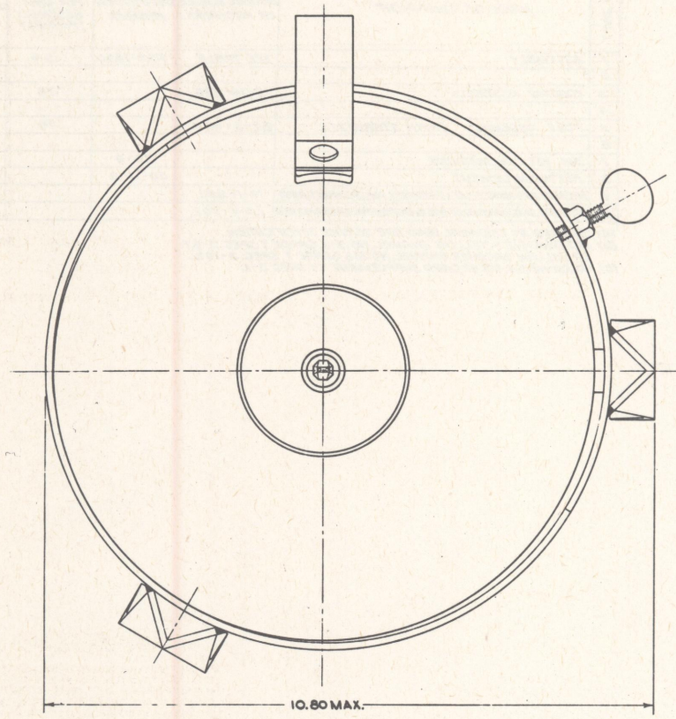
SUBMITTED: F. H. Heller, COL., ORD. DEPT., U.S.A.

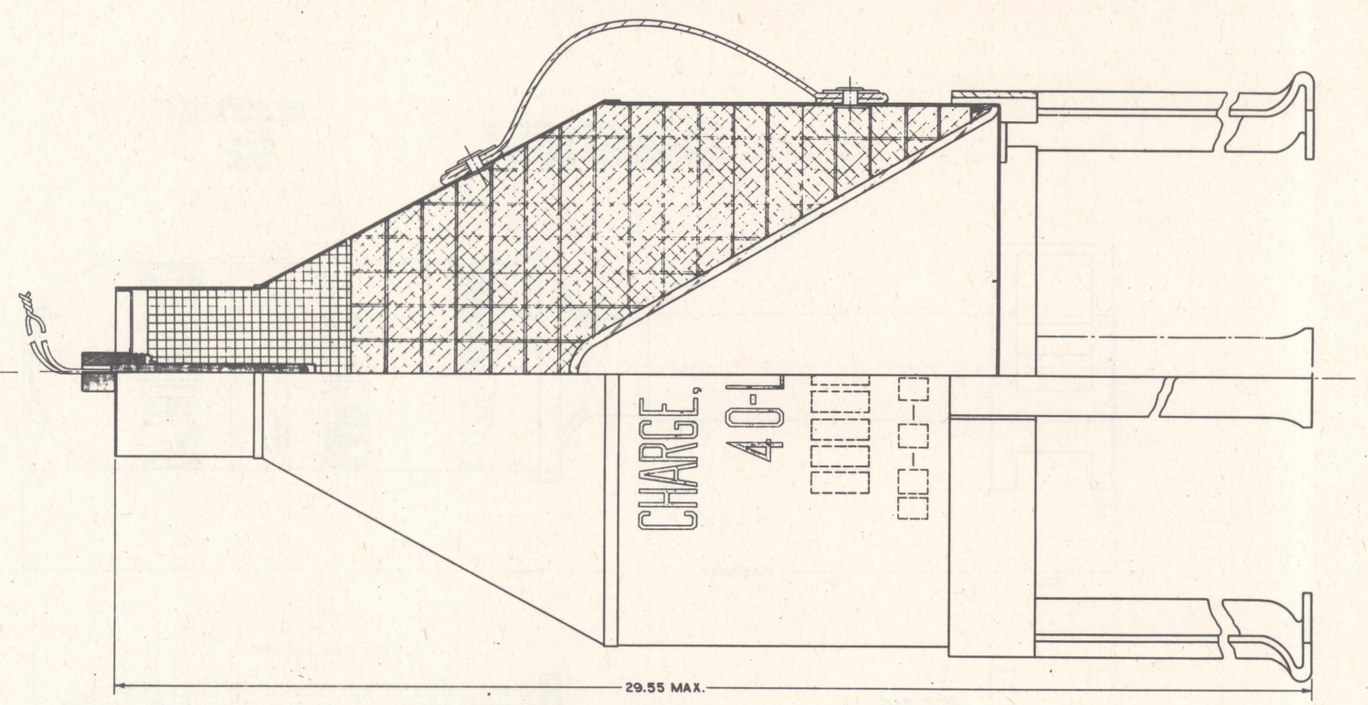
EXAMINED: [signature], COL., ORD. DEPT., U.S.A.

APPROVED BY ORDER OF THE CHIEF OF ORDNANCE: [signature], MAJ. GEN., ORD. DEPT., U.S.A.

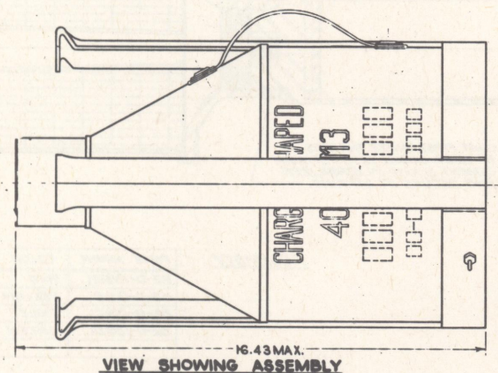
D

ORDNANCE DEPT., U.S.A.





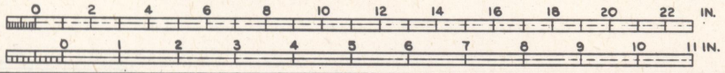
ASSEMBLY



VIEW SHOWING ASSEMBLY TELESCOPED FOR SHIPPING

CLASSIFICATION CHANGED TO UNCLASSIFIED BY AUTHORITY OF O.C.M. 25014 BY
LT. COL. [redacted] 9-7-44

[redacted]



LIST OF COMPONENTS, ETC.

LINE NO.	NAME OF COMPONENT	DRAWING NUMBER OR PIECEMARK	SPEC.	APPROX. WT. PER UNIT ASSEMBLY (POUNDS)	REMARKS
1	CHARGE SHAPED, 40-LB., M3, ASSEMBLY, COMPLETE	82-0-122			
2					
3	CHARGE SHAPED, 40-LB., M3, LOADING ASS'Y. & MARK. DIA.	82-13-2		43.46	
4					
5	CHARGE SHAPED, 40-LB., M3, METAL PARTS ASS'Y.	82-12-5		14.19	
6	DETONATOR ASSEMBLY.	82-13-88		.035	
7					
8	BOX, PACKING	76-16-430			
9					
10	PACKING AND MARKING OF PACKING BOX	20-4-511			
11					
12					
13					
14					
15					

CHARGE, SHAPED, 40-LB, M3. ASSEMBLY, COMPLETE.

JULY 10, 1944

REVISIONS			
1	9-7-44		
2	8-15-45		

DRG. PERTAINS TO

CLASS	DIVISION	DRAWING	FILE
82	O	122	

TOLERANCE ON DIMENSIONS NOT OTHERWISE SPECIFIED
DECIMAL ±
FRACTIONAL ±
ANGULAR ±

D'FTSMAN	TRACER	ORD. ENGINEER
F.W.K.	G.E.D.F.	AC
CHECKER		PRINCIPAL ENGINEER
G.L.P.	M.R.	

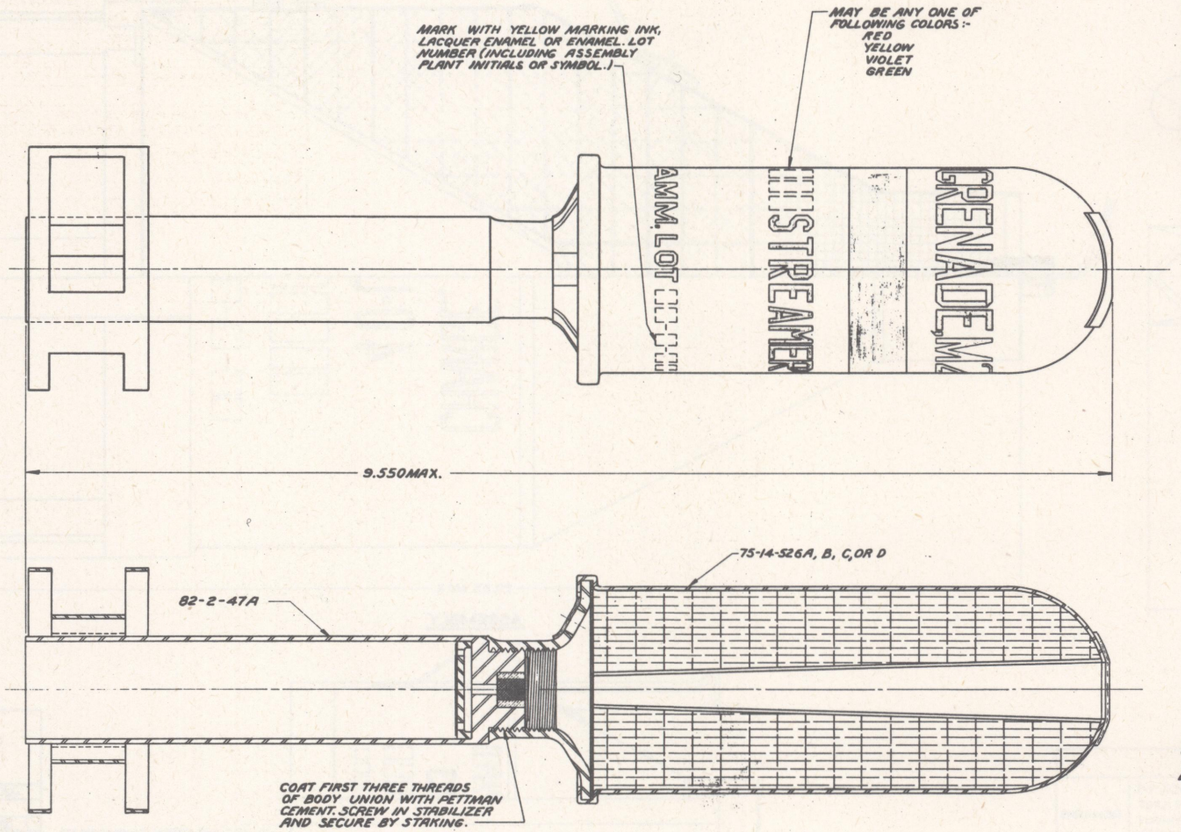
SUBMITTED:
[redacted]
LT. COL. ORD. DEPT. U.S.A.

EXAMINED:
[redacted]
COL. ORD. DEPT. U.S.A.

APPROVED BY ORDER OF THE CHIEF OF ORDNANCE:
By S. B. Kilgore
Col. O.D.
MAJ. GEN. ORD. DEPT. U.S.A.

D

ORDNANCE DEPT. U.S.A.



LIST OF COMPONENTS, ETC.

LINE NO.	NAME OF COMPONENT	DRAWING NUMBER OR PIECEMARK	SPECIFICATION NUMBER	APPROX. WEIGHT PER UNIT ASSEMBLY (POUNDS)	REMARKS
1	ASSEMBLY	SEE TABLE	AXS-1290	.94	
2					
3	LOADING ASSEMBLY	75-14-526		.76	(a)
4					
5	FUZE ASSEMBLY (WITH STABILIZER)	82-2-47A		.18	
6					
7	INK, YELLOW, MARKING		36-2		(b) (c)
8	PETTMAN CEMENT		50-11-8		
9	PACKING AND MARKING OF CONTAINERS FOR GRENADES, RIFLE	76-1-802			
10	PACKING AND MARKING OF BOX & CARTON FOR GRENADES, RIFLE	20-4-502			

(a) COVERED BY CHEMICAL WARFARE SERVICE SPECIFICATION.
(b) ALTERNATIVE :- YELLOW ENAMEL, NO. 315, GRADE I, SPEC. 3-67 OR YELLOW LACQUER ENAMEL, NO. 316, GRADE I, SPEC. 3-162.
(c) COLOR NO. 316, COLOR CARD SUPPLEMENT TO SPEC. 3-1.

ASSEMBLY

PIECE MARK	COLOR
82-0-139A1	RED
82-0-139B1	YELLOW
82-0-139C1	VIOLET
82-0-139D1	GREEN

CLASSIFICATION CHANGED TO UNCLASSIFIED BY AUTHORITY OF OCM 28152, BY LT. COL. [illegible] AUGUST 15, 1945

[redacted]

0 1 2 3 4 5 INCHES

#STANDARDIZED BY OCM 28152 JUNE 28, 1945

GRENADE, RIFLE, SMOKE, COLORED, STREAMER, M23 ASSEMBLY

APRIL 27, 1945

REVISIONS	
# 1	8-15-45

DRG. PERTAINS TO

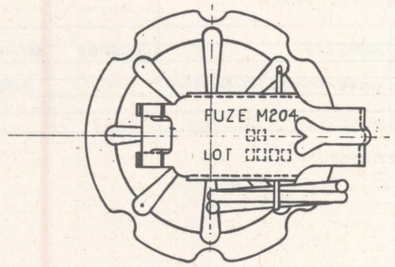
CLASS	DIVISION	DRAWING	FILE
82	0	139	

TOLERANCE ON DIMENSIONS NOT OTHERWISE SPECIFIED
DECIMAL ±
FRACTIONAL ±
ANGULAR ±

DETAILED W.R.T. ENGINEER
CHECKED ENGINEER
SUBMITTED- [illegible] LT. COL., ORD. DEPT. U.S.A.
EXAMINED- [illegible] LT. COL., ORD. DEPT. U.S.A.
APPROVED BY ORDER OF THE CHIEF OF ORDNANCE- C.S. Reed for LT. COL., ORD. DEPT. U.S.A.

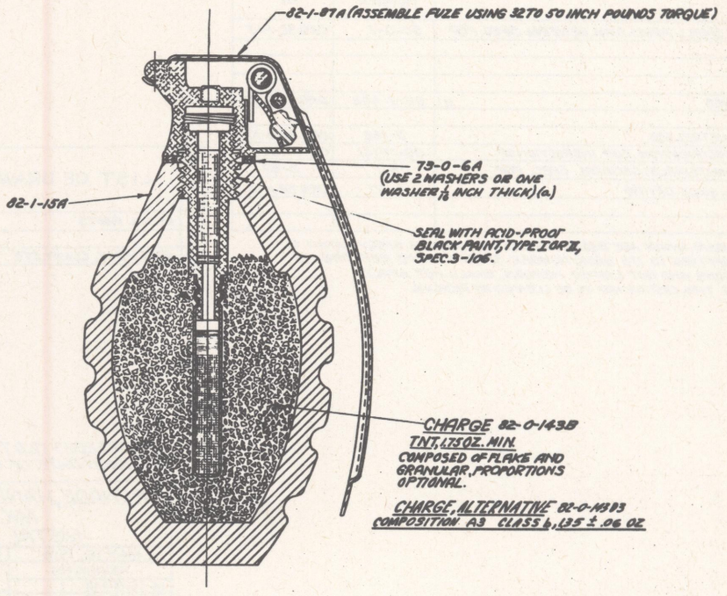
D

ORDNANCE DEPT., U.S.A.



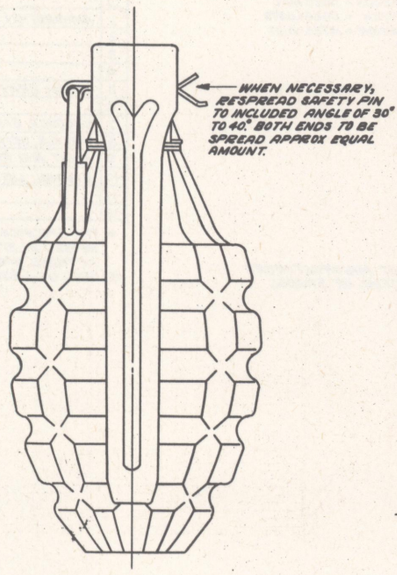
LIST OF COMPONENTS, ETC.

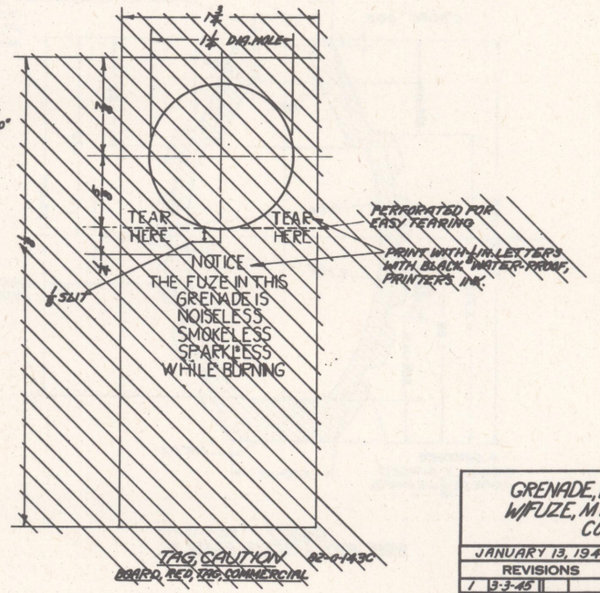
LAY-OUT NO.	NAME OF COMPONENT	DRAWING NUMBER	SPEC. NUMBER	APPROX. WT. PER COMPONENT	APPROX. GROSS WT. PER 1000 ASSEMBLIES	REMARKS
1	GRENADE, HAND, FRAG. MK. 2	82-0-143A	50-19-3	1.40 LB.		
2	BODY	82-1-15	99-J-652	1.06		
3	BOX, PACKING	76-1-522P	50-62-4			
4	CHARGE, ALTERNATIVE, COMP A3, CLASS 4	82-0-143D	AXS-768	.085		
5	CHARGE, TNT, FLAKE & GRANULAR	82-0-143B	50-13-5	.12		
6	CONTAINER, FIBER, M4141	PIF 18	50-61-3	.22		
7						
8	FUZE, GRENADE, HAND; M204	82-1-87A	AXS-1252	.22		
9						
10	PACKING & MARKING OF PACKING BOX	20-4-166	100-2			
11	PACKING & MARKING OF FIBER CONTAINER	76-14-210				
12	PAINT, ACID-PROOF, BLACK FOR ANM.		3-106.			
13						
14						
15	WASHER, FIBER, VULCANIZED	73-0-6A	AXS-643			



ASSEMBLY 82-0-143A2

(a) IF ONE WASHER IS USED, IT SHOULD BE SAME MATERIAL AS PCMK 73-0-6A.





SCALE 2/1

GRENADE, HAND, FRAG, MK2, W/FUZE, M204, ASSEMBLY COMPLETE

JANUARY 13, 1945

CLASS	DIVISION	DRAWING	FILE
82	0	143	

REVISIONS

1	3-3-45
2	8-1-45
3	8-15-45

TOLERANCE ON DIMENSIONS NOT OTHERWISE SPECIFIED
DECIMAL ±
FRACTIONAL ±
ANGULAR ±

DRG. PERTAINS TO

D'TSMAN J.R.T. CHECKED J.A.P. ENGINEER

CHECKER ENGINEER

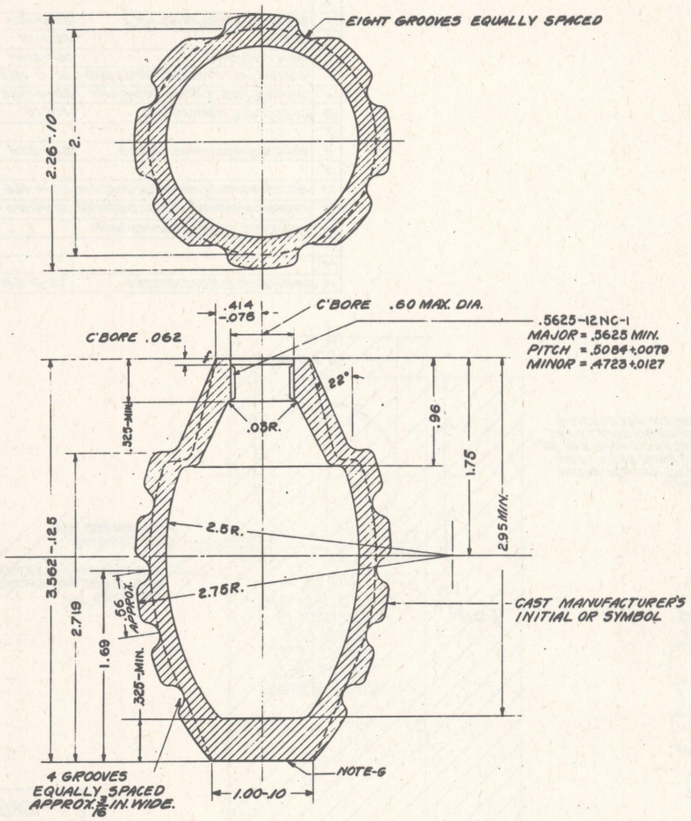
SUBMITTED: Q. M. Gallagher, LT. COL., ORD. DEPT. U. S. A.

EXAMINED: J. L. Christman, LT. COL., ORD. DEPT. U. S. A.

APPROVED BY ORDER OF THE CHIEF OF ORDNANCE: C. S. Reed, COL., ORD. DEPT. U. S. A.

D

ORDNANCE DEPT. U. S. A.



BODY 82-1-15A16
GRAY IRON CASTING, CLASS 30

NOTES:—

A—THE WALL THICKNESS OF THE GRENADE BODY SHALL BE NOT LESS THAN .127 INCHES.
MAKE ALL FILLETS AND RADII FOR BODY .125 MAX. RADIUS EXCEPT AS OTHERWISE SHOWN.
A TOLERACE OF ±.03 WILL BE ALLOWED ON ALL UNTOLERANCED DIMENSIONS

B—THE BODY OF THE GRENADE TO BE COATED WITH OLIVE DRAB LACQUER ENAMEL OR ENAMEL, WITH A 1/2-5/8 IN. WIDE STRIPE OF YELLOW LACQUER ENAMEL OR ENAMEL AROUND BODY NEXT TO FUZE SEAT AND VISIBLE WHEN THE FUZE IS ASSEMBLED INTO THE GRENADE.
A TRACE OF YELLOW ENAMEL IS PERMITTED ON THREADS FOR A DEPTH NOT EXCEEDING 1/4 INCH IF THREADS GAGE PROPERLY.

C—WEIGHT OF FINISHED BODY TO BE 1.05 ± .05 LBS.

D—THE BODY MUST SATISFACTORILY WITHSTAND 15 LBS. AIR PRESSURE, MAINTAINED FOR A MINIMUM OF 4 SECONDS WITHOUT LEAKING.

E—THE PLANE OF THE FACE MUST BE PERPENDICULAR TO THE AXIS OF THE THREADS. THE MAXIMUM IRREGULARITY ALLOWED IS .005 BETWEEN ANY TWO POINTS ON THE FACE WHEN MEASURED PARALLEL TO THE AXIS OF THREADS.

F—VOLUMETRIC CAPACITY OF BODY UP TO FUZE SEAT MUST NOT BE LESS THAN 67 C.C.

G—REMOVE ALL PROJECTIONS FROM BASE BY GRINDING OR MACHINING TO ACQUIRE AN 8 500 FINISH.

LIST OF PARTS

LINE NO.	NAME OF PART	NUMBER REQ'D PER COMPONENT	PIECEMARK	MATERIAL: SIZE OR FORM	MATERIAL: KIND	MATERIAL: GRADE	MATERIAL: SPEC. NO.	APPROXIMATE UNIT WEIGHT (POUNDS)	APPROX GROSS WT OF RAW STOCK PER 1000 ASSEMBLIES	REMARKS
1										
2	BODY	1	82-1-15A	CASTING	IRON, GRAY	CLASS 30	QQ-I-652	1.05		
3										
4					LACQUER ENAMEL, YELLOW AND O.D.	1	3-162			(a)
5										
6										

(a) ALTERNATIVE :- YELLOW AND OLIVE DRAB, ENAMEL, GRADE 1, SPEC. 3-67

LIST OF SPECIFICATIONS

LINE NO.		SPECIFICATION NUMBER *	REQUIRED BY
1	AMMUNITION EXCEPT SMALL ARMS AMM, GENERAL SPEC. FOR	50-0-1	DRG. 82-1-15
2			
3			
4			
5	IRON, GRAY CASTINGS (t)	QQ-I-652	DRG. 82-1-15
6			
7	LACQUER ENAMEL, LUSTRELESS.	3-162	DRG. 82-1-15
8	METALS, GENERAL SPECIFICATION FOR INSPECTION OF	QQ-M-151	QQ-I-652
9	PAINT AND RELATED MATERIALS: GENERAL SPEC. FOR	3-1	3-67
10	ENAMEL, LUSTRELESS, QUICK-DRYING	3-67	DRG. 82-1-15
11			
12			

* THE SPECIFICATION NUMBERS SHOWN ARE BASIC NUMBERS ONLY. WHEN A SPECIFICATION IS REVISED A LETTER IS AFFIXED TO ITS BASIC NUMBER. SPECIFICATIONS REFERRED TO IN THESE SPECIFICATIONS AND NOT LISTED HEREON, SHALL NOT APPLY.
(t) SPEC. QQ-I-652 EXCEPT THIS CASTING NOT TO BE CLEANED BY PICKLING.

LIST OF DRAWINGS

LINE NO.		DRAWING NUMBER
1	METAL PARTS	82-1-15
2		
3	ASSEMBLY, COMPLETE	82-0-41

SCALE, INCHES, 8

SUPERSEDES OLD TRACING 82-1-15 UNDER REVISION DATE OF OCTOBER 17, 1944

GRENADE, HAND, FRAGMENTATION MK. 2 METAL PARTS

MAY 16, 1918

REVISIONS

14	6-19-44	
15	10-17-44	
16	6-28-45	

DRG. PERTAINS TO 82-0-41

CLASS	DIVISION	DRAWING	FILE
82	1	15	

TOLERANCE ON DIMENSIONS NOT OTHERWISE SPECIFIED
DECIMAL ±
FRACTIONAL ±
ANGULAR ±

D'TSMAN G.E.W. | TRACER K.L.M. | ENGINEER | CHECKER | PHYSICAL ENGINEER

SUBMITTED:- L.T. COL., ORD. DEPT. U.S.A.

EXAMINED:- COL., ORD. DEPT. U.S.A.

APPROVED BY ORDER OF THE CHIEF OF ORDNANCE:- C.S. Reed by A.B. COL., ORD. DEPT. U.S.A.

D

ORDNANCE DEPT. U.S.A.

STAMP WITH 1/32 LETTERS AND FIGURES .01 DEEP DESIGNATION AND LOT NUMBER (INCLUDING INITIALS OR SYMBOL OF MANUFACTURER).
ALTERNATIVE:- MARK WITH BLACK MARKING INK OR STENCIL PAINT.
SAMPLE MARKING:-
FUZE, M6A4C, LOT □□-□-□□

IF FOIL DISC IS USED SECURE IT TO FUZE BODY WITH SHELLAC, VARNISH, ORANGE, TYPE II, MEDIUM BODY. DO NOT USE AN EXCESS AMOUNT.

82-1-61E
ASSEMBLE SPRING WITH ANGULAR DISPLACEMENT OF 430° APPROX.
82-1-61D
82-1-61G
82-1-61A
74-2-27A
82-1-61H
82-1-61F

SPREAD SAFETY PIN (30° ADVISORY) TO GIVE RESISTANCE TO WITHDRAWAL 10 LBS. MIN., 35 LBS. MAX.

.295-.010
.375 MAX.
SECTION A-A

CRIMP (MAY BE CHANGED PROVIDED ASSEMBLY FUNCTIONS SATISFACTORILY.)

82-1-47E
82-1-47D
A
A
.125-.030
2.87 MAX.
SEAL THIS JOINT THOROUGHLY WITH RED N.R.C. COMPOUND.
SEE ENLARGED VIEW.
82-1-61M
82-1-47H
OR 82-1-47M

ASSEMBLY (M6A4C) 82-1-31 B/2

.197 MAX.
60°
.01 R.
.05
.125
.205-.008

ENLARGED VIEW SHOWING DETONATOR ASSEMBLY CRIMPED TO DELAY ELEMENT.
SCALE 4/1

.48-.01

ALTERNATIVE METHOD OF SECURING DISC

PRESS DISC TO CONTOUR SHOWN USING SPECIAL PUNCH TO TRIM THE DISC TO .48-.01 DIA. EMBED THE DISC INTO THE SHOULDER OF THE FUZE BODY AND SEAL EDGE OF DISC WITH SHELLAC VARNISH, ORANGE, TYPE II, MEDIUM BODY.

SCALE 2/1

FOR PROTECTIVE FINISH SEE DRG. 82-1-82.

LINE NO.	LIST OF DRAWINGS	DRAWING NUMBER
1	ASSEMBLY	82-1-31
2	LIST OF PARTS & LIST OF SPECS.	82-1-82
3	DETAILS	82-1-47
4	DETAILS	82-1-61
5	PRIMER, MK. II, ASSEMBLY	74-2-27
6	CARTON, PACKING	75-16-190
7	BOX, PACKING	75-1-355
8	PACKING AND MARKING OF BOX	20-6-170
9		
10		

WITH NEW TRACING 82-1-82
SUPERSEDES OLD TRACING 82-1-31
UNDER REVISION DATE OF MARCH 1, 1943

FUZE, HAND GRENADE, M6A4C ASSEMBLY.

NOVEMBER 7, 1918

REVISIONS			
8	2-28-42		
9	6-25-42		
10	3-1-43		
11	3-15-44		
12	5-31-44		
13	4-1-48		

DRG. PERTAINS TO

CLASS	DIVISION	DRAWING	FILE
82	1	31	

TOLERANCE ON DIMENSIONS NOT OTHERWISE SPECIFIED
DECIMAL ±
FRACTIONAL ± -
ANGULAR ±

DFTSMAN	TRACER	ENGINEER
J.J.G.	J.J.G.	
CHECKER	O.C.	ENGINEER
J.B.		

SUBMITTED:
Lt. Col., ORD. DEPT. U.S.A.
EXAMINED:
Lt. Col., ORD. DEPT. U.S.A.
APPROVED BY ORDER OF THE CHIEF OF ORDNANCE:
COL., ORD. DEPT. U.S.A.

D.

ORDNANCE DEPT. U.S.A.

OBSOLESCENT

LIST OF PARTS

LINE NUMBER	NAME OF PART	NUMBER REQ'D PER COMPONENT	PIECE MARK	MATERIAL: SIZE OR FORM	MATERIAL: KIND	MATERIAL: GRADE	MATERIAL: SPEC. NUMBER	APPROXIMATE UNIT WEIGHT (LBS)	APPROX. GROSS WT. OF RAW STOCK PER 1000 ASSEMBLIES	REMARKS
1										
2	ASSEMBLY, BODY, OGIVE AND CONE		82-1-76A					.51		
3										
4										
5	ASSEMBLY, BODY AND UNION		82-1-76B					.30		
6										
7										
8	ASSEMBLY, STABILIZER	1	82-1-77A					.46		
9	ASSEMBLY, STABILIZER (ALTERNATIVE)		82-1-77B					.46		
10										
11										
12										
13	BODY	1	82-1-76C	SHEET	STEEL, COLD ROLLED, ANNEALED	WD. 1010 OR 1015	57-136			(a)
14	BODY (ALT.)		82-1-76L	SHEET	STEEL, COLD ROLLED, ANNEALED	WD. 1010 OR 1015	57-136			(a)
15										
16										
17	CONE	1	82-1-76E	SHEET	STEEL, COLD ROLLED, ANNEALED	WD. 1010 OR 1015	57-136	.07		(a)
18										
19										
20	CUP, BOOSTER	1	82-1-76G	ROD	BRASS	"B" HALF HARD	QQ-B-611	.01		(c)
21										
22										
23	DISC, DETONATOR CUP RETAINING	1	82-1-76H	SHEET	ALUMINUM	TYPE 1 OR 2 ANY CLASS	QQ-A-561			
24										
25										
26										
27										
28										
29										
30	OGIVE	1	82-1-76F	SHEET	STEEL, COLD ROLLED, ANNEALED	WD. 1010 OR 1015	57-136	.13		(a)
31										
32										
33										
34										
35										
36										
37	UNION, BODY	1	82-1-76D	BAR	STEEL, COLD DRAWN	WD 1020, WDX 1314 OR WDX 1313	57-107			
38										
39										
40										
41					LACQUER ENAMEL, OLIVE DRAB	I	3-162			(b)
42										
43										
44					PAINT, ACID-PROOF BLACK	TYPE I OR II	3-106			
45					PUTTY, GLAZING	DUPONT OR EQUIV.	COMMERCIAL			
46										
47										
48										
49					OIL, LUBRICATING, PRESERVATIVE	SPECIAL	2-120			
50										
51										
52										
53										
54										
55										
56										
57										
58										
59										
60										
61										
62										
63										
64										
65										
66										
67										

(c) - ALTERNATIVE MATERIAL :- ALUMINUM-BASE-ALLOY; DIE CASTINGS, CLASS 5, SPEC. AXS-679.

LIST OF SPECIFICATIONS

LINE NO.	LIST OF SPECIFICATIONS	SPECIFICATION NUMBER *	REQUIRED BY
1			
2	ALUMINUM, PLATES AND SHEETS	QQ-A-561	DRG. 82-1-76
3	ALUMINUM-BASE-ALLOY, DIE CASTINGS	AXS-679	DRG. 82-1-76
4			
5	BRASS COMMERCIAL BARS, PLATES, RODS, SHAPES, SHEETS, AND STRIPES	QQ-B-611	DRG. 82-1-76
6			
7	GRENADE, AT. M9A1., METAL PARTS FOR	AXS-653	DRG. 82-1-76
8	CLEANING AND PREPARATION OF METAL SURFACES	AXS-1245	DRG. 82-1-76
9	LACQUER, ENAMEL, LUSTRELESS	3-162	DRG. 82-1-76
10	ENAMEL, LUSTRELESS, QUICK DRYING	3-67	DRG. 82-1-76
11			
12	METAL, GENERAL SPECIFICATIONS FOR INSPECTING	QQ-M-151	DRG. 82-1-76
13			
14	OIL, LUBRICATING, PRESERVATIVE, SPECIAL	2-120	DRG. 82-1-76
15	PAINT, ACID-PROOF, BLACK, FOR AMMUNITION	3-106	DRG. 82-1-76
16			
17	PAINTS AND RELATED MATERIALS, GENERAL SPEC. FOR,	3-1	3-162
18	SHELLAC	TT-V-91	DRG. 82-1-76
19			
20			
21	STEEL BAR CARBON AND ALLOY	57-107	DRG. 82-1-76
22	STEEL, SHEET AND STRIP, CARBON AND ALLOY	57-136	DRG. 82-1-76
23			
24			
25			
26			
27			
28			
29			
30			
31			
32			
33			
34			
35			
36			
37			
38			
39			
40			
41			
42			
43			

* THE SPECIFICATION NUMBERS SHOWN ARE BASIC NUMBERS ONLY. WHEN A SPECIFICATION IS REVISED A LETTER IS AFFIXED TO ITS BASIC NUMBER. SPECIFICATIONS REFERRED TO IN THESE SPECIFICATIONS AND NOT LISTED HEREON, SHALL NOT APPLY.

(a) ALTERNATIVE MATERIAL :- SHEET STEEL, WD. 1010 OR WD. 1015, HOT ROLLED, ANNEALED, PICKLED, SPEC. 57-136.
(b) ALTERNATIVE MATERIAL :- ENAMEL, OLIVE DRAB, [redacted] GRADE I, SPEC. 3-67.

CLASSIFICATION CHANGED TO RESTRICTED BY AUTHORITY OF ORDNANCE DEPT. ORDER NUMBER 43-44 BY LT. COL. [signature] DATED OCT 21, 1944

LINE NO.	LIST OF DRAWINGS	DRAWING NUMBER
1	LIST OF METAL PARTS AND SPEC.	82-1-75
2	METAL PARTS DETAILS	82-1-76
3	STABILIZER ASSEM. LIST OF PARTS & SPEC.	82-1-77
4	METAL PARTS, DETAILS	82-1-78
5		
6		

GRENADE, RIFLE, AT. M9A1
LIST OF METAL PARTS AND LIST OF SPECIFICATIONS

APRIL 14, 1942

REVISIONS
1 3-31-43
2 10-27-44
3 8-15-45

DRG. PERTAINS TO

D.

CLASS	DIVISION	DRAWING	FILE
82	1	75	

SYMBOL

D'FTSMAN G.T.F | TRACER G.T.F | LDG D'FTSMAN Q.C. Neal
CHECKER T.F.C. | CHECKER T.J. | CHIEF D'FTSMAN [signature]

SUBMITTED:- [signature] MAJOR, ORD. DEPT. U.S.A.

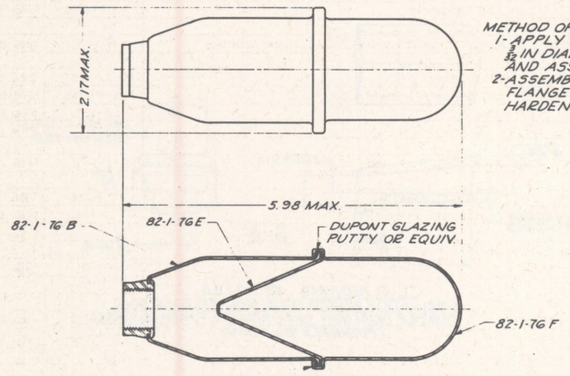
EXAMINED:- [signature] LT. COL., ORD. DEPT. U.S.A.

APPROVED:- [signature] COL., ORD. DEPT. U.S.A.

ORDNANCE OFFICE, WAR DEPT.

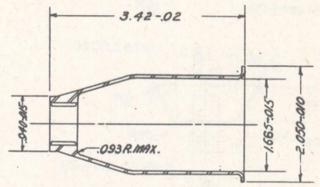
NOTES:-
1. RETOUCH EXTERIOR SURFACE WHERE NECESSARY (EXCEPT REAR END OF BODY) WITH LACQUER ENAMEL, OLIVE DRAB.
2. REAR END SURFACE OF BODY MAY SHOW TRACES OF PAINT USED ON EXTERIOR SURFACE OF BODY.

METHOD OF ASSEMBLY:-
1- APPLY A RIBBON OF GLAZING PUTTY APPROXIMATELY $\frac{3}{32}$ IN DIAMETER AROUND THE FLANGE OF THE CONE AND ASSEMBLE TO BODY.
2- ASSEMBLE OGIVE TO BODY AND CONE. CLINCH OGIVE FLANGE SECUREELY TO BODY BEFORE GLAZING PUTTY HARDENS.



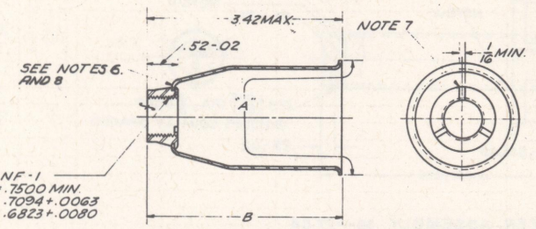
CLINCH 360° (EXCEPT FOR NECESSARY CLEARANCE BETWEEN CLINCHING JAWS IF CLINCHED IN DIE)

BODY, OGIVE AND CONE ASSEMBLY 82-1-7GA4



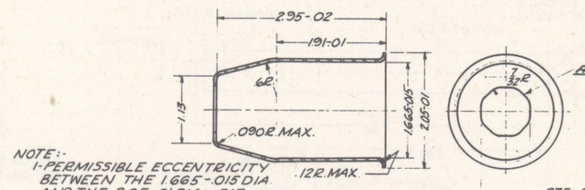
BODY (ALTERNATIVE) 82-1-7GL5

.062 ± .005 STEEL, SHEET, WD. 1010 OR WD. 1015, COLD ROLLED, ANNEALED (DULL OR REG. BRIGHT FINISH).
ALTERNATIVE:- STEEL, WD. 1010 OR WD. 1015, HOT ROLLED, ANNEALED, PICKLED.
(FOR ADDITIONAL INFORMATION SEE 82-1-7GB, 82-1-7GC AND 82-1-7GD).



BODY AND UNION ASSEMBLY 82-1-7GB6

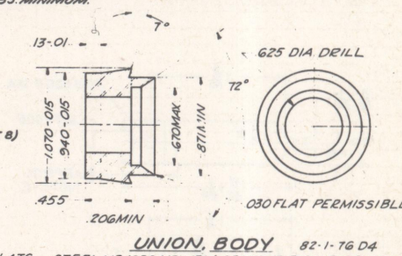
NOTES:-
1. PERMISSIBLE ECCENTRICITY (BODY & UNION ASSEMBLY) BETWEEN THREADS & 1.665 INTERIOR SURFACE, .015.
2. ALL MACHINING TO BE DONE AFTER ASSEMBLY OF UNION.
3. WEIGHT:- 139 GRAMS ±11 GRAMS.
4. COAT INTERIOR SURFACES (EXCEPT THREADS) & ONE SIDE OF END FLANGE, WITH ACID-PROOF BLACK PAINT, TYPE I OR II AS SHOWN BY DIMENSION 'A'.
5. COAT EXTERIOR SURFACES (EXCEPT REAR END) WITH LACQUER ENAMEL OR ENAMEL, OLIVE DRAB, AS SHOWN BY DIMENSION 'B'. (REAR END SURFACES MAY SHOW TRACES OF ENAMEL. NOPTIONAL)
6. APPLY ACID PROOF BLACK PAINT OR SHELLAC TO JOINT AND CLINCH BEFORE DRYING (OPTIONAL).
7. COIN MINIMUM OF THREE RADIAL SLOTS, EQUALLY SPACED, IN BODY UNION TO VENT ANNULAR VOLUME DURING LOADING.
8. WHEN DESIGN OF OPENING OTHER THAN ADVISORY DESIGN IS USED, JOINT MUST BE CAPABLE OF WITHSTANDING A TORQUE OF 7 FT. LBS. MINIMUM.



NOTE:-
1- PERMISSIBLE ECCENTRICITY BETWEEN THE 1.665"-.015 DIA AND THE 2.05-.01 DIA., .015

BODY 82-1-7GC6

.062 ± .005 STEEL, SHEET, WD. 1010 OR WD. 1015, COLD ROLLED, ANNEALED, (DULL OR REG. BRIGHT FINISH)
ALTERNATIVE MATERIAL:- STEEL, WD. 1010 OR WD. 1015, HOT ROLLED, ANNEALED, PICKLED.

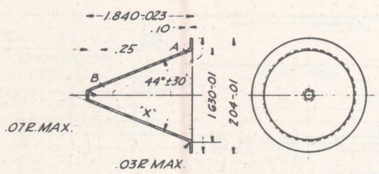


UNION, BODY 82-1-7GD4

STEEL, WD. 1020, NDX 1314 OR NDX 1315, COLD DRAWN FINISH F.
(REDRILL & TAP AFTER ASSEMBLY TO BODY.)

NOTE:- WHERE NO TOLERANCES ARE SPECIFIED, DIMENSIONS ARE ADVISORY, PROVIDED DIMENSIONS OF ASSEMBLY 82-1-7GB ARE MET.

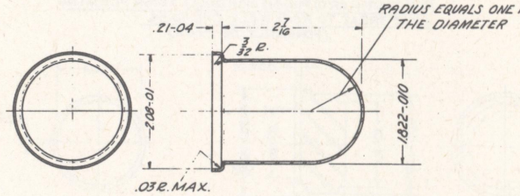
NOTES:-
1. PERMISSIBLE ECCENTRICITY BETWEEN FLANGE AND OUTSIDE SURFACE OF CONE .010
2. BETWEEN POINTS A AND B, WALL THICKNESS MAY VARY NOT MORE THAN .004 WHEN CHECKED AT NOT LESS THAN FOUR POINTS APPROXIMATELY 90° APART.
4. WEIGHT LIMITS 32 GRAMS, +0-4 GRAMS.
5. COAT INTERIOR AND EXTERIOR SURFACES WITH ACID-PROOF BLACK PAINT, TYPE I OR II. ALTERNATIVE:- COAT INTERIOR SURFACE WITH LACQUER ENAMEL OR ENAMEL, OLIVE DRAB, AS SHOWN BY DIM. 'X' AND EXTERIOR SURFACE WITH ACID-PROOF BLACK PAINT, TYPE I OR II.



CONE 82-1-7GE4

STEEL, SHEET, WD 1010 OR WD 1015, COLD ROLLED, ANNEALED, (DULL OR REG. BRIGHT FINISH)
ALTERNATIVE MATERIAL:- STEEL, SHEET, WD 1010 OR WD 1015, HOT ROLLED, ANNEALED, PICKLED.
ADVISORY METAL THICKNESS .036

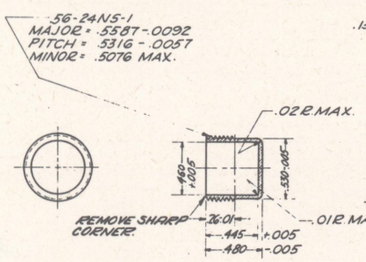
NOTES:-
1. TOLERANCE ON ALL FRACTIONAL DIMENSIONS ± 1/64.
2. COAT INTERIOR AND EXTERIOR SURFACES WITH LACQUER ENAMEL OR ENAMEL, OLIVE DRAB. ALTERNATIVE:- COAT EXTERIOR SURFACE WITH LACQUER ENAMEL OR ENAMEL, OLIVE DRAB, AND INTERIOR SURFACE WITH ACID-PROOF BLACK PAINT, TYPE I OR II.



OGIVE 82-1-7GF6

.031 STEEL, SHEET, WD 1010 OR WD 1015, COLD ROLLED, ANNEALED, (DULL OR REG. BRIGHT FINISH)
ALTERNATIVE MATERIAL:- .031 STEEL, SHEET, WD 1010 OR WD 1015, HOT ROLLED, ANNEALED, PICKLED.

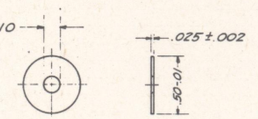
NOTE:-
1. PERMISSIBLE ECCENTRICITY BETWEEN .460 DIA. INTERIOR SURFACE AND .530 DIA. EXTERIOR SURFACE, .005



DISC, DETONATOR 82-1-7GH5

CUP, RETAINING

ALUMINUM, TYPE 1 OR 2, ANY CLASS



CUP, BOOSTER 82-1-7GG6

COMMERCIAL BRASS ROD, COMPOSITION 'B', HALF HARD.
FINISH 'F'
ALTERNATIVE MATERIAL:- ALUMINUM BASE ALLOY, DIE CASTING, CLASS 5.

CLASSIFICATION CHANGED TO RESTRICTED BY AUTHORITY OF ORDNANCE DEPT. ORDER NO. 43-44 BY LT. COL. A. M. Gallagher
APRIL 24, 1944

REMOVE ALL BURRS.

SCALE, INCHES. 1/1, 2/1

GRENADE, RIFLE, AT, M9A1
METAL PARTS, DETAILS

APRIL 14, 1942	CLASS	DIVISION	DRAWING	FILE
REVISIONS	82	1	76	

1	11-8-42
2	3-31-43
3	4-24-44
4	9-9-44
5	1-25-45
6	8-15-45

TOLERANCE ON DIMENSIONS NOT OTHERWISE SPECIFIED
DECIMAL ±
FRACTIONAL ±
ANGULAR ±

DRAFTSMAN: C.P.D. RAHN | TRACER: Jean Nash | ENGINEER: J.C. Hook
CHECKER: T.J. | TRACEABLE:

DRG. PERTAINS TO

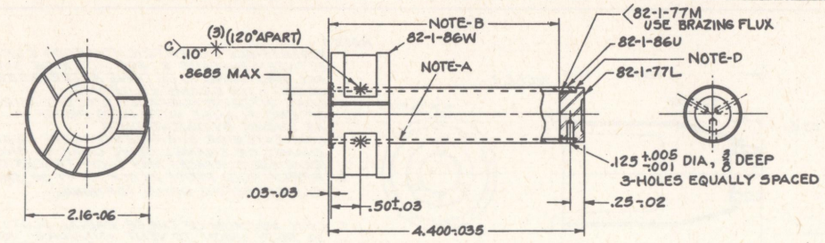
SUBMITTED: Wm. Gallagher, MAJOR, ORD. DEPT. U.S.A.

EXAMINED: W. W. Keller, LT. COL. ORD. DEPT. U.S.A.

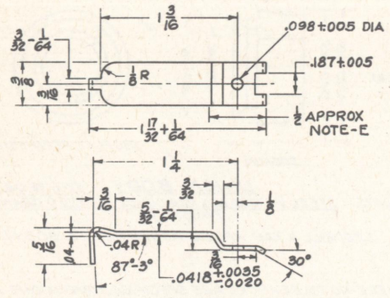
APPROVED BY ORDER OF THE CHIEF OF ORDNANCE: J. H. Wilson, COL., ORD. DEPT. U.S.A.

D

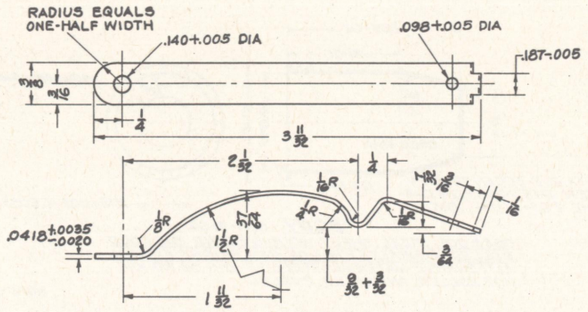
ORDNANCE DEPT., U.S.A.



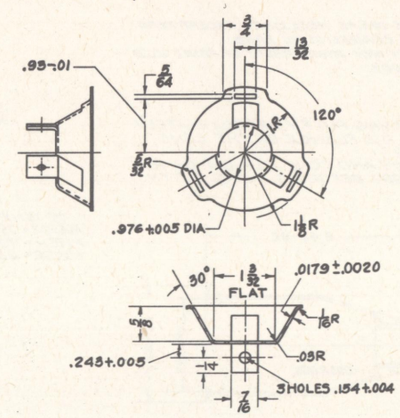
STABILIZER ASSEMBLY 82-1-77 C8



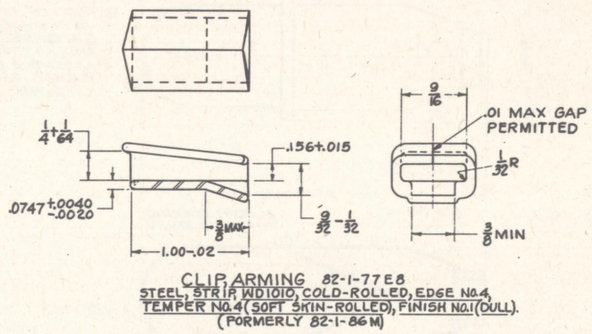
RETAINER, ARMING CLIP 82-1-77F8
STEEL, STRIP, WD1075, COLD-ROLLED, TEMPER NO.3 (QUARTER-HARD), FINISH NO.1 (DULL). AFTER FORMING HEAT TREAT TO ROCKWELL C60 TO 64.
(FORMERLY 82-1-86N)



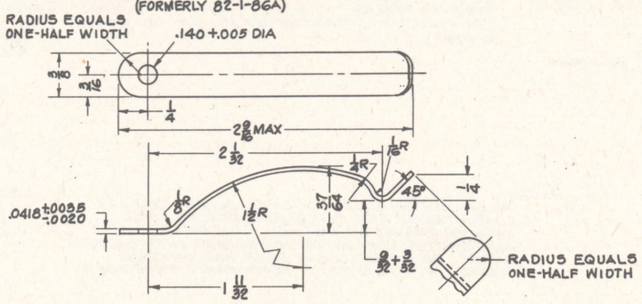
CLAW, LONG 82-1-77G8
STEEL, STRIP, WD1075, COLD-ROLLED, TEMPER NO.3 (QUARTER-HARD), FINISH NO.1 (DULL). AFTER FORMING HEAT TREAT TO ROCKWELL C48 TO 54.
(FORMERLY 82-1-86S)



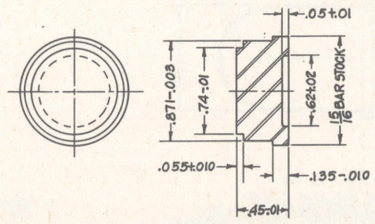
CUP, RETAINER 82-1-77D8
STEEL, SHEET, WD1010, COLD-ROLLED TEMPER NO.4 (SOFT SKIN-ROLLED), FINISH NO.1 (DULL).
(FORMERLY 82-1-86A)



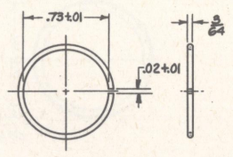
CLIP, ARMING 82-1-77E8
STEEL, STRIP, WD1010, COLD-ROLLED, EDGE NO.4, TEMPER NO.4 (SOFT SKIN-ROLLED), FINISH NO.1 (DULL).
(FORMERLY 82-1-86M)



CLAW, SHORT 82-1-77H8
STEEL, STRIP, WD1075, COLD-ROLLED, TEMPER NO.3 (QUARTER-HARD), FINISH NO.1 (DULL). AFTER FORMING HEAT TREAT TO ROCKWELL C48 TO 54.
(FORMERLY 82-1-86K)



PLUG 82-1-77L8
STEEL, F5X1314, COLD-DRAWN
FINISH 125



RING, BRAZING 82-1-77M8
SOLDER, SILVER, CLASS 4

NOTES:-
A - INSIDE OF TUBE MUST BE FREE FROM WELD BURRS. TUBE MAY BE BROACHED WITH BUTTON BROACH HAVING .868 INCH DIAMETER, MAXIMUM.
B - A PLUG GAGE .8648 DIAMETER MUST FREELY ENTER TUBE TO DEPTH INDICATED.
C - FOR WELDING SYMBOLS SEE LIST OF PARTS.
D - UPON COMPLETION OF THE BRAZING OPERATION, BRAZING METAL MUST BE VISIBLE IN AT LEAST 75% OF THE PERIPHERY OF THE OUTSIDE JOINT.
E - THIS DISTANCE MUST BE TEMPERED TO HARDNESS OF ROCKWELL C40 TO 50.

NOTICE:- THIS DRAWING SHALL NOT BE USED OR REPRODUCED EITHER WHOLLY OR IN PART EXCEPT WHEN AUTHORIZED IN CONNECTION WITH UNITED STATES GOVERNMENT PROCUREMENT.

SUPERSEDES 82-1-77 AND 82-1-86 (IN PART) WITH CHANGE JUNE 1, 1949.

REMOVE ALL BURRS

SCALE, INCHES, 1, 1/2, 3/4

FOR ALTERNATIVE MATERIALS SEE LIST OF PARTS

ADAPTER, GRENADE, PROJECTION, M14A2 DETAILS

	CLASS 82	DIVISION 1	SUB. CL. 77
PHYSICAL PROPERTIES	DRAWING PERTAINS TO 82-1-81		
ORIGINAL DATE OF DRAWING APRIL 14, 1942			
8 6-1-49			
	SCALE	W&I	R.H.D.
		CCO	W&I
	TOLERANCES UNLESS OTHERWISE SPECIFIED .003 .007	ORD ENGR.	
		CHIEF, ENGR. BR.	C.R. Dutton COL.
		CHIEF ENGR.	C.R. Dutton COL.
	D		

LIST OF PARTS

LINE NO.	NAME OF PART	NUMBER REQ'D PER COMPONENT	PIECE-MARK	MATERIAL: SIZE OR FORM	MATERIAL: KIND	MATERIAL: GRADE	MATERIAL: SPEC. NUMBER	APPROXIMATE UNIT WEIGHT (POUNDS)	APPROX. GROSS WT. OF RAW STOCK PER 1000 ASSEMBLIES	REMARKS
1	ASSEMBLY		82-1-77A					.46		
2	BODY, FUZE	1	82-1-78A	BAR	STEEL, COLD DRAWN	WDX13/4 OR WDX13/5	57-107	.23		(pa)(a)
3	HOLDER, DETONATOR	1	82-1-78C	ROD	BRASS	B-HALF HARD	QQ-B-611	.016		
4	FIN	3	82-1-78G	SHEET	STEEL, COLD ROLLED NO2 OR 3 TEMPER	WD1010 OR WD1015	57-136	.057		
5	FIN (ALTERNATIVE)		82-1-78L	SHEET	STEEL, COLD ROLLED NO2 OR 3 TEMPER	WD1010 OR WD1015	57-136			
6	FIN (ALTERNATIVE)		82-1-86F	SHEET	STEEL, COLD ROLLED NO2 OR 3 TEMPER	WD1010 OR WD1015	57-136			
7										
8										
9	PIN, FIRING	1	82-1-78D	ROD	STEEL, COLD DRAWN	WDX13/4 OR WDX13/5	57-107	.02		(c)(pa)
10	PIN, SAFETY	1	82-1-78B	WIRE	STEEL, MUSIC SPRING	WD1085	48-18	.005		(pa)
11										
12	SCREW, STAB. TUBE TO FUZE BODY	4	82-1-78K		STEEL, NO4 x 3/8 R.HD. HARDENED METALLIC DRIVE SCR.		COMMERCIAL	.009		(e)(g)
13	SPRING, FIRING PIN	1	82-1-78H	WIRE	STEEL, MUSIC SPRING	WD1085	48-18	.2 GRAM		(pb)
14										
15	TUBE, STABILIZER	1	82-1-78F	TUBING	STEEL, COLD DRAWN TYPE I	WD1010 OR WD1020	57-180	.12		(a)(b)
16	TUBE, STABILIZER (ALTERNATIVE)		82-1-78N	TUBING	STEEL, CUPPED AND DRAWN	WD1020	57-180			
17										
18										
19										
20	ASSEMBLY (ALTERNATIVE)		82-1-77B					.46		(r)
21	BODY, FUZE (ALTERNATIVE)		82-1-78M	BAR	STEEL, COLD DRAWN	WDX13/4 OR WDX13/5	57-107	.23		(pa)(h)
22										
23										
24					VARNISH, PHENOLIC, BAKED (UN-PIGMENTED)		AXS-736			
25					LACQUER. ENAMEL, OLIVE DRAB	I	3-162			(d)
26					OIL, LUBRICATING, PRESERVATIVE, SPECIAL		2-120			
27					INK, MARKING, BLACK		36-2			
28										
29										
30										

(a) ALTERNATIVE:- STEEL TUBING, WD1010, WD1020 OR WD1025 TYPE III (ELECTRIC RESISTANCE WELDED) COLD DRAWN, ANNEALED IMMEDIATELY PRECEDING FINAL COLD DRAW. SPEC. 57-180 (EXCEPT MIN. ELONGATION IN TWO INCHES TO BE NOT LESS THAN 10%) MIN. TENSILE STRENGTH 70,000 LBS. P.S.I.
(b) ANNEALED IMMEDIATELY PRECEDING FINAL COLD DRAW.
(c) ALTERNATIVE:- STEEL, WDX1335 OR WD1020 TO WD1040.
(d) ALTERNATIVE:- ENAMEL, OLIVE DRAB, GRADE I, SPEC. 3-67.
(e) ALTERNATIVE:- EQUIVALENT SELF-TAPPING SCREW, COMMERCIAL.
(f) NOT REQUIRED WHEN ALTERNATIVE FUZE BODY (82-1-78M) IS USED.
(h) ALTERNATIVE:- BAKED PHENOL VARNISH (SEE NOTE ON 82-1-78A).
(p) PROTECTIVE FINISHES, SPEC. 57-0-2.
(pa) TYPE I, CLASS RSC OR TS.
(pb) TYPE I, CLASS TS.
(r) ALL PARTS LISTED EXCEPT FUZE BODY 82-1-78M, REQUIRED ON EITHER ASSEMBLY.

LIST OF SPECIFICATIONS

LINE NO.	LIST OF SPECIFICATIONS	SPECIFICATION NUMBER *	REQUIRED BY
1	AMMUNITION, EXCEPT SMALL ARMS AMMUNITION, GENERAL SPEC. FOR	50-0-1	DRG. 82-1-77
2	BRASS COMMERCIAL BARS, PLATES, RODS, SHAPES, SHEETS AND STRIPS	QQ-B-611	DRG. 82-1-78
3			
4	CLEANING AND PREPARATION OF METAL SURFACES	AXS-1245	DRG. 82-1-78
5			
6	ENAMEL, LUSTRELESS, QUICK DRYING	3-67	DRG. 82-1-78
7			
8	FINISH, PROTECTIVE, FOR IRON AND STEEL PARTS	57-0-2	DRG. 82-1-77
9			
10	INK, MARKING (FOR AMMUNITION)	36-2	DRG. 82-1-77
11	LACQUER, ENAMEL, LUSTRELESS	3-162	DRG. 82-1-78
12	METAL, GENERAL SPECIFICATION FOR INSPECTION OF	QQ-M-151	DRG. 82-1-78
13			
14	OIL, LUBRICATING. PRESERVATIVE, SPECIAL	2-120	DRG. 82-1-77
15	PAINTS AND RELATED MATERIALS, GENERAL SPECIFICATION FOR	3-1	3-162
16			
17	STEEL, BAR CARBON AND ALLOY	50-107	DRG. 82-1-78
18	STEEL, SHEET AND STRIP, CARBON AND ALLOY	57-136	DRG. 82-1-78
19			
20	TUBE, STRUCTUAL STEEL, CARBON AND ALLOY, WELDED AND SEAMLESS	57-180	DRG. 82-1-78
21			
22	VARNISH, PHENOLIC BAKED (UNPIGMENTED)	AXS-736	DRG. 82-1-78
23			
24	WIRE, MUSIC	48-18	DRG. 82-1-78
25			

* THE SPECIFICATION NUMBERS SHOWN ARE BASIC NUMBERS ONLY. WHEN A SPECIFICATION IS REVISED A LETTER IS AFFIXED TO ITS BASIC NUMBER. SPECIFICATIONS REFERRED TO IN THESE SPECIFICATIONS AND NOT LISTED HEREON, SHALL NOT APPLY.

WITH 82-1-77 SUPERSEDES 82-1-77 WITH CHANGE APRIL 6, 1945.

STABILIZER ASSEMBLY, GRENADE AT AND RIFLE. LIST OF PARTS AND LIST OF SPECIFICATIONS

APRIL 6, 1945
REVISIONS

DRG. PERTAINS TO

CLASS	DIVISION	DRAWING	FILE
82	1	77A	

TOLERANCE ON DIMENSIONS NOT OTHERWISE SPECIFIED
DECIMAL ±
FRACTIONAL ±
ANGULAR ±

D'FTSMAN W.H.A. TRACER C.W.F. ENGINEER
CHECKER H.H. C.O. HEAD, ENGINEER

SUBMITTED:
47 COL, ORD DEPT. U.S.A.

EXAMINED:
47. COL, ORD. DEPT. U.S.A.

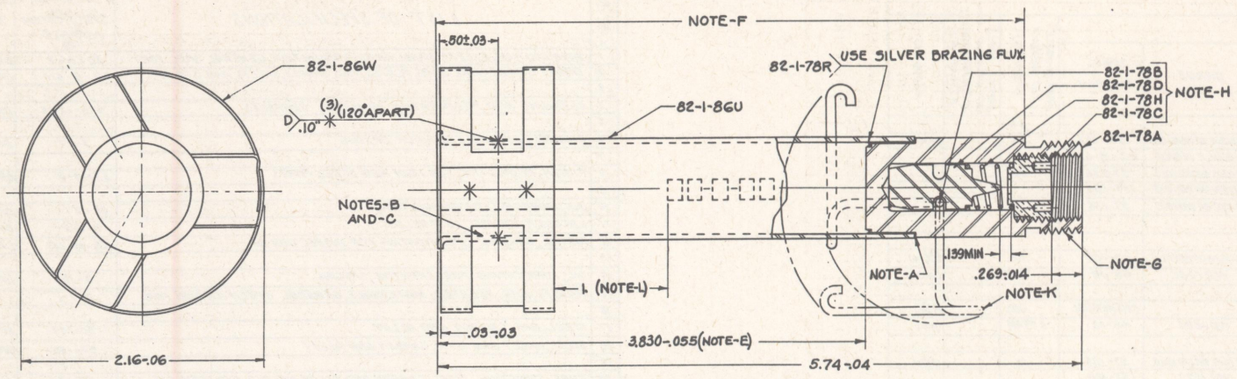
APPROVED BY ORDER OF THE CHIEF OF ORDNANCE:
C.S. Reed
COL, ORD. DEPT. U.S.A.

D

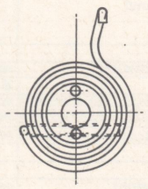
ORDNANCE DEPT., U.S.A.

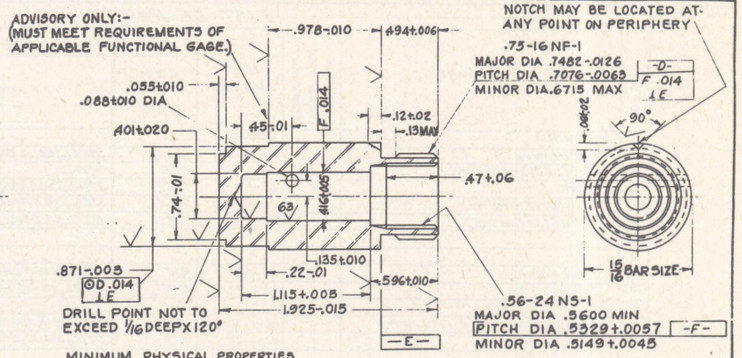
ORDNANCE DRAWING - SIZE D (ALTERNATIVE)

CL & DIV D



STABILIZER ASSEMBLY 82-1-78P10

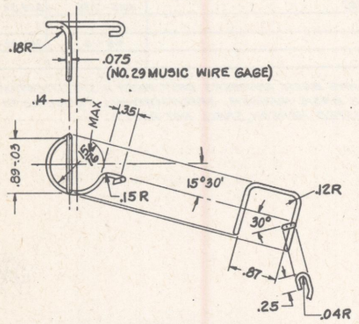




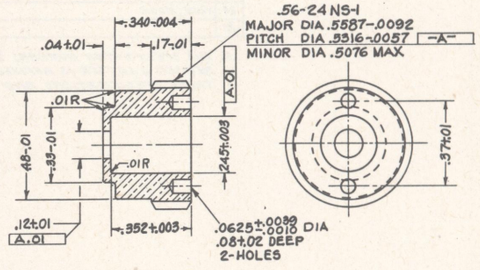
MINIMUM PHYSICAL PROPERTIES

TS 70,000	EL 12%
YP 60,000	RED 25%

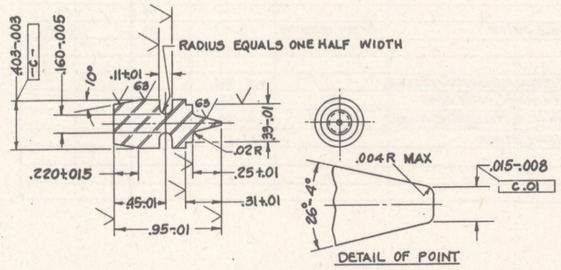
BODY, FUZE 82-1-78A10
STEEL, FSX1314, COLD-DRUWN
FINISH √ TO BE 125 √ OTHER SURFACES, AS SPECIFIED



PIN, SAFETY 82-1-78B10
STEEL, WIRE, MUSIC, SPRING, COMP A



HOLDER, DETONATOR 82-1-78C10
COMMERCIAL BRASS, ROD, COMPOSITION B, HALF-HARD
FINISH 125



PIN, FIRING 82-1-78D10
STEEL, FSX1314, COLD-DRAWN
FINISH √ TO BE 125 √ OTHER SURFACES, AS SPECIFIED

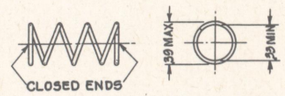
MINIMUM PHYSICAL PROPERTIES

TS 70,000	EL 12%
YP 60,000	RED 25%

LINE NO.	LIST OF DRAWINGS	DRAWING NUMBER
1	ASSEMBLY	82-1-78
2	DETAILS	82-1-86
3	STD FOR DIMENSIONING & TOLERANCING	30-1-7
4	LIST OF PARTS AND SPEC	82-1-78A

FOR ALTERNATIVE MATERIALS AND PROTECTIVE FINISHES SEE DRAWING 82-1-78A.

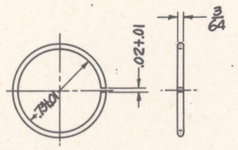
THIS STABILIZER USED ON THE FOLLOWING:
GRENADE, RIFLE, AT, M9A1
GRENADE RIFLE, SMOKE, M22A1



SPRING, FIRING PIN 82-1-78H10
STEEL, WIRE, MUSIC, SPRING, COMPOSITION A

REQUIREMENTS
A-SOLID HEIGHT NOT OVER .12 INCH.
B-WIND LEFT HAND.
C-SEASON THOROUGHLY AFTER WINDING.
D-TREAT TO REMOVE EMBRITTLEMENT WITHIN 24 HOURS AFTER PLATING.
E-LOAD AT .2 INCH = .63 LB MAXIMUM.
F-LOAD AT ASSEMBLED HEIGHT, .47 INCH = .29 LB MINIMUM. (OCCASIONAL CHECK WILL BE MADE, AFTER COMPRESSION FOR AT LEAST 24 HOURS AT ASSEMBLED HEIGHT).
G-LOADS APPLY AFTER SEASONING, PLATING AND TREATMENT TO REMOVE EMBRITTLEMENT.

ADVISORY DATA (MAY BE VARIED TO MEET REQUIREMENTS).
A-DIAMETER OF WIRE = .018 INCH.
B-TOTAL NUMBER OF COILS = 5.
C-NUMBER OF ACTIVE COILS = 3.
D-ADJUST FREE HEIGHT TO MEET LOAD REQUIREMENTS. (SUGGESTED TRIAL FREE HEIGHT = .79 INCH).
E-SEASON BY HEATING TO 500°F FOR 30 MINUTES
F-TO REMOVE EMBRITTLEMENT, HEAT TO 300°F FOR AT LEAST 30 MINUTES AS SOON AFTER PLATING AS PRACTICABLE.



RING, BRAZING 82-1-78R10
SOLDER, SILVER, CLASS 4

NOTES:-
A-UPON COMPLETION OF THE BRAZING OPERATION, BRAZING METAL SHALL BE VISIBLE IN AT LEAST 75% OF THE PERIPHERY OF THE OUTSIDE JOINT.
B-INSIDE OF TUBE MUST BE FREE OF WELD BURRS. TUBE MAY BE BROACHED WITH BUTTON BROACH HAVING .868 INCH DIAMETER MAXIMUM.
C-APPLY A LIGHT COAT OF LUBRICATING PRESERVATIVE OIL TO INSIDE OF STABILIZER TUBE AFTER PLATING.
D-FOR WELDING SYMBOLS SEE LIST OF PARTS.
E-A PLUG GAGE .8648 DIAMETER MUST FREELY ENTER TUBE TO THIS DEPTH.
F-PAINT EXTERIOR SURFACE (EXCEPT THREADS) WITH OLIVE DRAB LACQUER ENAMEL, OR ENAMEL AFTER PLATING.
G-EXTERIOR THREADS MAY CARRY TRACES OF OLIVE DRAB LACQUER ENAMEL OR ENAMEL, PROVIDED THEY PASS GAGE.
H-ASSEMBLE SAFETY PIN 82-1-78B, DETONATOR HOLDER 82-1-78C, FIRING PIN 82-1-78D AND SPRING 82-1-78H AFTER PLATING AND PAINTING.
K-ASSEMBLE SAFETY PIN AS SHOWN IN DOT AND DASH, THEN TURN, SNAPPING END AROUND STABILIZER TUBE.
L-STENCIL LOT NUMBER, AFTER PAINTING, WITH 9/16 HIGH FIGURES, WITH BLACK STENCIL INK.

SUPERSEDES 82-1-77 AND 82-1-78 WITH CHANGE JUNE 1 1949.

NOTICE:-THIS DRAWING SHALL NOT BE USED OR REPRODUCED EITHER WHOLLY OR IN PART EXCEPT WHEN AUTHORIZED IN CONNECTION WITH UNITED STATES GOVERNMENT PROCUREMENT.

REMOVE ALL BURRS.

SCALE, INCHES, 1, 2, 4

STABILIZER, GRENADE, RIFLE, METAL PARTS ASSEMBLY AND DETAILS.

HEAT TREATMENT & PROTECTIVE FINISH

PHYSICAL PROPERTIES

ORIGINAL DATE OF DRAWING APRIL 14, 1942

REVISIONS
10-6-1-49

CLASS	DIVISION	DRAWING
82	1	78

DRAWING PERTAINS TO
73-1-189
82-2-41

WEIGHT —
SCALE —
TOLERANCES ON DIMENSIONS (Unless otherwise Specified)

DO NOT APPLY PART NO. DO (As Specified)
W28 DWD
W28 RHD
W3 J.C.S.R.

SUBMITTED S.R. Brennan ORD ENGR
EXAMINED Col.
APPROVED Col.

D

ORDNANCE DEPT U.S. ARMY

DD FORM 1 JUNE 1948 11 SUPERSEDES SPG 1P

ARMY SERVICE FORCES
ORDNANCE DEPARTMENT

ORDNANCE DRAWING - SIZE D (ALTERNATIVE)

CL & DIV D

LIST OF PARTS

LINE NO.	NAME OF PART	NUMBER REQ'D PER COMPONENT	PIECE MARK	MATERIAL: SIZE OR FORM	MATERIAL: KIND	MATERIAL: GRADE	MATERIAL: SPEC NUMBER	APPROXIMATE UNIT WEIGHT (POUNDS)	APPROX GROSS WT OF RAW STOCK PER 1000 ASSEMBLIES	REMARKS
1	STABILIZER ASSEMBLY		82-1-78P					.5		(e)(m)
2										
3	BODY, FUZE	1	82-1-78A	BAR	STEEL, COLD-DRAWN	F5X1314	QQ-S-671	.23		(f)
4										
5	FIN	1	82-1-86W	SHEET	STEEL, COLD-ROLLED	WD1010	57-136	.05		(g)(m)
6	HOLDER, DETONATOR	1	82-1-78C	ROD	BRASS	B, HALF-HARD	QQ-B-611	.016		
7										
8	PIN, FIRING	1	82-1-78D	BAR	STEEL, COLD-DRAWN	F5X1314	QQ-S-671	.02		(j)(k)
9	PIN, SAFETY	1	82-1-78B	WIRE	STEEL; MUSIC, SPRING	COMP A	QQ-W-470	.005		(k)
10	RING, BRAZING	1	82-1-78R	WIRE	SOLDER, SILVER	CLASS 4	QQ-S-561	.002		(h)
11	SPRING, FIRING PIN	1	82-1-78H	WIRE	STEEL; MUSIC, SPRING	COMP A	QQ-W-470	.004		(P)
12	TUBE, STABILIZER	1	82-1-86U	TUBING	STEEL, COLD-DRAWN, TYPE I, CLASS A	WD1010	57-180	.172		(a)(b)
13										
14					FLUX, BRAZING		4-1121			
15					INK, STENCIL, BLACK		TT-I-558			
16					LACQUER ENAMEL, OLIVE DRAB	I	JAN-L-73			(d)
17					OIL, LUBRICATING	SPECIAL	2-120			
18										
19										

(a)-ALTERNATIVE MATERIALS:-(1) STEEL TUBING, WD1020, TYPE I, CLASS A, COLD-DRAWN, ANNEALED IMMEDIATELY PRECEDING FINAL COLD DRAW OR STEEL TUBING, WD1010, WD1020 OR WD1025, TYPE III (ELECTRIC RESISTANCE WELDED), CLASS A, COLD-DRAWN, ANNEALED IMMEDIATELY PRECEDING FINAL COLD DRAW, SPEC 57-180.
(b)-ANNEALED IMMEDIATELY PRECEDING FINAL COLD DRAW.
(c)-ALTERNATIVE MATERIALS:-(1) STEEL, F5X1315, F5X1335 OR F51020 TO F51040, COLD-DRAWN, SPEC QQ-S-671.
(d)-ALTERNATIVE MATERIAL:-(1) ENAMEL, OLIVE DRAB, GRADE I, SPEC JAN-E-74.
(e)-PROTECTIVE FINISH:-TYPE I, CLASS TS, RS, TSC OR RSC, SPEC 57-0-2 (PROTECTIVE FINISH FORWARD END OF FUZE BODY FOR A DISTANCE OF 2.20 INCHES MINIMUM).
(f)-ALTERNATIVE MATERIAL:-(1) STEEL, F5X1315, COLD-DRAWN, SPEC QQ-S-671.
(g)-ALTERNATIVE MATERIAL:-(1) STEEL, SHEET, WD1015, COLD-ROLLED, TEMPER NO.3 (QUARTER-HARD), FINISH NO.1 (DULL), SPEC 57-136.
(h)-ALTERNATIVE MATERIAL:-(1) SOLDER, SILVER, CLASS 6.
(j)-PROTECTIVE FINISH:-TYPE I, CLASS TS, RS, TSC OR RSC, SPEC 57-0-2.
(k)-ALTERNATIVE MATERIALS ARE INTENDED TO BE USED ONLY WHEN PRESCRIBED MATERIALS ARE NOT AVAILABLE.
(m)-FOR WELDING SYMBOLS SEE JAN-STD-12.
(P)-PROTECTIVE FINISH:-TYPE I, TS OR TSC, SPEC 57-0-2.

LIST OF SPECIFICATIONS

LINE NO.	LIST OF SPECIFICATIONS	SPECIFICATION NUMBER *	REQUIRED BY
1	AMMUNITION, EXCEPT SMALL ARMS AMMUNITION, GENERAL SPEC FOR	50-0-1	DWG 82-1-78
2	BRASS, COMMERCIAL: BARS, PLATES, RODS, SHAPES, SHEETS AND STRIPS	QQ-B-611	DWG 82-1-78
3			
4	CLEANING AND PREPARATION OF METAL SURFACES	JAN-C-490	DWG 82-1-78
5			
6	ENAMEL, LUSTRELESS, QUICK DRYING	JAN-E-74	DWG 82-1-78
7			
8	FINISHES, PROTECTIVE, FOR IRON AND STEEL PARTS	57-0-2	DWG 82-1-78
9	FLUX, BRAZING, (FOR SILVER SOLDER)	4-1121	DWG 82-1-78
10			
11	INK, STENCIL; OPAQUE, FOR MARKING NON-POROUS SURFACES, ETC	TT-I-558	DWG 82-1-78
12	LACQUER ENAMEL, LUSTRELESS	JAN-L-73	DWG 82-1-78
13	METALS; GENERAL SPECIFICATION FOR INSPECTION OF	QQ-M-151	QQ-S-671
14			
15			
16	OIL, LUBRICATING, PRESERVATIVE, SPECIAL	2-120	DWG 82-1-78
17	PAINTS AND RELATED MATERIALS, GENERAL SPECIFICATION FOR	3-1	JAN-L-73
18			
19	SOLDER, SILVER	QQ-S-561	DWG 82-1-78
20	STEEL, CARBON AND ALLOY; BARS	QQ-S-671	DWG 82-1-78
21	STEEL, CARBON AND ALLOY; SHEETS AND STRIPS	57-136	DWG 82-1-86
22			
23	STANDARD SPECIFICATION FOR MARKING SHIPMENTS BY CONTRACTORS	100-2	DWG 82-1-78
24	TUBING, ROUND, MECHANICAL AND STRUCTURAL; STEEL CARBON AND ALLOY ETC	57-180	DWG 82-1-86
25			
26	WIRE, STEEL (CARBON); SPRING, MUSIC	QQ-W-470	DWG 82-1-78
27	WELDING OF CONSTRUCTIONAL STEEL, METAL-ARC, MANUAL OR MACHINE; ETC	57-206-1	DWG 82-1-86
28			
29			

* THE SPECIFICATION NUMBERS SHOWN ARE BASIC NUMBERS ONLY. WHEN A SPECIFICATION IS REVISED A LETTER IS AFFIXED TO ITS BASIC NUMBER. SPECIFICATIONS REFERRED TO IN THESE SPECIFICATIONS AND NOT LISTED HEREON, SHALL NOT APPLY.

SUPERSEDES 82-1-77A WITH CHANGE JUNE 1, 1949.

NOTICE.—THIS DRAWING SHALL NOT BE USED OR REPRODUCED EITHER WHOLLY OR IN PART EXCEPT WHEN AUTHORIZED IN CONNECTION WITH UNITED STATES GOVERMENT PROCUREMENT.

STABILIZER ASSEMBLY, GRENADE, AT AND RIFLE. LIST OF PARTS AND LIST OF SPECIFICATIONS

CLASS	DIVISION	DRAWING
82	1	78A

DRAWING CONTAINS NO.: 82-1-78

ORIGINAL DATE OF DRAWING: JUNE 1, 1949

	DO NOT SCALE	APPLY PART NO. (As Specified)
WEIGHT		
SCALE	WAS	DWD
	WAS	RHD
		SER

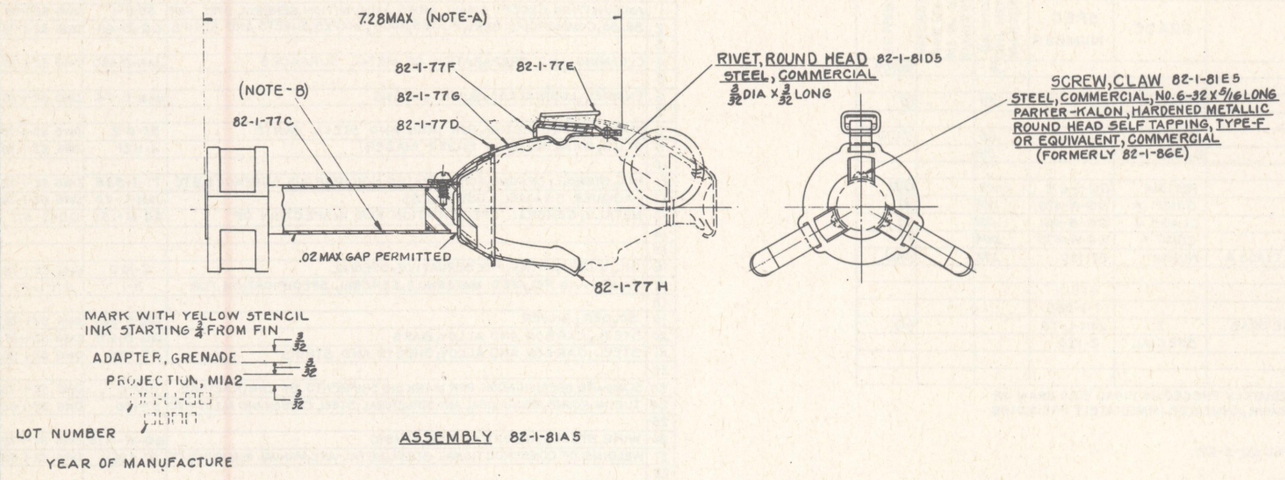
DRAWN: D. R. Bauman, CHIEF ENGR.
TRACED:
CHECKED: E. W. Dutton, COL.
APPROVED: J. H. Grant, COL.

D

ORDNANCE DEPT. U.S. ARMY

ORDNANCE DRAWING - SIZE D

CL & DIV D



ASSEMBLY 82-1-81A5

LINE NO.	LIST OF SPECIFICATIONS	SPECIFICATION NUMBER *	REQUIRED BY
1	AMMUNITION, EXCEPT SMALL ARMS AMM, GENERAL SPECIFICATION FOR	50-0-1	DWG 82-1-81
2	ADAPTER, GRENADE-PROJECTION, MIA2	50-50-6	DWG 82-1-81
3	CLEANING AND PREPARATION OF FERROUS SURFACES	JAN-C-490	DWG 82-1-81
4	ENAMEL, LUSTRELESS, QUICK-DRYING	JAN-E-74	DWG 82-1-81
5	FLUX, BRAZING, (FOR SILVER SOLDER)	4-1121	DWG 82-1-77
6	INK, STENCIL, OPAQUE, FOR MARKING NON-POROUS SURFACES ETC	TT-I-558	DWG 82-1-81
7	LACQUER ENAMEL, LUSTRELESS	JAN-L-73	DWG 82-1-81
8	METALS; GENERAL SPECIFICATION FOR INSPECTION OF	QQ-M-151	57-136
9			
10	OIL, LUBRICATING, PRESERVATIVE, SPECIAL	2-120	DWG 82-1-81
11	PAINTS AND RELATED MATERIALS, GENERAL SPEC FOR INSPECTION	3-1	TT-I-558
12			
13	STEEL, CARBON AND ALLOY; BARS	QQ-S-671	DWG 82-1-77
14	STEEL, CARBON AND ALLOY; SHEETS AND STRIPS	57-136	DWG 82-1-77
15	SOLDER; SILVER	QQ-S-561	DWG 82-1-77
16	STANDARD SPECIFICATION FOR MARKING SHIPMENTS BY CONTRACTOR	100-2	DWG 82-1-77
17			
18	TUBING, ROUND, MECH & STRUCT STEEL; CARBON & ALLOY SEAMLESS	57-180	DWG 82-1-86
19			
20	WELDING OF CONSTRUCTIONAL STEEL, METAL-ARC, MANUAL OR MACHINE; ETC	57-206-1	DWG 82-1-86

*THE SPECIFICATION NUMBERS SHOWN ARE BASIC NUMBERS ONLY. WHEN A SPECIFICATION IS REVISED A LETTER IS AFFIXED TO ITS BASIC NUMBER. SPECIFICATIONS REFERRED TO IN THESE SPECIFICATIONS AND NOT LISTED HEREON SHALL NOT APPLY.

LIST OF PARTS

LINE NO.	NAME OF PART	NUMBER REQUIRED PER COMPONENT	PIECE MARK	MATERIAL: SIZE OR FORM	MATERIAL: KIND	MATERIAL: GRADE	MATERIAL: SPEC NUMBER	APPROXIMATE UNIT WEIGHT (POUNDS)	APPROX GROSS WT OF RAW STOCK PER 1000 ASSEMBLIES	REMARKS
1	ASSEMBLY		82-1-81A				50-50-6			
2	STABILIZER ASSEMBLY		82-1-77C							(e)
3										
4	CUP, RETAINER	1	82-1-77D	SHEET	STEEL	WD1010	57-136	.031		(h)
5	CLAW, LONG	1	82-1-77G	STRIP	STEEL	WD1075	57-136	.019		
6	CLAW, SHORT	2	82-1-77H	STRIP	STEEL	WD1075	57-136	.014		
7	CLIP, ARMING	1	82-1-77E	STRIP	STEEL	WD1010	57-136	.030		(k)
8										
9	FIN	1	82-1-86W	STRIP	STEEL	WD1010	57-136	.05		(m) (e)
10										
11	PLUG	1	82-1-77L	BAR	STEEL	FSX1314	QQ-S-671			
12										
13	RETAINER, CLIP, ARMING	1	82-1-77F	STRIP	STEEL	WD1075	57-136	.007		
14	RING, BRAZING	1	82-1-77M	WIRE	SILVER SOLDER	CLASS 4	QQ-S-561			(g)
15	RIVET	1	82-1-81D		STEEL, ROUND HEAD		COMMERCIAL			
16										
17	SCREW, CLAW	3	82-1-81E		STEEL		COMMERCIAL			
18	TUBE, STABILIZER	1	82-1-86U	TUBING	STEEL, TYPE I, CLASS A	WD1010	57-180	.172		(c) (b)
19										
20	CLIP, LAUNCHER, POSITIONING		82-1-86L	STRIP	STEEL	WD1035	57-136			(d) (f)
21					FLUX, BRAZING		4-1121			
22					INK, YELLOW STENCIL		TT-I-558			
23					LACQUER ENAMEL, OLIVE DRAB	I	JAN-L-73			(a)
24					OIL, LUBRICATING		2-120			
25										

(a)-ALTERNATIVE MATERIAL:-(P) ENAMEL, OLIVE DRAB, GRADE I, SPEC JAN-E-74.
(b)-ANNEALED IMMEDIATELY PRECEDING FINAL COLD DRAW.
(c)-ALTERNATIVE MATERIALS:-(P) STEEL TUBING, WD1020 OR WD1025, TYPE I, CLASS A, COLD-DRAWN, ANNEALED IMMEDIATELY PRECEDING FINAL COLD DRAW, SPEC 57-180; OR; STEEL TUBING, WD1010, WD1020 OR WD1025, TYPE III (ELECTRIC RESISTANCE WELDED), CLASS A, COLD-DRAWN, ANNEALED IMMEDIATELY PRECEDING FINAL COLD DRAW, SPEC 57-180.
(d)-(SHIPPED SEPARATELY) ONE REQUIRED FOR EACH FOUR COMPLETE ASSEMBLIES.
(e)- FOR WELDING SYMBOLS SEE JAN-STD-19.
(f)-PROTECTIVE FINISH:-PHOSPHATE COATING, TYPE II, CLASS B, STAINED BLACK, SPEC 57-0-2.
(g)-ALTERNATIVE MATERIAL:-(P) SOLDER; SILVER, CLASS 6, SPEC QQ-S-561.
(h)-ALTERNATIVE MATERIALS:-(P) STEEL, SHEET, WD1015 OR WD 1020, COLD-ROLLED, TEMPER NO. 4 (50FT SKIN-ROLLED), FINISH NO.1 (DULL), SPEC 57-136.
(k)-ALTERNATIVE MATERIALS:-(P) STEEL, STRIP, WD1015 OR WD 1020, COLD-ROLLED, EDGE NO.4, TEMPER NO.4 (50FT SKIN-ROLLED), FINISH NO.1 (DULL), SPEC 57-136.
(m)-ALTERNATIVE MATERIAL-(P) STEEL, STRIP, WD1015, COLD-ROLLED, TEMPER NO.3 (QUARTER-HARD), FINISH NO.1 (DULL), SPEC 57-136.
(P)-ALTERNATIVE MATERIALS ARE INTENDED TO BE USED ONLY WHEN PRESCRIBED MATERIALS ARE NOT AVAILABLE.

LINE NO.	LIST OF DRAWINGS	DRAWING NUMBER
1	ASSEMBLY	82-1-81
2		
3	DETAILS	82-1-77
4	DETAILS	82-1-86
5		
6	PACKING AND MARKING OF BOX	20-4-369
7	PACKING BOX	76-1-511
8		

NOTES:-
A-COAT ENTIRE EXTERIOR SURFACE WITH OLIVE DRAB LACQUER ENAMEL, GRADE I. PAINT MUST BE BROKEN, IF NECESSARY, TO PERMIT FREE MOVEMENT OF ARMING CLIP AND RESULTANT UNCOATED AREAS ARE PERMITTED.
B-APPLY A LIGHT COAT OF OIL, LUBRICATING PRESERVATIVE, SPECIAL, TO INSIDE OF STABILIZER TUBE.
C-CLEAN ALL METAL SURFACES IN ACCORDANCE WITH GRADE II, SPEC JAN-C-490, BEFORE PAINTING.

SUPERSEDES 82-1-81 WITH CHANGE JUNE 1, 1949

NOTICE.-THIS DRAWING SHALL NOT BE USED OR REPRODUCED EITHER WHOLLY OR IN PART EXCEPT WHEN AUTHORIZED IN CONNECTION WITH UNITED STATES GOVERNMENT PROCUREMENT.

0 1 2 3 4 5 6 7 8 9 10 11 INCHES

ADAPTER, GRENADE PROJECTION, MIA2 METAL PARTS ASSEMBLY

HEAT TREATMENT & PROTECTIVE FINISH

PHYSICAL PROPERTIES

OR ORIGINAL DATE OF DRAWING: MARCH 10, 1943

REVISIONS

5 6-1-49

CLASS 82 | DIVISION 1 | DRAWING 81

DRAWING PERTAINS TO

WE SHIP | DO NOT | APPLY PART NO.

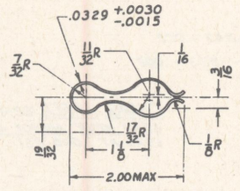
SCALE

TOLERANCES ON DIMENSIONS

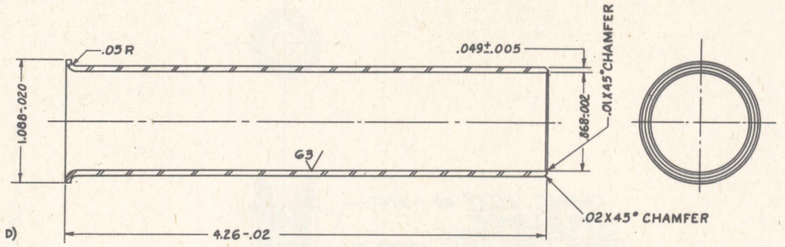
DESIGNED: Wal RHD
TRACED: Wal RHD
CHECKED: MJ
SUBMITTED:
ORD ENGR.
DRAWING: ER Dutton COL.
APPROVED: ER Dutton COL.

D

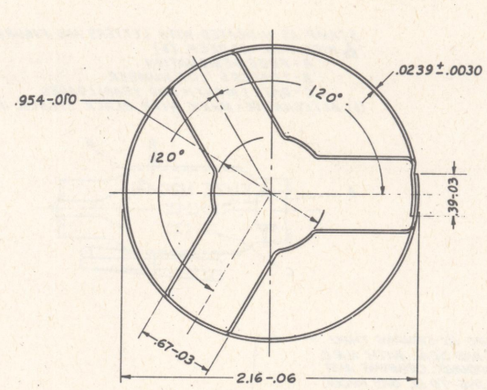


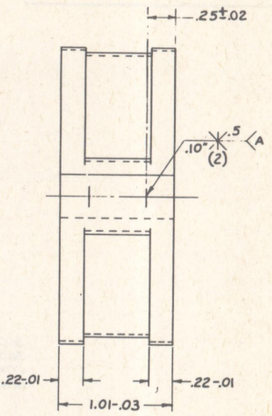


CLIP, LAUNCHER, POSITIONING 82-1-86L4 (SEE NOTE D)
STEEL, STRIP, WD1035, COLD-ROLLED, EDGE NO. 4
TEMPER NO.2 (HALF-HARD), FINISH NO.1 (DULL)

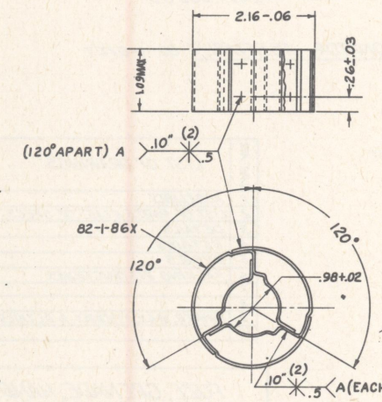


TUBE, STABILIZER 82-1-86U4
STEEL, TUBING, WD1010, TYPE I, CLASS A, COLD-DRAWN

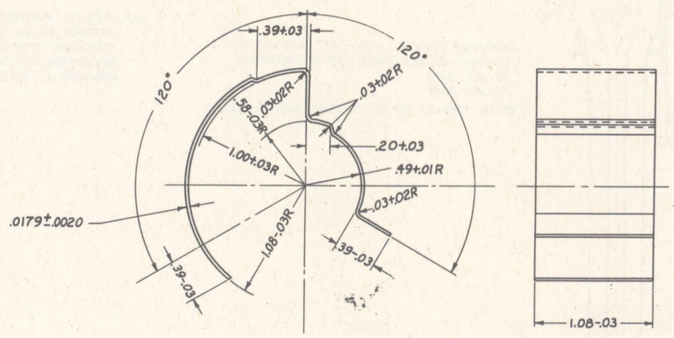




FIN 82-1-86W4 (SEE NOTE B)
STEEL, SHEET, WD1010, COLD-ROLLED
TEMPER NO.3 (QUARTER-HARD), FINISH NO1 (DULL)



FIN ASSEMBLY 82-1-86Z4 (SEE NOTE C)



BLADE, FIN 82-1-86X4
STEEL, SHEET, WD1010, COLD-ROLLED,
TEMPER NO.4 (SOFT SKIN-ROLLED), FINISH NO1 (DULL)

NOTES:-
A - FOR WELDING SYMBOLS SEE LIST OF PARTS
B - FOR USE WITH - GRENADE, RIFLE, AT, M9A2.
GRENADE, RIFLE, SMOKE (COLORED), M22A1.
GRENADE, RIFLE, SMOKE, COLORED, STREAMER, M23A1.
ADAPTER, GRENADE, PROJECTION, M1A2.
ADAPTER, GRENADE, PROJECTION, CHEMICAL, M2A1.
C FOR USE WITH - GRENADE, AT, PRACTICE, M11A4
D FOR USE WITH - GRENADE, RIFLE, SMOKE (COLORED), M22A1.
GRENADE, RIFLE, SMOKE, COLORED, STREAMER, M23A1.
ADAPTER, GRENADE, PROJECTION, M1A2.
ADAPTER, GRENADE, PROJECTION, CHEMICAL, M2A1.

FOR ADDITIONAL MATERIALS AND PROTECTIVE FINISHES, SEE LIST OF PARTS.

STABILIZER, GRENADE, RIFLE, METAL PARTS DETAILS.

HEAT TREATMENT & PROTECTIVE FINISH	CLASS	DIVISION	DRAWING
	82	1	86

PHYSICAL PROPERTIES

DRAWING PERTAINS TO
82-1-78
82-1-79
82-1-85
82-1-81
82-2-48

ORIGINAL DATE OF DRAWING AUGUST 25, 1944

REVISIONS
4 6-1-49

WEIGHT — ET NOT TO — APPLY PER MT TO

SCALE

TOLERANCES ON DIMENSIONS

.007

DRAWN: W.A.S. DWP; CCB W.A.S.; M.J. [illegible] C.A.S.R.; D.K. Beeman ORD CASE

CHECKED: C.R. Dutton COL.

APPROVED: J.P. Baird COL.

D

ORDNANCE DEPT. U.S. ARMY

SUPERSEDES 82-1-78, 82-1-79, 82-1-85, 82-1-86 AND 82-2-48 (IN PART) WITH CHANGE JUNE 1, 1949.

NOTICE:- THIS DRAWING SHALL NOT BE USED OR REPRODUCED EITHER WHOLLY OR IN PART EXCEPT WHEN AUTHORIZED IN CONNECTION WITH UNITED STATES GOVERNMENT PROCUREMENT.

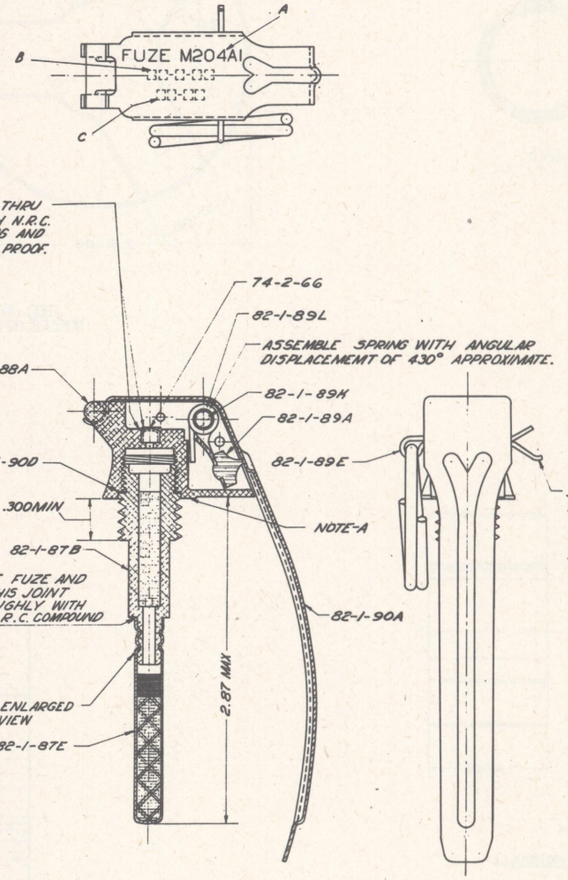
REMOVE ALL BURRS.

SCALE, INCHES, 1/1, 2/1

HEAT TREATMENT AND FINAL FINISH

PHYSICAL PROPERTIES	
Y.P.	
T.S.	
EL. 2	
RED.	
BR.	
ROCK.	

STAMP AS INDICATED WITH LETTERS AND FIGURES
1/8 HIGH AND .01 DEEP. (b)
A - FUZE DESIGNATION
B - LOADERS LOT NUMBER
C - DATE (MONTH AND YEAR) LOADED
(b) ALTERNATIVE: MARK WITH BLACK STENCIL INK.

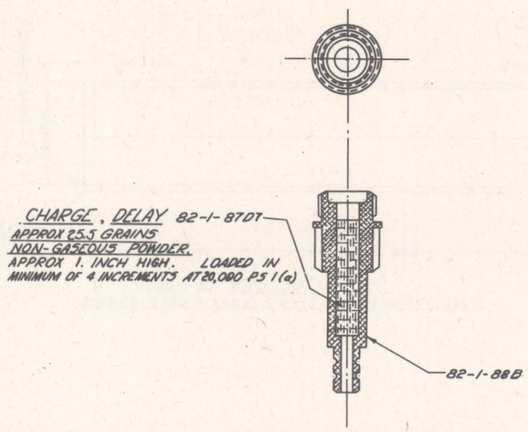


ENLARGED VIEW SHOWING DETONATOR ASSEMBLY CRIMPED TO DELAY ELEMENT ASSEMBLY

10/7

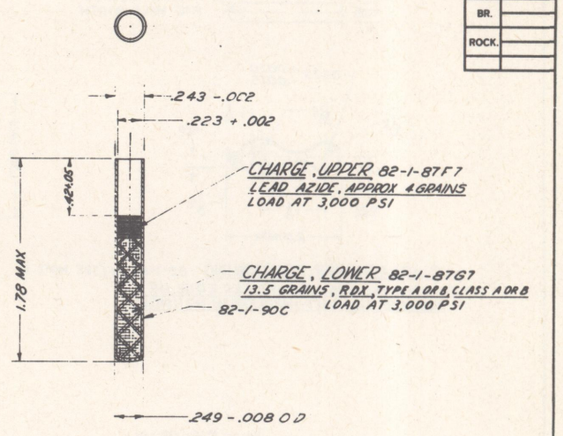
ASSEMBLY 82-1-87A7

NOTE A - MAXIMUM ALLOWABLE GAP IN MEASURING OUT-OF-SQUARENESS OF THREAD AXIS WITH WASHER SURFACE OF BODY WHEN DETERMINED BY APPLICABLE ORDNANCE GAGES, .006



DELAY ELEMENT ASSEMBLY 82-1-87B7

(a) - DELAY POWDER MAY BE PELLETED BEFORE BEING RECONSOLIDATED INTO DELAY HOUSING, PROVIDED EACH PELLET IS RECONSOLIDATED SINGLY IN THE DELAY HOUSING AT SPECIFIED PRESSURE.



DETONATOR ASSEMBLY 82-1-87E7

SPREAD SAFETY PIN (45° ADVISORY) TO GIVE RESISTANCE TO WITHDRAWAL
10 LBS MIN
30 LBS MAX
BOTH PRONGS TO BE SPREAD APPROX EQUAL.

LINE NO.	LIST OF DRAWINGS	DRAWING NUMBER
1	ASSEMBLY	82-1-87
2	LIST OF PARTS & LIST OF SPECS	82-1-87A
3	DETAILS	82-1-88
4	DETAILS	82-1-89
5	DETAILS	82-1-90
6	PACKING INSTRUCTIONS	76-1-555
7		
8		
9	PRIMER, M42, ASSEMBLY & DETAILS	74-2-66
10		

NOTICE:- THIS DRAWING SHALL NOT BE USED NOR REPRODUCED EITHER WHOLLY OR IN PART EXCEPT WHEN AUTHORIZED IN CONNECTION WITH UNITED STATES GOVERNMENT PROCUREMENT.

SUPERSEDES 82-1-87 WITHOUT CHANGE 9-27-48

0 1 2 3 4 5 INCHES

FUZE, GRENADE, HAND, M204A1 ASSEMBLY

MARCH 29, 1944

CLASS	DIVISION	DRAWING	FILE
82	1	87	

REVISIONS

5	9-12-47			
6	9-27-48			
7	8-28-50			

TOLERANCE ON DIMENSIONS NOT OTHERWISE SPECIFIED
DECIMAL ±
FRACTIONAL ±
ANGULAR ±

DRG. PERTAINS TO

D'FTSMAN G.A.P. | TRACER R.C. | ENGINEER

CHECKER A.C.J. | ENGINEER

SUBMITTED: D.R. Brennan ORD. ENG., ORD. DEPT. U.S.A.

EXAMINED: C.R. Dutton COL., ORD. DEPT. U.S.A.

APPROVED BY ORDER OF THE CHIEF OF ORDNANCE: J.H. Stacy COL., ORD. DEPT. U.S.A.

D

ORDNANCE DEPT., U.S.A.

HEAT TREATMENT AND FINAL FINISH

LIST OF PARTS

LINE NO.	NAME OF PART	NUMBER REQD. PER COMPONENT	PIECEMARK	MATERIAL: SIZE OR FORM	MATERIAL: KIND	MATERIAL: GRADE	MATERIAL: SPEC. NUMBER	APPROXIMATE UNIT WEIGHT (GRAINS)	APPROXIMATE WT. OF RAW STK. PER 1000 ASSEMBLIES	REMARKS
1	ASSEMBLY		82-1-87A				50-51-2			
2	DELAY ELEMENT ASSEMBLY	1	82-1-87B							
3	PRIMER, M42 ASSEMBLY	1	74-2-GG				50-48-19			
4	STRIKER ASSEMBLY	1	82-1-89A					38.5		(pc)
5	DETONATOR ASSEMBLY	1	82-1-87E							
6	PULL RING ASSEMBLY	1	82-1-89E					105.0		
7										
8										
9										
10	BODY	1	82-1-88A	CASTING	ZINC-BASE-ALLOY	COMP A OR B	QQ-Z-363			(a)(L)
11										
12	CASE, DETONATOR	1	82-1-90C	STRIP	ALUMINUM-ALLOY	CONDITION A	QQ-A-318			
13	CHARGE, UPPER	1	82-1-87F		LEAD AZIDE		MIL-L-3055	4.		
14	CHARGE, LOWER	1	82-1-87G		RDX	TYPE A OR B CLASS A OR B	JAN-R-398	13.5		(e)
15	CHARGE, DELAY	1	82-1-87D		POWDER, NON-GASEOUS					(R)
16										
17										
18	GASKET	1	82-1-90D	SHEET	LEAD		COMMERCIAL	5.5		
19										
20										
21	HOUSING, DELAY	1	82-1-88B	CASTING	ZINC-BASE-ALLOY	COMP A OR B	QQ-Z-363			(a)
22										
23										
24	LEVER	1	82-1-90A	STRIP	STEEL	WD1015 OR WD1020	57-136			(K)(Pa)
25										
26	PIN, SAFETY	1	82-1-89F	WIRE	STEEL, COTTER PIN		COMMERCIAL	12.0		(Pa)
27	PIN, HINGE	1	82-1-89K	ROD	STEEL	FS1020	QQ-S-633	24.0		(Pa)
28	POINT, STRIKER	1	82-1-89B	BAR	STEEL	FSW113 OR FSB113	QQ-S-633	20.0		
29	POINT, STRIKER (ALTERNATIVE)		82-1-89C	BAR	STEEL	FS1010 OR FS1020	QQ-S-633			
30										
31	RING, PULL	1	82-1-89G	WIRE	STEEL	WD1020, TYPE I	48-5	93.0		(Pa)(f)
32										
33	STRIKER	1	82-1-89D	STRIP	STEEL	WD1015 OR WD1020	57-136	18.5		(c)
34	SPRING	1	82-1-89L	WIRE	STEEL	COMP. A.	QQ-W-470	16.8		(Pb)
35										
36										
37										
38										
39					COMPOUND, N R C RED		JAN-C-388			
40					INK, STENCIL, BLACK		TT-I-558			(h)
41										

(a) ALTERNATIVE MATERIAL:- (Q) ALUMINUM-BASE-ALLOY; DIE CASTING, CLASS 5, SPEC. QQ-A-591 (m)
(K) ALTERNATIVE FINISH:- COAT BOTH SIDES OF LEVER WITH OLIVE DRAB LACQUER ENAMEL, GRADE I SPEC JAN-L-73 OR OLIVE DRAB ENAMEL GRADE I, SPEC JAN-E-74.
(L) TREAT CHEMICALLY TO PRODUCE A LUSTRELESS OLIVE DRAB FINISH.

(c) ALTERNATIVE:- STEEL WD-1010, NO. 4 TEMPER, ROCKWELL B50 TO B65.
(h) FOR USE WITH ALTERNATIVE METHOD OF MARKING ONLY.
(e) ALTERNATIVE MATERIAL:- (Q) PETN, CLASS D, SPEC JAN-P-387.

(f) PROTECTIVE FINISH MAY BE OMITTED FROM ENDS OF WIRE.

(P) PROTECTIVE FINISHES FOR IRON AND STEEL PARTS, SPEC. 57-0-2.
(Pa) TYPE I, CLASS RS C (OLIVE DRAB).
(Pb) TYPE I, CLASS TS.
(Pc) TYPE I, CLASS RS.
(Q) ALTERNATIVE MATERIALS ARE INTENDED TO BE USED ONLY WHEN PRESCRIBED MATERIALS ARE NOT AVAILABLE.

(R) DELAY CHARGE COMPOSITION

BARIUM CHROMATE, CLASS A	60% ± 2%	SPEC JAN-B-550
POTASSIUM PERCHLORATE, GRADE A	14% ± 2%	SPEC JAN-P-217 (s)
70/30 ZIRCONIUM-NICKEL ALLOY, DICHROMATED	APPROX 9 %	26% COMMERCIAL (t) RATIO TO BE ADJUSTED
30/70 ZIRCONIUM-NICKEL ALLOY, DICHROMATED	APPROX 17 %	26% COMMERCIAL (t) FOR BURNING TIME.

(s) THE POTASSIUM PERCHLORATE SHALL HAVE AN AVERAGE PARTICLE DIAMETER OF 20 ± 5 MICRONS, AS DETERMINED BY THE FISHER SUB-SIEVE SIZER.
(t) THE ALLOYS SHALL HAVE AN AVERAGE PARTICLE DIAMETER OF 5 ± 3 MICRONS, AS DETERMINED BY THE FISHER SUB-SIEVE SIZER.

CLASSIFCATION CHANGED TO UNCLASSIFIED BY AUTHORITY OF O.C.M. NO 26391 BY LT. COL. C.M. Gallagher DATE- JAN. 18, 1945

[redacted]

PHYSICAL PROPERTIES

Y.P.	
T.S.	
EL 2	
RED.	
BR	
ROCK	

LIST OF SPECIFICATIONS AND STANDARDS

LINE NO.		SPEC OR STD NO. *	REQUIRED BY
1	AMMUNITION, EXCEPT SMALL ARMS AMM., GENERAL SPEC. FOR	50-0-1	DRG. 82-1-87
2	ALUMINUM-ALLOY (AL-5R) (ALUMINUM-MAGNESIUM-CHROMIUM); PLATE AND SHEET	QQ-A-318	DRG. 82-1-90
3	ALUMINUM-BASE-ALLOY; DIE CASTINGS	QQ-A-591	DRG. 82-1-88
4	BARIUM CHROMATE (FOR PYROTECHNIC MIXTURES)	JAN-B-550	DRG 82-1-87
5	COMPOUND, SEALING, NRC	JAN-C-388	DRG. 82-1-87
6	GRENADE, HAND, M204, M205, PRACTICE, AND M206, FUZES, METAL PARTS FOR	50-67-2	DRG. 82-1-87
7	FUZES, GRENADE, HAND, M204, PRACTICE, M205 AND M206, LOADING, ETC	50-51-2	DRG. 82-1-87
8			
9	FINISHES, PROTECTIVE, FOR IRON AND STEEL PARTS	57-0-2	DRGS. 82-1-89 82-1-90
10	ENAMEL, LUSTRELESS, QUICK DRYING.	JAN-E-74	DRG. 82-1-87
11	LEAD AZIDE	MIL-L-3055	DRG. 82-1-87
12			
13	INK, STENCIL, OPAQUE, FOR MARKING NON-POROUS SURFACES	TT-I-558	DRG. 82-1-90
14	METALS, GENERAL SPECIFICATIONS FOR INSPECTION OF	QQ-M-151	DRG. 82-1-87
15	LACQUER ENAMEL, LUSTRELESS	JAN-L-73	DRG. 82-1-87
16	PENTAERYTHRITE TETRANITRATE (PETN)	JAN-P-387	DRG 82-1-87
17	PRIMER, M42 *	50-48-19	DRG. 74-2-GG
18	RDX	JAN-R-398	DRG 82-1-87
19			
20	POTASSIUM PERCHLORATE	JAN-P-217	DRG 82-1-87
21	POWDER, BLACK, NATIONAL MILITARY ESTABLISHMENT SPECIFICATION	JAN-P-223	DRG. 82-1-87
22	STEEL, CARBON; BARS (GENERAL PURPOSE)	QQ-S-633	DRG. 82-1-89
23	STEEL, SHEETS AND STRIPS, CARBON AND ALLOY	57-136	DRGS. 82-1-89 82-1-90
24	ORDNANCE FINISHES (SURFACE ROUGHNESS)	URAX6	DRG 82-1-88
25	WIRE, STEEL (CARBON); SPRING, MUSIC	QQ-W-470	DRG. 82-1-89
26	WIRE, SOFT IRON AND STEEL, BARE AND COATED	48-5	DRG. 82-1-89
27	ZINC-BASE-ALLOY; DIE CASTINGS	QQ-Z-363	DRG. 82-1-88
28	STANDARD FOR DIMENSIONING AND TOLERANCING	30-1-7	DRG 82-1-88
29	SURFACE ROUGHNESS, WAVINESS AND LAY	MIL-STD-10	DRG 82-1-88

*THE SPECIFICATION AND STANDARD NUMBERS SHOWN ARE BASIC NUMBERS ONLY. WHEN REVISED A LETTER IS AFFIXED TO THE BASIC NUMBER. SPECIFICATIONS REFERRED TO IN THE SPECIFICATIONS, AND NOT LISTED HEREON, SHALL NOT APPLY.

(m) CHEMICAL COMPOSITION

ALTERNATIVE	MIN.	MAX.
MAGNESIUM	3.50%	4.00%
MANGANESE	.50%	.75%
COPPER		.10%
SILICON		.30%
IRON		.40%
OTHER COMBINED ELEMENTS		.03%
ALUMINUM	BALANCE	

FUZE, GRENADE, HAND, M204A1 LIST OF PARTS AND LIST OF SPECIFICATIONS AND STANDARDS

MARCH 29, 1944

CLASS	DIVISION	DRAWING	FILE
82	1	87A	

REVISIONS

1	8-3-44	7	8-28-50
2	12-11-44		
3	1-18-45		
4	5-4-45		
5	8-15-45		
6	9-12-47		

DRG. PERTAINS TO
82-1-87

TOLERANCE ON DIMENSIONS NOT OTHERWISE SPECIFIED;
DECIMAL ±
FRACTIONAL ±
ANGULAR ±

DRAFTSMAN E.R.G. | TRACER E.R.G. | ENGINEER
CHECKED L.H. | O.K. | ENGINEER A.M.A.

SUBMITTED: O. M. Kellogg, LT. COL. ORD. DEPT. U.S.A. PHIL. ENG. 3RD DEPT. U.S.A.

EXAMINED: H. H. Waller, COL. ORD. DEPT. U.S.A.

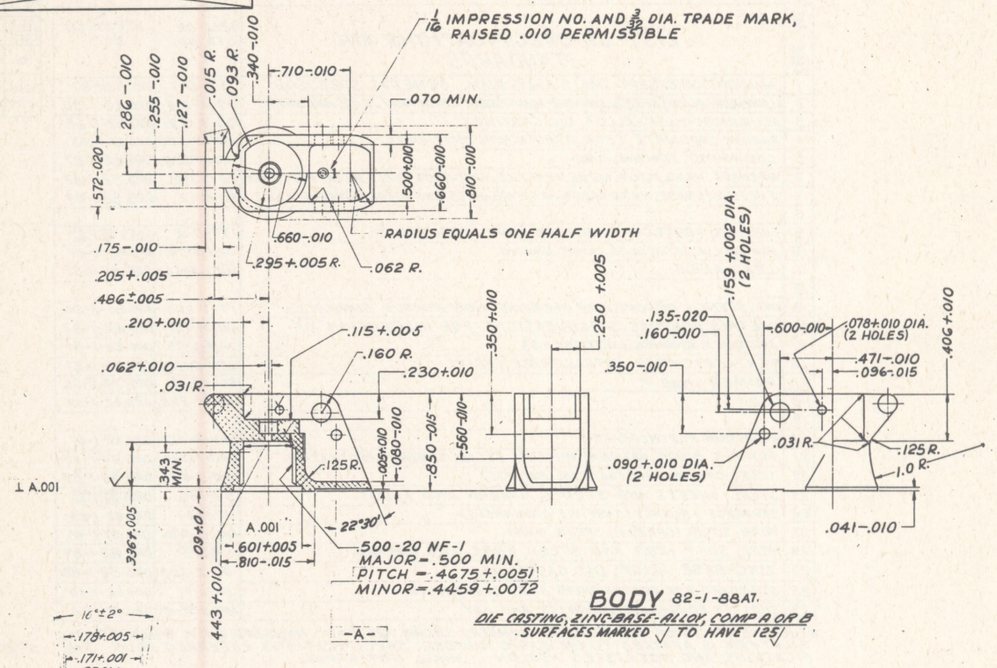
APPROVED BY ORDER OF THE CHIEF OF ORDNANCE: L. G. Lukes, COL. ORD. DEPT.

D

ORDNANCE DEPT. U.S.A.

HEAT TREATMENT AND FINAL FINISH

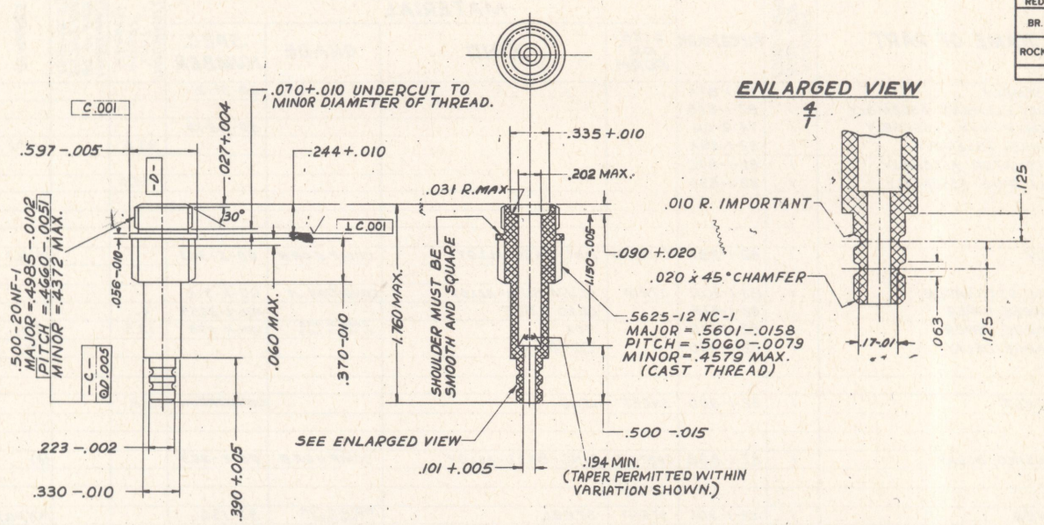
PHYSICAL PROPERTIES	
Y.P.	
T.S.	
EL. 2	
RED.	
BR.	
ROCK.	



BODY 82-1-88A7.

DIE CASTING, ZINC-BASE-ALLOY, COMP A OR B
SURFACES MARKED √ TO HAVE 125√

ENLARGED VIEW OF PRIMER CAVITY
SCALE 8/1



ENLARGED VIEW
4/1

HOUSING, DELAY 82-1-88B7

DIE CASTING, ZINC-BASE-ALLOY, COMP A OR B
SURFACES MARKED √ TO HAVE 125√

FOR PROTECTIVE FINISHES AND ALTERNATIVE MATERIALS, SEE LIST OF PARTS.

[redacted]

CLASSIFICATION CHANGED TO UNCLASSIFIED
BY AUTHORITY OF O.C.M. NO. 26931
BY LT. COL. C.M. Gallagher DATE - JAN. 18, 1945

FUZE, GRENADE, HAND, M204A1, M205, M206, DETAILS

MARCH 29, 1944	CLASS	DIVISION	DRAWING	FILE
REVISIONS	82	1	88	

1	8-3-44	7	8-28-50
2	12-11-44		
3	1-19-45		
4	8-15-45		
5	9-12-47		
6	10-20-48		

DRG. PERTAINS TO
82-1-87
82-1-100
82-1-104

TOLERANCE ON DIMENSIONS NOT OTHERWISE SPECIFIED
DECIMAL ±
FRACTIONAL ±
ANGULAR ±

D'FTSMAN G.A.P. | TRACER E.R.G. | ENGINEER | CHECKER E.B. | ENG. MECH.

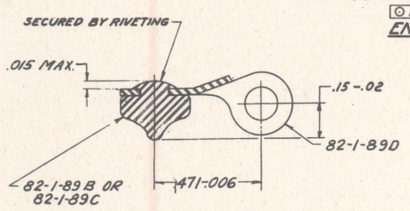
SUBMITTED: J.W. Bowman, PRINC. ENG. ORD. DEPT. U.S.A.
EXAMINED: W.W. Noller, COL. ORD. DEPT. U.S.A.
APPROVED BY ORDER OF THE CHIEF OF ORDNANCE: J.G. Lukes, COL. ORD. DEPT. U.S.A.

D

ORDNANCE DEPT. U.S.A.

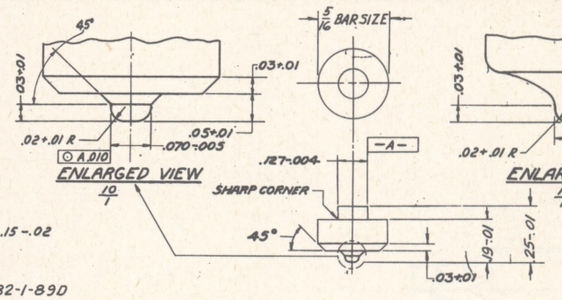
HEAT TREATMENT AND FINAL FINISH

PHYSICAL PROPERTIES	
Y.P.	
T.S.	
EL. 2	
RED.	
BR.	
ROCK.	



STRIKER ASSEMBLY 82-1-89A6

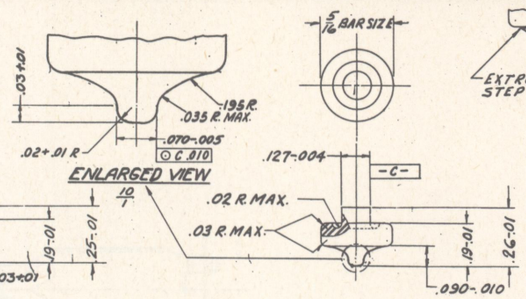
4/1



POINT, STRIKER 82-1-89B6

STEEL, FS1117 OR FSB1113, AS-COLD-FINISHED
FINISH ALL OVER 125

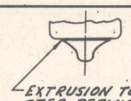
4/1

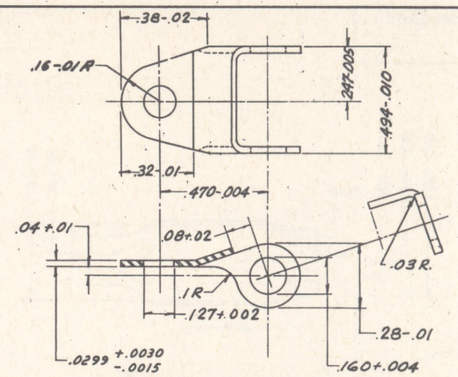


POINT, STRIKER, (ALTERNATIVE) 82-1-89C6

STEEL, FS 1010 OR FS1020, AS-COLD-FINISHED
FINISH ALL OVER 125

4/1

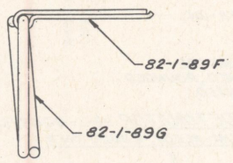




STRIKER 82-1-89D6

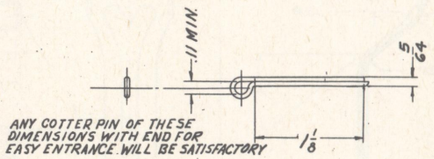
STEEL, STRIP, WD1015 OR WD1020, COLD-ROLLED, TEMPER NO. 3 (QUARTER-HARD) FINISH NO. 2 (REGULAR BRIGHT).

4/1



PULL RING ASSEMBLY 82-1-89E

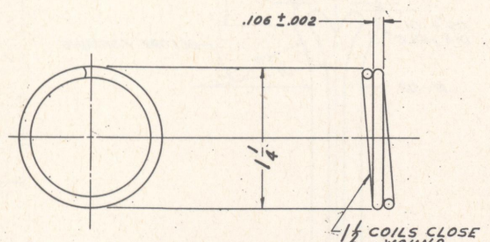
2/1



PIN, SAFETY 82-1-89F4

STEEL COTTER PIN, COMMERCIAL

2/1



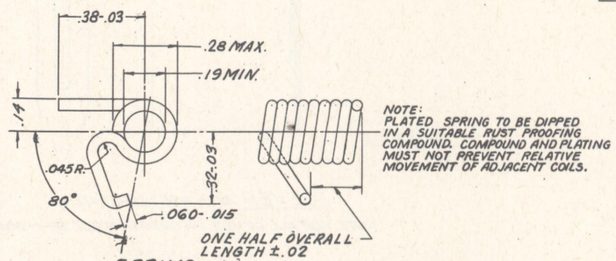
RING, PULL 82-1-89G6

STEEL WIRE, WD1020

2/1

NOTES:-

2. ALL DETAILS AND ASSEMBLIES SHOWN ON THIS SHEET SHOULD BE INTERCHANGEABLE WITH FUZES M6A4C, M6A4D M10A3 AND FUZE, TRIP, M12-E[illegible] PIECE MARK 82-1-89K



SPRING 82-1-89L4

MUSIC WIRE, COMP. A
CLOSE WOUND, WIND LEFT HAND

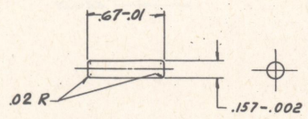
4/1

REQUIRED VALUES

A. OVERALL LENGTH= 4 INCH MAX.
B. TORQUE AT 430° ANGULAR DISPLACEMENT= 2.00±.05 INCH LBS.
C. LOAD APPLIES AFTER SEASONING AND PLATING
D. WHEN ASSEMBLED AT 430° FOR 24 HOURS, THE SPRING MUST NOT LOSE MORE THAN .15 INCH LB.
E. DIAMETER OF WIRE=.035 INCH
F. TOTAL NUMBER OF COILS, 9
G. WITHIN 24 HOURS AFTER PLATING, TREAT TO REMOVE EMBRITTLEMENT

ADVISORY DATA

A. SEASONING BY HEATING RECOMMENDED
B. SEASONING TEMPERATURE, 500°F.
C. TO REMOVE EMBRITTLEMENT, HEAT AT 300°F. FOR AT LEAST 30 MINUTES AS SOON AFTER PLATING AS PRACTICABLE.



PIN, HINGE 82-1-89K6

STEEL, FS1020, AS-COLD-FINISHED
FINISH ALL OVER 63

2/1

NOTES:-

FOR PROTECTIVE FINISHES SEE DRG. 82-1-87A.

CLASSIFICATION CHANGED TO UNCLASSIFIED
BY AUTHORITY OF O.C.M. NO. 26391
BY LT. COL. A. M. Barraghan DATE- JAN. 18, 1945

[redacted]

FUZE, GRENADE, HAND M204A1, M205, M206, DETAILS

MARCH 29, 1944

CLASS	DIVISION	DRAWING	PIECE
82	1	89	

REVISIONS

1	8-3-44
2	12-11-44
3	1-18-45
4	8-15-45
5	9-18-47
6	8-28-50

DRG. PERTAINS TO

82-1-87
82-1-100
82-1-104

TOLERANCE ON DIMENSIONS NOT OTHERWISE SPECIFIED
DECIMAL ±
FRACTIONAL ±
ANGULAR ±

D'TTSMAN E.R.G. | TRACER J.J.R. | ENGINEER | CHECKER E.B. | ENGINEER

SUBMITTED: [signature] PRINC. ENG. ORD. DEPT. U.S.A.

EXAMINED: H.M. Koller COL. ORD. DEPT. U.S.A.

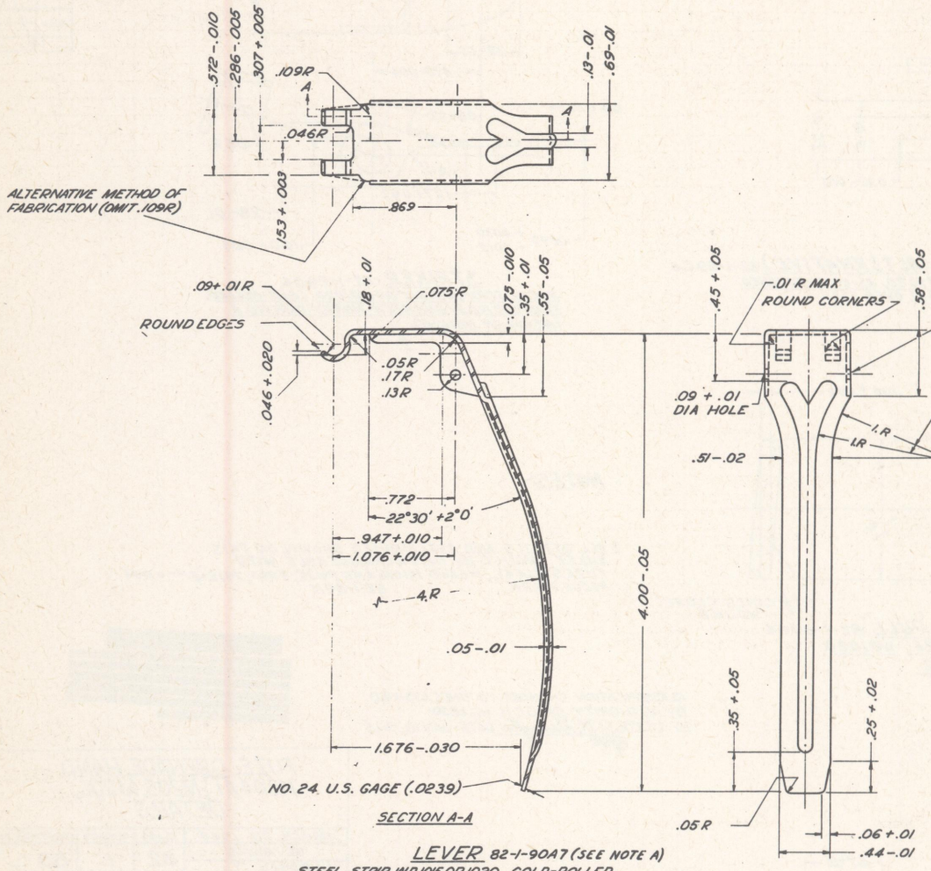
APPROVED BY ORDER OF THE CHIEF OF ORDNANCE: [signature] COL. ORD. DEPT. U.S.A.

D

ORDNANCE DEPT. U.S.A.

HEAT TREATMENT AND FINAL FINISH

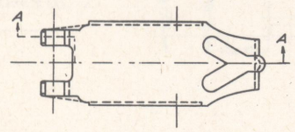
PHYSICAL PROPERTIES	
Y.P.	
T.S.	
EL. 2	
RED.	
BR.	
ROCK.	

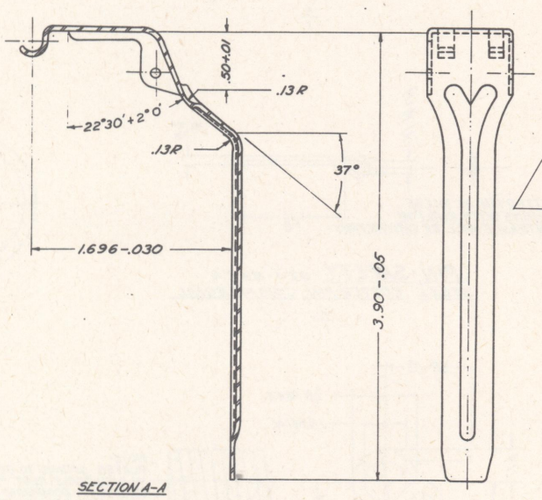


LEVER 82-1-90A7 (SEE NOTE A)

STEEL, STRIP, WD 1015 OR 1020, COLD-ROLLED TEMPER NO. 3 (QUARTER HARD), FINISH NO. 2 (REGULAR BRIGHT)

2/1

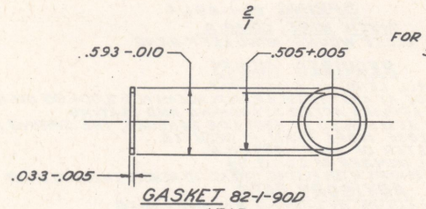




LEVER 82-1-90B7 (SEE NOTE B)

NOTE: FOR ALL OTHER INFORMATION SEE 82-1-90A

2/1

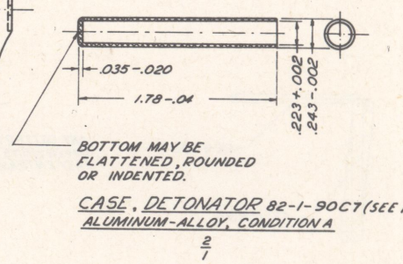


FOR PROTECTIVE FINISHES SEE, LIST OF PARTS

GASKET 82-1-90D

LEAD

2/1



CASE, DETONATOR 82-1-90C7 (SEE NOTE C)

ALUMINUM-ALLOY, CONDITION A

2/1

NOTES:-
A- FOR USE WITH FUZE, GRENADE, M204A1 FOR USE WITH FUZE, GRENADE, M205
B- FOR USE WITH FUZE, GRENADE, M206
C- FOR USE WITH FUZE, GRENADE, M204A1 FOR USE WITH FUZE, GRENADE, M206

SUPERSEDES 82-1-90 WITH CHANGE 9-27-48

NOTICE :- THIS DRAWING SHALL NOT BE USED NOR REPRODUCED EITHER WHOLLY OR IN PART EXCEPT WHEN AUTHORIZED IN CONNECTION WITH UNITED STATES GOVERNMENT PROCUREMENT.

FUZE, GRENADE, HAND. M204A1, M205, M206. DETAILS

MARCH 29, 1944	CLASS	DIVISION	DRAWING	FILE-
REVISIONS	82	1	90	

REVISIONS		
5	9-12-47	
6	9-27-48	
7	8-28-50	

TOLERANCE ON DIMENSIONS NOT OTHERWISE SPECIFIED
DECIMAL ±
FRACTIONAL ±
ANGULAR ±

DRG. PERTAINS TO
82-1-87
82-1-100
82-1-104

D'FTSMAN	TRACER	ENGINEER
A.J.O.	R.C.	
CHECKER		ENGINEER
A.C.U.		

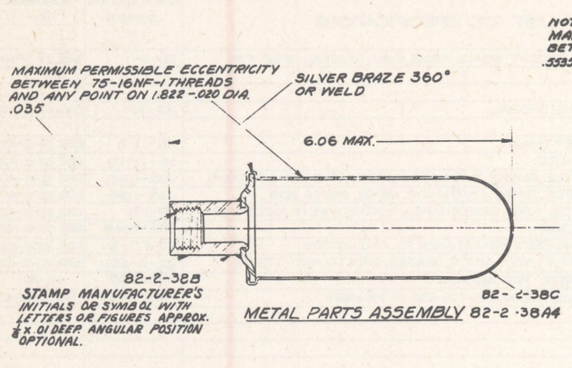
SUBMITTED: D.E. Beaman, ORD ENG. ORD. DEPT., U.S.A.

EXAMINED: C.B. Dutton, COL. ORD. DEPT., U.S.A.

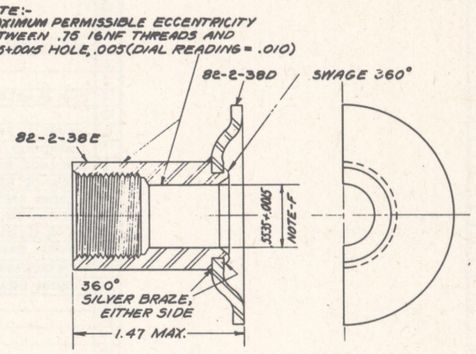
APPROVED BY ORDER OF THE CHIEF OF ORDNANCE: J.H. Hanes, COL., ORD. DEPT., U.S.A.

D

ORDNANCE DEPT., U.S.A.



METAL PARTS ASSEMBLY 82-2-38A4



UNION, BODY, ASSEMBLY 82-2-38B4

NOTES:-
A - METAL PARTS ASSEMBLY SHALL NOT LEAK WHEN SUBJECTED TO AN INTERNAL AIR PRESSURE TEST OF 85 LBS PER SQ.IN., MAINTAINED FOR 60 SECONDS, BEFORE PAINTING WITH ASSEMBLY COMPLETELY SUBMERGED IN SUITABLE LIQUID.
B - APPLY LIGHT COAT OF ENGINE OIL TO PRESS FIT SURFACE.
D - COAT EXTERIOR SURFACE WITH LACQUER ENAMEL OR ENAMEL, BLUE-GRAY.
E - BEFORE OILING OR PAINTING, ALL SURFACES MUST BE CLEANED IN ACCORDANCE WITH SPEC. AXS-1245, GRADE II, TYPE 4 OR 5.
F - REAM AFTER ASSEMBLY. HOLE MAY BE ELLIPTICAL PROVIDED MAJOR AXIS DOES NOT EXCEED .5535 AT ANY POINT FOR A CHORDAL DISTANCE OF 1/8 INCH.

LIST OF PARTS

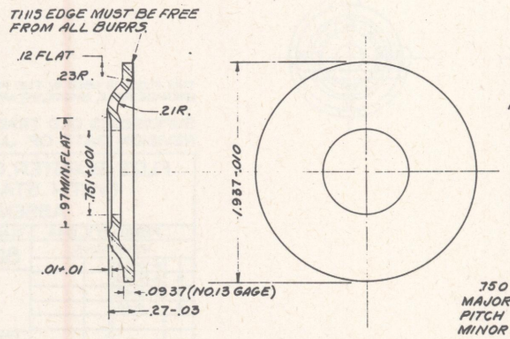
LINE NO.	NAME OF PART	NUMBER REQ'D PER COMPONENT	PIECE-MARK	MATERIAL: SIZE OR FORM	MATERIAL: KIND	MATERIAL: GRADE	MATERIAL: SPECIFICATION NUMBER	APPROX. UNIT WEIGHT (POUNDS)	APPROVED HT. OF RAW STOCK PER ASSEMBLIES	REMARKS
1	METAL PARTS ASSEMBLY		82-2-38A				AXS-1196	.424		
2	FLANGE, BODY, UNION	1	82-2-38D	STRIP	STEEL, COLD ROLLED	WD1812 OR WD1815	57-136			(b)
3	BODY	1	82-2-38C	STRIP	STEEL, COLD ROLLED, ANNEALED	WD1010 OR WD1013	57-136	.045		
4	BODY, UNION	1	82-2-38E	ROD	STEEL, COLD ROLLED	WD1315 OR WD1315	57-107	.131		
5	UNION BODY ASSEMBLY	1	82-2-38B					.176		
6					SOLDER, SILVER	CLASS 4 OR 6	QQ-S-561			
7										
8					FLUX, BRAZING		4-1121			
9										
10					LACQUER ENAMEL, BLUE-GRAY	I	3-162			(a)
11					OIL, ENGINE	SAE-10	2-104			
12										

(a) ALTERNATIVE:- ENAMEL, BLUE-GRAY, GRADE I, SPEC. 3-67
(b) SUBSTITUTE:- STEEL, HOT ROLLED, WD1010 OR WD1015, PICKLED

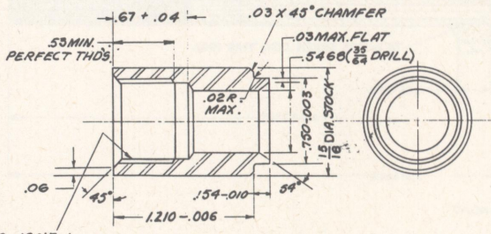
LIST OF SPECIFICATIONS

LINE NO.	LIST OF SPECIFICATIONS	SPEC. NUMBER *	REQUIRED BY
1	AMMUNITION, EXCEPT SMALL ARMS AMMUNITION, GEN. SPEC. FOR	50-0-1	DRG. 82-2-38
2	GRENADE, RIFLE, SMOKE (WP) M19A1, METAL PARTS FOR	AXS-1196	DRG. 82-2-38
3	CLEANING AND PREPARATION OF METAL SURFACES	AXS-1245	DRG. 82-2-38
4	LACQUER ENAMEL, LUSTRELESS	3-162	DRG. 82-2-38
5	METALS, GENERAL SPECIFICATION FOR INSPECTION OF	QQ-M-151	57-136
6			
7	FLUX, BRAZING, (FOR SILVER SOLDER)	4-1121	DRG. 82-2-38
8	STEEL, SHEET OR STRIP, CARBON AND ALLOY	57-136	DRG. 82-2-38
9	SOLDER, SILVER	QQ-S-561	DRG. 82-2-38
10	ENAMEL, LUSTRELESS, QUICK DRYING	3-67	DRG. 82-2-38
11	OIL, ENGINE	2-104	DRG. 82-2-38

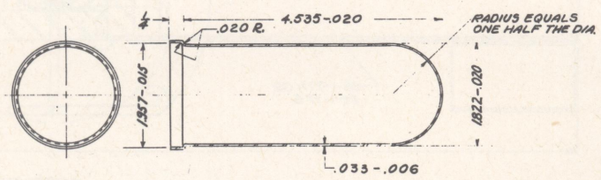
* THE SPECIFICATION NUMBERS SHOWN ARE BASIC NUMBERS ONLY. WHEN A SPECIFICATION IS REVISED A LETTER IS AFFIXED TO ITS BASIC NUMBER. SPECIFICATIONS REFERRED TO IN THESE SPECIFICATIONS AND NOT LISTED HEREON SHALL NOT APPLY.



FLANGE, BODY, UNION 82-2-38D2
STEEL, COLD ROLLED WD1010 OR WD1015



BODY, UNION 82-2-38E3
STEEL, COLD ROLLED WD1314 OR WD1315
FINISH "F"



BODY 82-2-38C3
STEEL, WD1010 OR WD1015
COLD ROLLED, ANNEALED. EXTRA DEEP DRAWING

NOTE:-
STRESS RELIEVE AFTER LAST DRAWING OPERATION AT APPROX. 1000°F FOR 15 MIN. AT TEMPERATURE
ALTERNATIVE:- MOUTH ANNEAL BY INDUCTION HEATING.

REMOVE ALL BURRS.

CLASSIFICATION CHANGED TO UNCLASSIFIED
BY AUTHORITY OF OCM NO. 23532
BY M Thompson

[redacted]

OBSOLESCENT

SCALE 1, 2/7

SUPERSEDES OLD TRACING 82-2-38
UNDER REVISION DATE OF OCTOBER 25, 1944

GRENADE, RIFLE, SMOKE, WP, M19A1
METAL PARTS ASSEMBLY AND DETAILS

FEBRUARY 3, 1944	CLASS	DIVISION	DRAWING	FILE
REVISIONS	82	2	38	

1	4-10-44	
2	10-25-44	
3	5-18-45	
4	8-15-45	
5	7-8-46	

TOLERANCE ON DIMENSIONS NOT OTHERWISE SPECIFIED
DECIMAL ±
FRACTIONAL ±
ANGULAR ±

DRG. PERTAINS TO

DFTSMAN A.F.H. | TRACER K.L.M. | CHECKED

SUBMITTED: Wm Gallagher, LT COL, ORD DEPT U.S.A.

EXAMINED: D.L. Woodbury by cp, LT COL, ORD DEPT U.S.A.

APPROVED BY ORDER OF THE CHIEF OF ORDNANCE:
C.S. Reed by cp, COL, ORD DEPT U.S.A.

D

ORDNANCE DEPT. U.S.A.

LIST OF PARTS

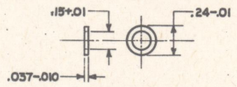
LINE NUMBER	NAME OF PART	NUMBER REQUIRED PER COMPONENT	PIECEMARK	MATERIAL: SIZE OR FORM	MATERIAL: KIND	MATERIAL: GRADE	MATERIAL: SPECIFICATION NUMBER	APPROXIMATE UNIT WEIGHT (POUNDS)	APPROX. GROSS WT. OF RAW STOCK PER 1000 ASSEMBLIES	REMARKS
1	ASSEMBLY		82-2-40A				AXS-1198			
2	ADAPTER ASSEMBLY		82-2-42L							
3	DETONATOR ASSEMBLY	1	82-2-42B		NON-ELECTRIC	TYPE I	49-20			
4	DETONATOR M18	1	73-2-185A				PXS-1048			
5	STABILIZER ASSEMBLY	1	82-2-77A					.46		
6	BURSTER ASSEMBLY	1	82-2-42A							
7	CASE, DETONATOR	1	82-2-42G	STRIP	GILDING METAL		57-171 AND 57-171-2			(b)
8	STABILIZER ASSEMBLY (ALTERNATIVE)	1	82-2-77B							
9	CHARGE, FLASH	1	82-2-42C		75% DIAZODINITROPHENOL 25% HEXANITROMANNITE			.06 GRAM		
10	CHARGE, LOWER	1	82-2-42E		PETN	CLASS D	PXS-890	13.5 GRAM		
11	CHARGE, UPPER	1	82-2-42D		HEXANITROMANNITE			7 GRAM		
12	COLLAR, ADAPTER	1	82-2-42K	BAR	BRASS		COMMERCIAL			
13										
14	CUP, DETONATOR	1	82-2-42F	STRIP	GILDING METAL		57-171 AND 57-171-2			(b)
15										
16	CUSHION	1	82-2-40B		CORK, COMPRESSED		COMMERCIAL	.001		
17										
18	TUBE, ADAPTER	1	82-2-42H	BAR	BRASS	B-HALF HARD	QQ-B-611			(c)
19										
20					N.R.C. COMPOUND	A	50-11-10			
21										
22					PETTMAN CEMENT		50-11-8			
23										
24										
25										
26										

(b) ALTERNATIVE :- COPPER CLASS "A" SPEC. QQ-C-501, OR COPPER TUBING, SEAMLESS, ANNEALED, COMMERCIAL.
(c) ALTERNATIVE :-BRASS TUBING, SPEC. AXS-651

LIST OF SPECIFICATIONS

LINE NO.	LIST OF SPECIFICATIONS	SPECIFICATION NUMBER *	REQUIRED BY
1	AMMUNITION, EXCEPT SMALL ARMS AMM., GENERAL SPEC. FOR	50-0-1	DRG. 82-2-40
2			
3			
4	CAP, BLASTING, SPECIAL	49-20	DRG. 82-2-42
5			
6	CEMENT, PETTMAN	50-11-8	DRG. 82-2-40
7	COMPOUND, N.R.C.	50-11-10	DRG. 82-2-42
8	GRENADE, RIFLE, SMOKE (WP) M19A1, LOADING ASSEMBLY & PACKING	AXS-1198	DRG. 82-2-40
9	GRENADE, RIFLE, SMOKE (WP) M19A1, METAL PARTS FOR	AXS-1196	DRG. 82-2-40
10	GILDING METAL RODS, BARS, SHAPES, PLATES, SHEETS AND STRIPS	57-171	DRG. 82-2-42
11	DETONATOR, M18	PXS-1048	DRG. 73-2-185
12	METAL, GILDING (95/5 BRASS) SHEETS AND STRIPS	57-171-2	DRG. 82-2-42
13	COPPER, BARS, PLATES, RODS, SHAPES, SHEETS AND STRIPS	QQ-C-501	DRG. 82-2-42
14	PENTAERYHRITE TETRANITRATE	PXS-890	49-20
15	TUBING, BRASS, SEAMLESS FOR USE IN PRIMERS	AXS-651	DRG. 82-2-42
16			
17			
18			
19			
20			
21			

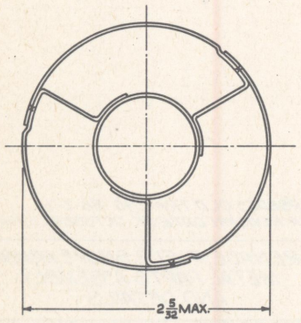
* THE SPECIFICATION NUMBERS SHOWN ARE BASIC NUMBERS ONLY. WHEN A SPECIFICATION IS REVISED A LETTER IS AFFIXED TO ITS BASIC NUMBER. SPECIFICATIONS REFERRED TO IN THESE SPECIFICATIONS AND NOT LISTED HEREON SHALL NOT APPLY.

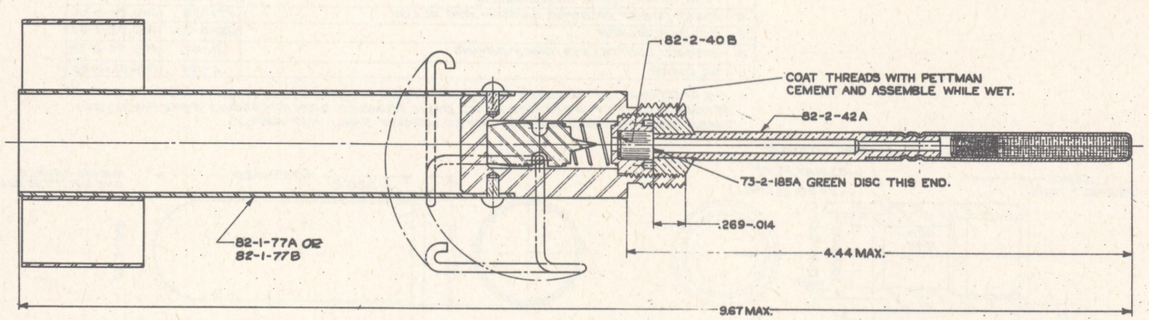


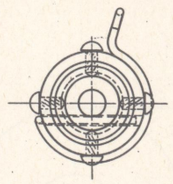
CUSHION 82-2-40B
COMPRESSED CORK, COMMERCIAL
DIAMETER DIMENSIONS CONTROL TOOL MANUFACTURE.

LIST OF DRAWINGS

LINE NO.	LIST OF DRAWINGS	DRAWING NUMBER
1	FUZE, BURSTER, GRENADE	82-2-40
2	DETONATOR M18	73-2-185
3	FUZE, RIFLE GRENADE, DETAILS	82-2-42
4	DETAILS	82-1-78
5	STABILIZER ASSEMBLY	82-1-77







ASSEMBLY 82-2-40A3

THIS FUZE IS USED IN THE FOLLOWING:-
GRENADE, RIFLE, SMOKE, WP, M19 A1, DRG. 82-0-109.

SUPERSEDES OLD TRACING 82-2-40 UNDER REVISION DATE OF JUNE 19, 1944.

CLASSIFICATION CHANGED TO UNCLASSIFIED
BY AUTHORITY OF OCM NO. 23532
BY M Thompson

[redacted]

OBSOLESCENT

0 1 2 3 4 5 INCHES

FUZE, BURSTER, GRENADE, RIFLE, (WITH STABILIZER) ASSEMBLY

FEBRUARY 5, 1944	CLASS	DIVISION	DRAWING	FILE
REVISIONS	82	2	40	

1	4-10-44		
2	6-19-44		
3	8-15-45		
4	7-8-48		

TOLERANCE ON DIMENSIONS NOT OTHERWISE SPECIFIED
DECIMAL ±
FRACTIONAL ±
ANGULAR ±

DRAFTSMAN C.K. | TRACER S.K. | ENGINEER

CHECKER J.B. | O.C. | PROJECT ENGINEER

DRG. PERTAINS TO 82-0-109

SUBMITTED: [signature] COL., ORD. DEPT. U. S. A.

EXAMINED: P. L. Woodbury LT. COL., ORD. DEPT. U. S. A.

APPROVED BY ORDER OF THE CHIEF OF ORDNANCE: C. S. Reed by J. COL., ORD. DEPT. U. S. A.

D

ORDNANCE DEPT. U. S. A.

ORDNANCE DRAWING - SIZE D (ALTERNATIVE)

CL & DIV D

LIST OF PARTS

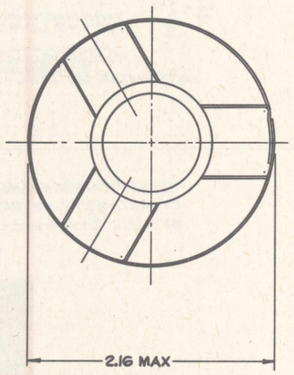
LINE NO.	NAME OF PART	NUMBER REQ'D PER COMPONENT	PIECE MARK	MATERIAL: SIZE OR FORM	MATERIAL: KIND	MATERIAL: GRADE	MATERIAL: SPEC NUMBER	APPROX UNIT WEIGHT (POUNDS)	APPROX GROSS WT OF RAW STOCK PER 1000 ASSEMBLIES	REMARKS
1	ASSEMBLY		82-2-41A				50-50-12	.51		
2										
3										
4	PRIMER M45	1	74-2-76A							
5	STABILIZER ASSEMBLY	1	82-1-78P					.50		
6										
7	CUSHION	1	82-2-41B	SHEET	CORK-COMPOSITION	CLASS I	HH-C-576	.001		
8										
9	RETAINER, DETONATOR	1	82-2-41C	BAR	STEEL, COLD-DRAWN	FS1112	QQ-S-671	.01		(a) (b)
10										
11										
12										
13										
14										
15										

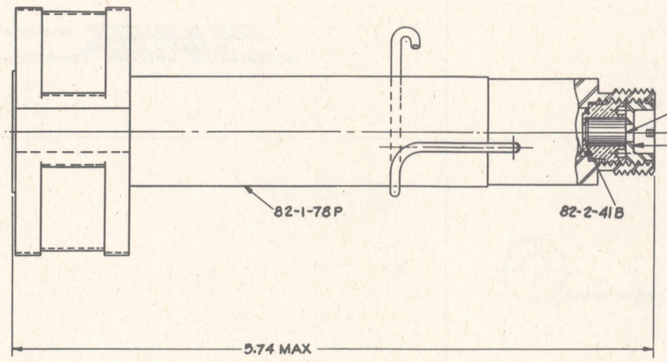
(a) ALTERNATIVE MATERIALS:-(C)STEEL, FSX1314 OR FSX1315 COLD-DRAWN, SPEC QQ-S-671 (b) OR COMMERCIAL BRASS, ROD, CLASS B, HALF-HARD, SPEC QQ-B-611.
(b) PROTECTIVE FINISH:- TYPE I, CLASS T5, R5, R5C OR T5C, SPEC 57-0-2.
(c) ALTERNATIVE MATERIALS ARE INTENDED TO BE USED ONLY WHEN PRESCRIBED MATERIALS ARE NOT AVAILABLE.

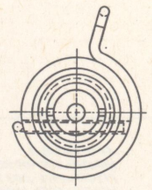
LIST OF SPECIFICATIONS

LINE NO.	LIST OF SPECIFICATIONS	SPEC NUMBER *	REQUIRED BY
1	AMMUNITION, EXCEPT SMALL ARMS AMMUNITION, GENERAL SPEC FOR	50-0-1	DWG 82-2-41
2			
3			
4	CORK-COMPOSITION; GASKET AND SHEET	HH-C-576	DWG 82-2-41
5	BRASS, COMMERCIAL; BARS, PLATES, RODS, SHAPES, SHEETS & STRIPS	QQ-B-611	DWG 82-2-41
6			
7			
8	FINISHES, PROTECTIVE, FOR IRON AND STEEL PARTS	57-0-2	DWG 82-2-41
9			
10			
11	GRENADES, RIFLE, SMOKE (COLORED) M22A1, METAL PARTS FOR	AXS-1208	DWG 82-2-41
12			
13	GRENADES, RIFLE, SMOKE (COLORED) M22A1, LOADING ASSY & PACKING	50-50-12	DWG 82-2-41
14	METALS; GENERAL SPEC FOR INSPECTION OF	QQ-M-151	QQ-S-671
15			
16	STEEL, CARBON AND ALLOY, BARS	QQ-S-671	DWG 82-2-41
17			
18			

* THE SPECIFICATION NUMBERS SHOWN ARE BASIC NUMBERS ONLY. WHEN A SPECIFICATION IS REVISED A LETTER IS AFFIXED TO ITS BASIC NUMBER. SPECIFICATIONS REFERRED TO IN THESE SPECIFICATIONS AND NOT LISTED HEREON SHALL NOT APPLY.







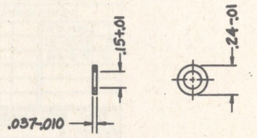
ASSEMBLY 82-2-41A5

NOTE:
A - BLUE DISC THIS END

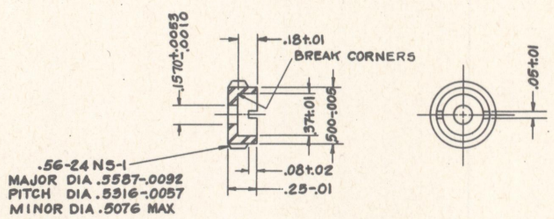
THIS FUZE USED IN THE FOLLOWING:-
GRENADE, RIFLE, SMOKE (COLORED) M22A1, DWG 82-0-117.

LIST OF DRAWINGS

LINE NO	LIST OF DRAWINGS	DRAWING NUMBER
1	FUZE, IGNITING, GRENADE, RIFLE	82-2-41
2		
3	STABILIZER ASSEMBLY	82-1-78
4		
5	PRIMER, M45	74-2-76
6		
7		



CUSHION 82-2-41B5
CORK-COMPOSITION, CLASS I
DIAMETER DIMENSIONS CONTROL TOOL MANUFACTURE.



RETAINER, DETONATOR 82-2-41C5
STEEL, FS1112, COLD-DRAWN
FINISH 125

NOTICE:- THIS DRAWING SHALL NOT BE USED OR REPRODUCED EITHER WHOLLY OR IN PART EXCEPT WHEN AUTHORIZED IN CONNECTION WITH UNITED STATES GOVERNMENT PROCUREMENT.

SUPERSEDES 82-2-41 WITH CHANGE JUNE 1, 1949

REMOVE ALL BURRS

0 1 2 3 4 5 INCHES

FUZE, IGNITING, GRENADE, RIFLE (WITH STABILIZER). ASSEMBLY AND DETAILS.

HEAT TREATMENT & PROTECTIVE FINISH

CLASS	DIVISION	DRAWING
82	2	41

DRAWING PERTAINS TO
82-0-117

PHYSICAL PROPERTIES

ORIGINAL DATE OF DRAWING FEB. 25, 1944

REVISIONS
5 6-1-49

WEIGHT
SCALE —
TOLERANCES ON DIMENSIONS (Unless otherwise specified)

DO NOT APPLY PART NO. DO (As Specified:)

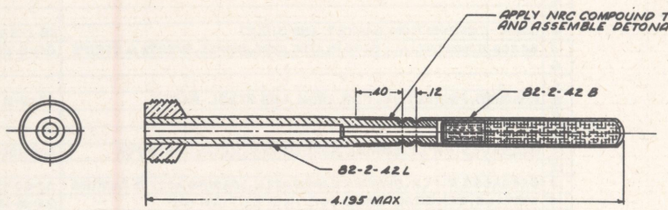
Wld Prod
Wld RHD

SUBMITTED D.P. Beeman, CHIEF ENGR.
EXAMINED C.R. Dutton, COL.
APPROVED J.H. Sands, COL.

D

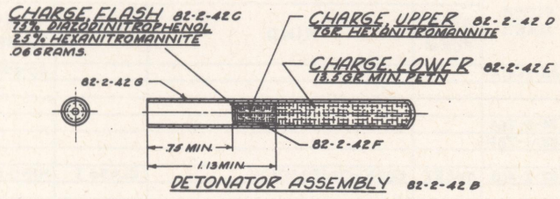
ORDNANCE DEPT U.S. ARMY

HEAT TREATMENT AND FINAL FINISH

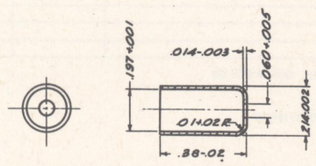


BURSTER ASSEMBLY 82-2-42 A

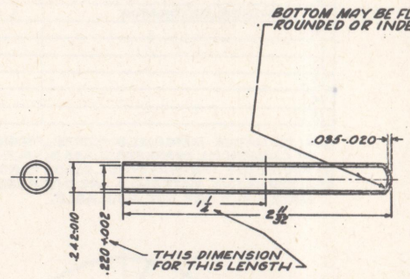
ALLOWABLE ECCENTRICITY BETWEEN ADAPTER-COLLAR THREADS(.56-24NS-1) AND OUTSIDE DIAMETER OF DETONATOR ASSEMBLY(.242-.010), .025



DETONATOR ASSEMBLY 82-2-42 B

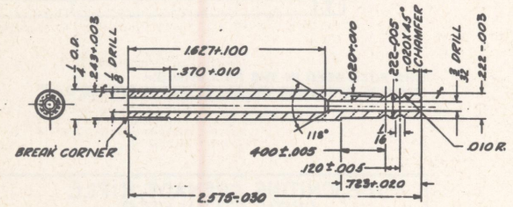


CUP, DETONATOR 82-2-42 F
GILDING METAL
ALTERNATIVE MATERIAL:- COPPER, CLASS 'A'

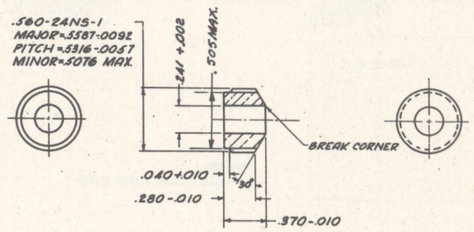


CASE DETONATOR 82-2-42 G
GILDING METAL
ALTERNATIVE MATERIAL:- COPPER, CLASS 'A'

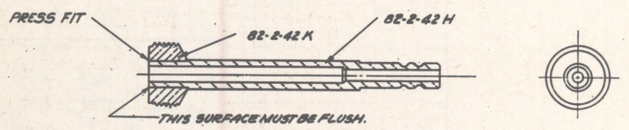
PHYSICAL PROPERTIES	
Y.P.	
T.S.	
EL. 2	
RED.	
BR.	
ROCK.	



TUBE, ADAPTER 82-2-42 H2
AA253, COMPOSITION-D, HALF HARD
ALTERNATIVE: BRASS TUBING SPEC. AXS-631
NOTE: MAXIMUM PERMISSIBLE ECCENTRICITY BETWEEN 1/8 INCH DRILLED HOLE AND 1/4 INCH O.D., .010



COLLAR, ADAPTER 82-2-42 K2
BRASS



ADAPTER ASSEMBLY 82-2-42 L2

CLASSIFICATION CHANGED TO UNCLASSIFIED
BY AUTHORITY OF OCM NO. 23532
BY W. Thompson

[redacted]

FUZE, GRENADE, RIFLE, DETAILS

FEBRUARY 5, 1944

CLASS	DIVISION	DRAWING	FILE
82	2	42	

REVISIONS

1	PHILCO 4A	
2	5-18-45	
3	7-8-48	

TOLERANCE ON DIMENSIONS NOT OTHERWISE SPECIFIED
DECIMAL ±
FRACTIONAL ±
ANGULAR ±

D'TSMAN [illegible] TRACER [illegible] ASSOC. ENGINEER W.J.
CHECKER W.R. MAIN ENGINEER [illegible]

DRG. PERTAINS TO
82-2-40

SUBMITTED:
H.J. Downes
CHIEF ENGINEER ORD. DEPT. U.S.A.

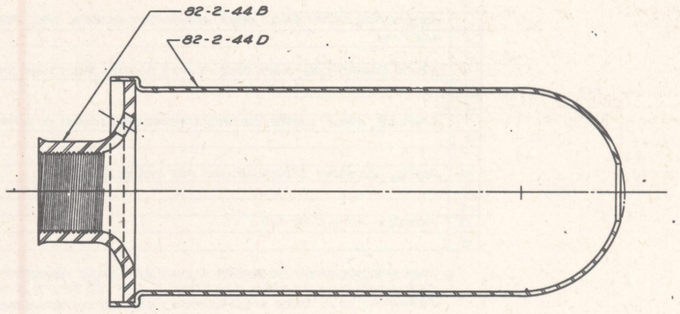
EXAMINED:
W.H. Holle
COL., ORD. DEPT., U.S.A.

APPROVED BY ORDER OF THE CHIEF OF ORDNANCE:
J.G. Lukes
COL., ORD. DEPT., U.S.A.

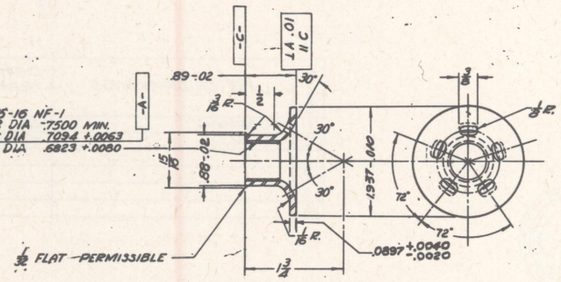
OBSOLESCENT
SCALE: 4/4

D

ORDNANCE DEPT., U.S.A.



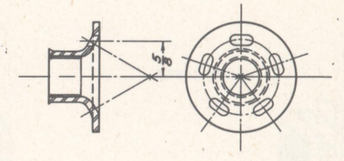
METAL PARTS ARRANGEMENT 82-2-44 A



UNION, BODY 82-2-44B

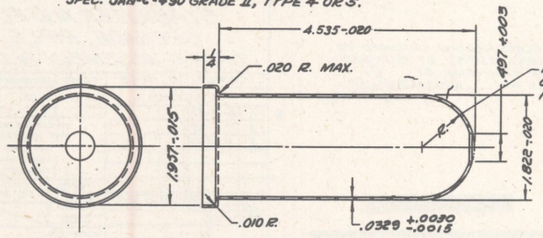
STEEL, STRIP, WD1010, COLD-ROLLED, TEMPER NO.5 (DEAD SOFT), FINISH NO.1 (DULL)

COAT ENTIRE EXTERIOR SURFACE WITH BLUE GRAY LACQUER ENAMEL. COAT ENTIRE INTERIOR SURFACE, INCLUDING THREADS, WITH BAKING VARNISH, PHENOLIC, AFTER PREPARATION OF SURFACE IN ACCORDANCE WITH SPEC. JAN-C-490 GRADE II, TYPE 4 OR 5.



UNION, BODY (ALTERNATIVE) 82-2-44C

OTHERWISE SAME AS 82-2-44B



BODY 82-2-44D6

STEEL, STRIP, WD1010, COLD-ROLLED, TEMPER NO.5 (DEAD SOFT), FINISH NO.1 (DULL)

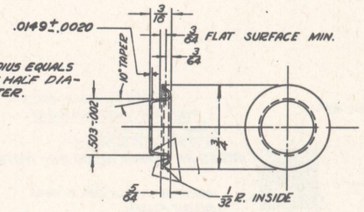
NOTES:-

A - STRESS RELIEVE AFTER LAST DRAWING OPERATION AT APPROX. 1000°F FOR 15 MIN. AT TEMPERATURE. (f)

B - COAT ENTIRE INTERIOR SURFACE WITH ACID-PROOF BLACK PAINT TYPE I OR II.

C - COAT ENTIRE EXTERIOR SURFACE WITH BLUE GRAY LACQUER ENAMEL.

(f) - ALTERNATIVE:- MOUTH ANNEAL BY INDUCTION HEATING



PLUG, BODY 82-2-44E6

STEEL, SHEET, WD1010, COLD-ROLLED TEMPER NO.4 (SOFT SKIN-ROLLED) FINISH NO.1 (DULL)

NOTES:-

D-COAT ENTIRE INTERIOR AND EXTERIOR SURFACES WITH BLUE GRAY LACQUER ENAMEL

REMOVE ALL BURRS.

LIST OF PARTS

LINE NO.	NAME OF PART	NUMBER REQD. PER COMPONENT	PIECEMARK	MATERIAL: SIZE OR FORM	MATERIAL: KIND	MATERIAL: GRADE	MATERIAL: SPECIFICATION NUMBER	APPROX. UNIT WEIGHT (POUNDS)	APPROX. GROSS WT. OF RAW STOCK PER 1000 ASSEMBLIES	REMARKS
1	METAL PARTS ARRANGEMENT		82-2-44 A				AXS-1208			
2										
3										
4	BODY	1	82-2-44 D	STRIP	STEEL-COLD-ROLLED	WD1010	57-136			(c)
5										
6										
7	PLUG, BODY	1	82-2-44 E	SHEET	STEEL, COLD ROLLED	WD1010	57-136			(d)(b)
8										
9										
10	UNION, BODY	1	82-2-44 B	STRIP	STEEL, COLD-ROLLED	WD1010	57-136			(c);
11	UNION, BODY (ALTERNATIVE)		82-2-44 C	STRIP	STEEL, COLD-ROLLED	WD1010	57-136			(c)
12										
13										
14										
15					LACQUER ENAMEL BLUE-GRAY	I	JAN-L-73			(a)
16										
17										
18					VARNISH, PHENOLIC, BAKING	TYPE II	3-221			
19					PAINT, ACID-PROOF BLACK		JAN-P-450			
20										
21										
22										

(a) ALTERNATIVE MATERIAL:-(e) BLUE GRAY ENAMEL, GRADE I, SPEC. JAN-E-74

(b) NOT REQUIRED ON GRENADE, RIFLE, SMOKE, M23A1.

(c) ALTERNATIVE MATERIAL:-(e) STEEL, STRIP, WD1015, COLD-ROLLED, TEMPER NO.5 (DEAD SOFT), FINISH NO.1 (DULL), SPEC 57-136.

(d) ALTERNATIVE MATERIAL:-(e) STEEL, STRIP, WD1015, COLD-ROLLED, TEMPER NO.4 (SOFT SKIN-ROLLED) FINISH NO.1 (DULL), SPEC 57-136.

(e) ALTERNATIVE MATERIALS ARE INTENDED TO BE USED ONLY WHEN PRESCRIBED MATERIALS ARE NOT AVAILABLE.

LIST OF SPECIFICATIONS

LINE NO.		SPECIFICATION NUMBER *	REQUIRED BY
1	AMMUNITION, EXCEPT SMALL ARMS AMMUNITION, GENERAL SPEC. FOR	50-0-1	DRG. 82-2-44
2	ENAMEL, LUSTRELESS, QUICK DRYING.	JAN-E-74	DRG. 82-2-44
3	GRENADE, RIFLE, SMOKE M20 AND M22A1 METAL PARTS FOR	AXS-1208	DRG. 82-2-44
4	LACQUER ENAMEL, LUSTRELESS	JAN-L-73	DRG. 82-2-44
5	GRENADE, RIFLE, SMOKE, STREAMER, M23, METAL PARTS FOR	50-50-10	DRG. 82-2-44
6	METAL, GENERAL SPECIFICATION FOR INSPECTION OF	QQ-M-151	57-136
7	MARKING SHIPMENTS BY CONTRACTORS, STANDARD SPEC FOR	100-2	DWG 82-2-44
8	PAINTS AND RELATED MATERIALS, GENERAL SPEC. FOR	3-1	JAN-L-73
9	PAINT, ACID-PROOF BLACK FOR AMMUNITION -	JAN-P-450	DRG. 82-2-44
10	STEEL, CARBON AND ALLOY; SHEETS AND STRIPS	57-136	DRG. 82-2-44
11			
12	VARNISH, PHENOLIC, BAKING	3-221	DRG. 82-2-44
13			
14	CLEANING & PREPARATION OF METAL SURFACES	JAN-C-490	DRG. 82-2-44
15			
16			

* THE SPECIFICATION NUMBERS SHOWN ARE BASIC NUMBERS ONLY. WHEN A SPECIFICATION IS REVISED, A LETTER IS AFFIXED TO ITS BASIC NUMBER. SPECIFICATIONS REFERRED TO IN THESE SPECIFICATION AND NOT LISTED HEREON, SHALL NOT APPLY.

CLASSIFICATION CHANGED TO UNCLASSIFIED BY AUTHORITY OF OCM 24929 BY LT. COL. [redacted] AUGUST 15, 1945

THIS METAL PARTS ARRANGEMENT IS USED IN THE FOLLOWING:
GRENADE, RIFLE, SMOKE, (COLORED) M22A1
GRENADE, RIFLE, SMOKE, (COLORED) STREAMER - M23A1

[redacted]

GRENADE, RIFLE, SMOKE - METAL PARTS ARRANGEMENT AND DETAILS

FEB. 25, 1944

REVISIONS	
1	APRIL 1944
2	8-31-44
3	11-7-44
4	5-10-45
5	8-15-45
6	6-1-49

CLASS	DIVISION	DRAWING	FILE
82	2	44	

TOLERANCE ON DIMENSIONS NOT OTHERWISE SPECIFIED
DECIMAL ±
FRACTIONAL ±
ANGULAR ±

DFTSMAN G.K. | TRACED G.K. | ORDNANCE ENGINEER [illegible]
CHECKER W.G. | [illegible] | PRINCIPAL ENGINEER [illegible]

SUBMITTED:
H. G. Sommer
CHIEF ENGINEER, ORD. DEPT. U.S.A.

EXAMINED:
H. H. Hollerd
COL, ORD. DEPT. U.S.A.

APPROVED BY ORDER OF THE CHIEF OF ORDNANCE:
J. C. Pinke
COL, ORD. DEPT. U.S.A.

ORDNANCE DEPT. U.S.A.

DRG. PERTAINS TO
75-14-448
75-14-526

SCALE 1, 2

D

LIST OF PARTS

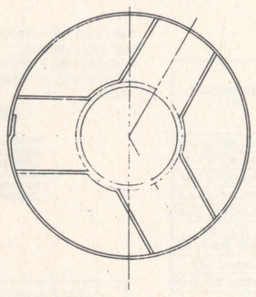
LINE NO	NAME OF PART	NUMBER REQD PER COMPONENT	PIECEMARK	MATERIAL: SIZE OR FORM	MATERIAL: KIND	MATERIAL: GRADE	MATERIAL: SPECIFICATION NO.	APPROX. UNIT WEIGHT (GRAINS)	APPROX GROSS WT OF ITEM INCLUDING ASSEMBLIES	REMARKS
1	ASSEMBLY		82-2-47				AXS-1290	.18 LBS		
2										
3	STABILIZER ASSEMBLY	1	82-2-48A					1271		
4										
5	IGNITING ASSEMBLY		82-2-47B					29.2		
6	CHARGE	1	82-2-47C		POWDER, NON-GASEOUS	TYPE II CLASS A	AXS-1277	4.2		
7	DISC, SEALING	1	82-2-47D	STRIP	PRESSURE SENSITIVE METALLIC ADHESIVE TAPE	COMMERCIAL		.84		
8	HOLDER, IGNITING CHARGE	1	82-2-48F	ROD	BRASS,	COMMERCIAL	QQ-B-611	25.		
9					CELLULOSE NITRATE BINDER					(a)
10										
11										
12										
13										
14										

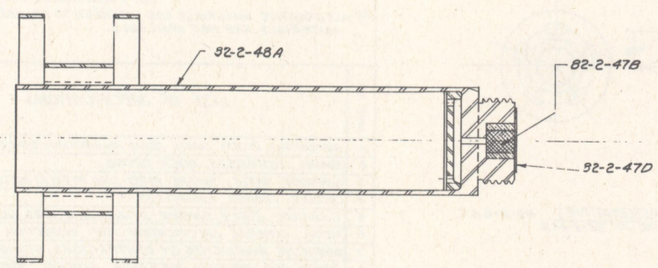
(a) COMPOSITION: (NOTE-A)
CELLULOSE NITRATE_____8% BY WEIGHT (COMMERCIAL)
ACETONE_____92% BY WEIGHT (SPEC. O-A-51A)

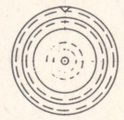
LIST OF SPECIFICATIONS

LINE NO	LIST OF SPECIFICATIONS	SPECIFICATION NUMBER *	REQUIRED BY
1	AMMUNITION, EXCEPT SMALL ARMS AMMUNITION, GENERAL SPEC. FOR	50-0-1	DRG. 82-2-47
2	ACETONE	O-A-51A	DRG. 82-2-47
3			
4	BRASS, COMMERCIAL; BARS, RODS, PLATES, SHAPES, SHEETS AND STRIPS	QQ-B-611	DRG. 82-2-48
5			
6			
7	GRENADE, RIFLE, SMOKE (COLORED) STREAMER M23, LOADING ASS'Y & PACKING	AXS-1290	DRG. 82-2-47
8			
9			
10	METAL, GENERAL SPECIFICATIONS FOR INSPECTION OF	QQ-M-151	QQ-B-611
11			
12			
13	POWDER, NON-GASEOUS	AXS-1277	DRG. 82-2-47
14			

* THE SPECIFICATION NUMBERS SHOWN ARE BASIC NUMBERS ONLY. WHEN A SPECIFICATION IS REVISED A LETTER IS AFFIXED TO ITS BASIC NUMBER. SPECIFICATIONS REFERRED TO IN THESE SPECIFICATIONS AND NOT LISTED HEREON SHALL NOT APPLY.

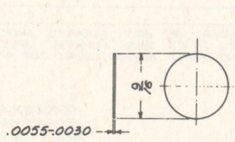




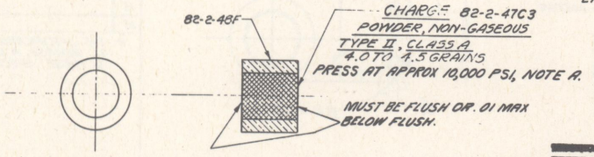


ASSEMBLY 82-2-47A

NOTE-A
USE OF CELLULOSE NITRATE BINDER IS OPTIONAL.
MIX THOROUGHLY IN PROPORTION OF 96 OZ. CHARGE MIXTURE TO 24 OZ. BINDER SOLUTION AND WORK THROUGH SUITABLE SCREENS TO REMOVE ACETONE.



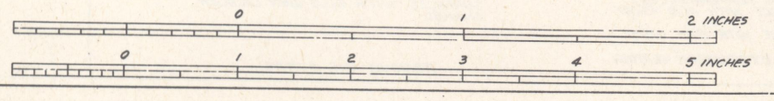
DISC, SEALING 82-2-47D
PRESSURE SENSITIVE METALLIC ADHESIVE TAPE COMMERCIAL
DIAMETER DIMENSION CONTROLS TOOL MANUFACTURE



IGNITING ASSEMBLY 82-2-47B3

CLASSIFICATION CHANGED TO UNCLASSIFIED BY AUTHORITY OF OCM 28152 BY LT. COL. _____ AUGUST 15, 1945

[redacted]



LIST OF DRAWINGS

LINE NO	LIST OF DRAWINGS	DRAWING NUMBER
1	ASSEMBLY	82-2-47
2	DETAILS	82-2-48
3		
4		
5		
6		

NOTE:-
THIS FUZE IS USED IN THE FOLLOWING:
GRENADE, RIFLE, SMOKE (COLORED) STREAMER, M23

STANDARDIZED BY OCM 28152 JUNE 28, 1945

STABILIZER AND FUZE, GRENADE, RIFLE, LOADING ASSEMBLY & DETAILS

APRIL 27, 1945

CLASS	DIVISION	DRAWING	FILE
82	2	47	

REVISIONS

1	8-15-45	
2	10-1-45	
3	3-20-47	

TOLERANCE ON DIMENSIONS NOT OTHERWISE SPECIFIED
DECIMAL ±
FRACTIONAL ±
ANGULAR ±

DRG. PERTAINS TO
88-0-139

D'SMAN	TRACER	ENGINEER
C.B.	K.L.M	
CHECKER		PHYSICIST
T.H		

SUBMITTED:
_____ LT. COL. ORD. DEPT. U.S.A.

EXAMINED:
T.L. Christensen
LT. COL. ORD. DEPT. U.S.A.

APPROVED BY ORDER OF THE CHIEF OF ORDNANCE:
C.S. Reed 4 a.a
COL. ORD. DEPT. U.S.A.

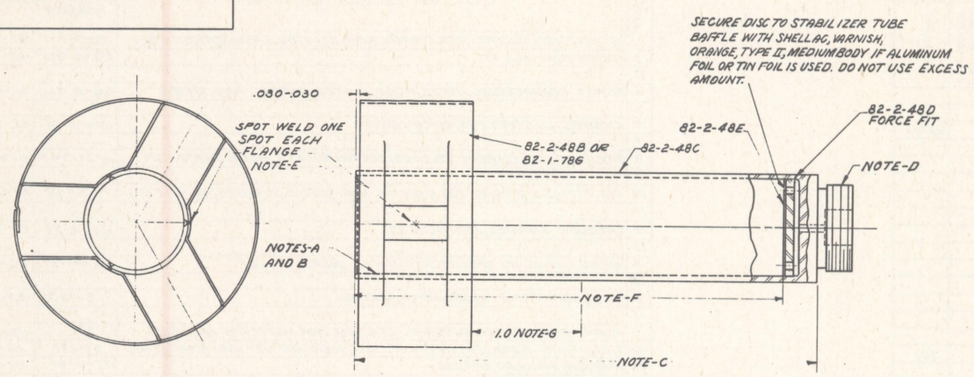
D

ORDNANCE DEPT., U.S.A.

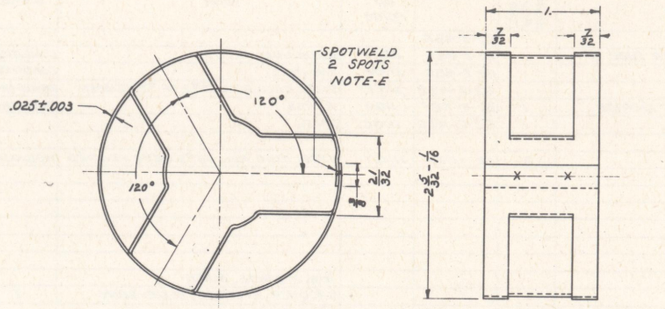
FAH 833

HEAT TREATMENT AND FINAL FINISH

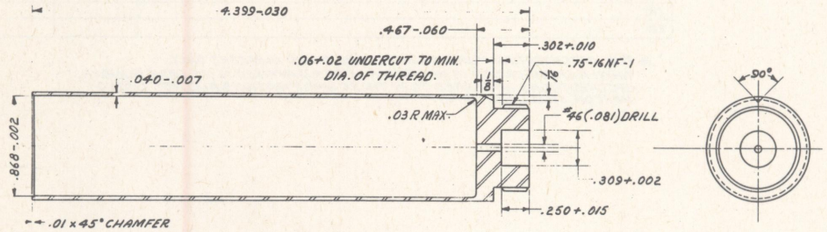
PHYSICAL PROPERTIES	
Y P	
T S	
EL 2	
RED	
BR.	
ROCK	



STABILIZER ASSEMBLY 82-2-48A2

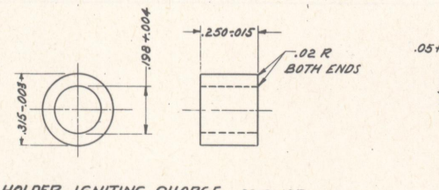


FIN 82-2-48B
STEEL, SHEET, WD 1010 OR WD 1015 COLD ROLLED, NO. 2 OR NO. 3 TEMPER. (DULL OR REGULAR BRIGHT FINISH)

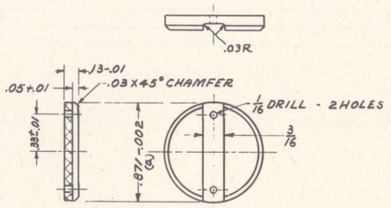


TUBE, STABILIZER 82-2-48C4
STEEL

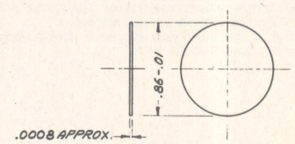
MIN. PHYSICAL PROPERTIES
TENSILE STRENGTH ..... 90,000 P.S.I.
ELONGATION IN 2 INCHES ..... 5% MIN.
YIELD STRENGTH (0.1% OFFSET) 80,000 P.S.I.



HOLDER, IGNITING CHARGE 82-2-48F
BRASS, COMMERCIAL
SHIPPED UNASSEMBLED



BAFFLE, STABILIZER TUBE 82-2-48D3
ALUMINUM-ALLOY-CONDITION "T"
(a) DIMENSION ADVISORY. MUST BE FORCE FIT INTO 82-2-48A



DISC, SEALING 82-2-48E
TIN FOIL, GRADE "B"

THIS STABILIZER IS USED IN THE FOLLOWING; GRENADE, RIFLE, SMOKE, (COLORED), STREAMER, M23

NOTES:-
A-INSIDE OF TUBE MUST BE FREE FROM WELD BURRS. TUBE MAY BE BROACHED WITH BUTTON BROACH HAVING .868 INCH DIA. MAX.
B-APPLY A LIGHT COAT OF LUBRICATING PRESERVATIVE OIL TO INSIDE OF STABILIZER TUBE.
C-PAINT EXTERIOR SURFACES (EXCEPT THREADS) WITH BLUE GRAY LACQUER ENAMEL OR ENAMEL.
D-EXTERIOR THREADS MAY CARRY TRACES OF BLUE GRAY ENAMEL PROVIDING THEY PASS GAGE.
E-EACH SPOTWELD MUST FUZE .007 SQ. INCH MINIMUM AREA.

F-A PLUG GAGE .8642 MIN. DIA. MUST FREELY ENTER TUBE TO THIS DEPTH.
G-STENCIL LOT NUMBER, AFTER PAINTING, WITH 3/16 INCH HIGH LETTERS AND FIGURES LONGITUDINALLY, BEGINNING APPROXIMATELY 1. INCH FORWARD OF FIN.

CLASSIFICATION CHANGED TO UNCLASSIFIED BY AUTHORITY OF OCM 28152 BY LT. COL. [redacted] AUGUST 15, 1945

[redacted]

REMOVE ALL BURRS

SCALE 2/1

STANDARDIZED BY OCM 28152 JUNE 28, 1945

STABILIZER & FUZE, GRENADE, RIFLE, METAL PARTS ASSEMBLY AND DETAILS

APRIL 27, 1945

REVISIONS	
# 1	8-15-45
2	10-1-45
3	1-27-47
4	8-21-47

DRG. PERTAINS TO
82-2-47

CLASS	DIVISION	DRAWING	FILE
82	2	48	

TOLERANCE ON DIMENSIONS NOT OTHERWISE SPECIFIED
DECIMAL ±
FRACTIONAL ± 1/64
ANGULAR ±

DRAFTSMAN	TRACER	ENGINEER
C.W.F.	C.W.F.	
CHECKER		HEAD ENGINEER

SUBMITTED:
LT. COL., ORD. DEPT. U.S.A.

EXAMINED:
LT. COL., ORD. DEPT. U.S.A.

APPROVED BY ORDER OF THE CHIEF OF ORDNANCE:
C.S. Reed by A.A.
COL., ORD. DEPT. U.S.A.

D

ORDNANCE DEPT., U.S.A.

FAM A32

LIST OF PARTS

LINE NO.	NAME OF PART	NUMBER REQ'D PER COMPONENT	PIECEMARK	MATERIAL: SIZE OR FORM	MATERIAL: KIND	MATERIAL: GRADE	MATERIAL: SPEC. NO.	APPROXIMATE UNIT WEIGHT (GRAINS)	APPROX. GROSS WT. OF RAW STOCK PER 1000 ASSEMBLIES	REMARKS
1	ASSEMBLY, STABILIZER		B2-2-48A				AXS.1543	.1BLB.		
2	BAFFLE, STABILIZER TUBE	1	B2-2-48D	BAR	ALUMINUM ALLOY	CONDITION-T	QQ-A-351	51.0		
3	DISC, SEALING	1	B2-2-48E	STRIP	TIN FOIL	CONDITION-B	57-18			(a)(b)
4	FIN	1	B2-2-48B	SHEET	STEEL, COLD ROLLED #2 OR #3 TEMPER	WD1010 OR 1015	57-136	23.0		
5	HOLDER IGNITING CHARGE	1	B2-2-48F	ROD	BRASS	COMMERCIAL	QQ-B-611	25.0		
6	TUBE, STABILIZER	1	B2-2-48C	DISC	STEEL		57-137	1172.0		
7										
8	FIN (ALTERNATIVE)	3	B2-1-78G	SHEET	STEEL, COLD ROLLED #2 OR #3 TEMPER	WD1010 OR 1015	57-186			
9										
10				"						
11										
12										
13										
14										
15					INK, STENCIL, BLACK		TT-I-558			
16					LACQUER ENAMEL, BLUE-GRAY	I	JAN-L-73			(c)
17										
18					OIL, LUBRICATING, PRESERVATIVE, SPECIAL		2-120			
19					VARNISH, SHELLAC, ORANGE	TYPE II MED.	T-T-V-91			(d)
20										
21										
22										
23										
24										
26										
27										

(a) ALTERNATIVE :- ALUMINUM FOIL, COMMERCIAL.
(b) ALTERNATIVE :- PRESSURE SENSITIVE METALLIC ADHESIVE TAPE COMMERCIAL.
(c) ALTERNATIVE :- ENAMEL, BLUE-GRAY, GRADE I, SPEC JAN-E-74
(d) 36% MIN. STICK LAC.

LIST OF SPECIFICATIONS

LINE NO.	LIST OF SPECIFICATIONS	SPECIFICATION NUMBER	REQUIRED BY
1	AMMUNITION, EXCEPT SMALL ARMS AMM, GENERAL SPECIFICATION FOR	50-0-1	B2-2-48
2	ALUMINUM - ALLOY	QQ-A-351	B2-2-48
3			
4	BRASS COMMERCIAL; BARS, RODS, PLATES, SHAPES AND STRIPS	QQ-B-611	B2-2-48
5			
6	ENAMEL, LUSTRELESS, QUICK-DRYING	JAN-E-74	B2-2-48
7			
8	GRENADE, RIFLE, SMOKE, (COLORED) STREAMER M23, METAL PARTS FOR	AXS-1543	B2-2-48
9			
10	INK, STENCIL; OPAQUE, FOR MARKING NON-POROUS SURFACES (METAL, ETC.)	TT-I-558	B2-2-48
11			
12	LACQUER ENAMEL, LUSTRELESS	JAN-L-73	B2-2-48
13			
14	METALS, GENERAL SPECIFICATION FOR INSPECTION OF	QQ-M-151	QQ-A-351
15			
16	OIL, LUBRICATING PRESERVATIVE, SPECIAL	2-120	B2-2-48
17			
18	PAINTS AND RELATED MATERIAL, GEN. SPEC FOR INSPECTION AND TESTS	3-1	JAN-E-74
19	STEEL; PLATE & DISK, FOR CARTRIDGE CASES AND OTHER ARTY AMM COMPONENTS	57-137	B2-2-48
20	VARNISH, SHELLAC, ORANGE	TT-V-91	B2-2-48
21	STEEL, CARBON AND ALLOY; SHEETS AND STRIPS	57-136	B2-2-48
22			
23			
24			
25			
26			
27			
28			
29			

* THE SPECIFICATION NUMBERS SHOWN ARE BASIC NUMBERS ONLY. WHEN A SPECIFICATION IS REVISED A LETTER IS AFFIXED TO ITS BASIC NUMBER. SPECIFICATIONS REFERRED TO IN THESE SPECIFICATIONS AND NOT LISTED HEREON, SHALL NOT APPLY.

CLASSIFICATION CHANGED TO UNCLASSIFIED BY AUTHORITY OF OCM 28132 BY LT. COL. [signature] AUGUST 15, 1945

[redacted]

STANDARDIZED BY OCM 28152 JUNE 28, 1945

STABILIZER AND FUZE, GRENADE, RIFLE, METAL PARTS
LIST OF PARTS & LIST OF SPECIFICATIONS

APRIL 27, 1945

CLASS	DIVISION	DRAWING	FILE
82	2	48A	

REVISIONS

#		
1	8-15-45	
2	8-21-47	

TOLERANCE ON DIMENSIONS NOT OTHERWISE SPECIFIED
DECIMAL ±
FRACTIONAL ±
ANGULAR ±

DRAFTSMAN W.R.T. | TRACER W.R.T. | ENGINEER

CHECKER T.H. | HEAD ENGINEER [illegible]

DRG. PERTAINS TO

SUBMITTED:- [signature] LT. COL. ORD. DEPT. U.S.A.

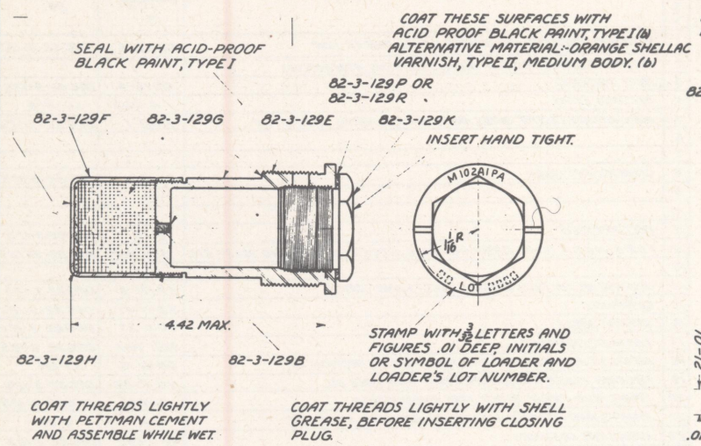
EXAMINED:- [signature] LT. COL., ORD. DEPT., U.S.A.

APPROVED BY ORDER OF THE CHIEF OF ORDNANCE:- C.S. Reed by a.a. COL., ORD. DEPT. U.S.A.

D

ORDNANCE DEPT., U.S.A.

(b) NOT REQUIRED WHEN PARTS ARE PLATED.

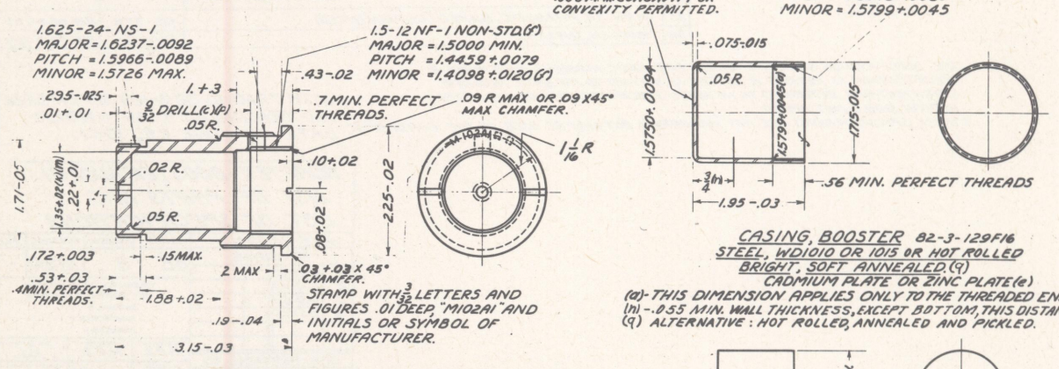


ASSEMBLY 82-3-129A15

NOTE:- PRIOR TO LOADING, GAGE CONCENTRICITY OF BOTH .172 DIA. CLOSING CUP HOLE AND THE 1.35+.02 INSIDE DIAMETER OF ADAPTER WITH 1.5-12NF-1 THREADS, BY MEANS OF A THREADED PLUG GAGE (1.332 DIA.) HAVING A .112 DIA. PIN CONCENTRIC WITH AXIS OF PLUG GAGE.

(c) DRILLED HOLE TOLERANCE TO BE ±.0065
(p) - MAY BE POSITIONED ANYWHERE CIRCUMFERENTIALLY.

2-12-NS-1
MAJOR = 1.9976-.0158
PITCH = 1.9435-.0106
MINOR = 1.8954 MAX.



(t) - TAPER PERMITTED WITHIN TOLERANCE. FINISH INSIDE AND OUTSIDE, BELOW THREADS, MAY BE AS STAMPED, FORGED OR MACHINED FINISH. NORMAL DRAW MARKS PERMITTED.

ADAPTER 82-3-129E16

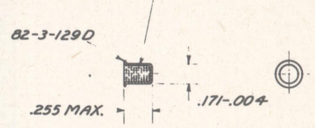
STEEL, WD1010, WD1020, WD1112, WD1115, WDX1314 OR WDX1315, COLD OR HOT DRAWN.
FINISH 3, CADMIUM PLATE OR ZINC PLATE. (e)
ALTERNATIVE CONSTRUCTION:-G.A. 2103.
ALTERNATIVE MATERIAL:-STEEL CASTING, CLASS 2.
ALTERNATIVE MATERIAL:-STEEL FORGING, WD1025 TO WD1035 OR WD1112.

AFTER PAINTING OR PLATING, GAGE CONCENTRICITY OF BOTH THE .172 DIA. CLOSING CUP HOLE AND THE 1.35+.02 I.D. OF ADAPTER WITH 1.5-12 NF-1 THREADS BY MEANS OF A THREADED PLUG GAGE (1.3325 DIA.) HAVING A .112 DIA. PIN CONCENTRIC WITH AXIS OF PLUG GAGE.

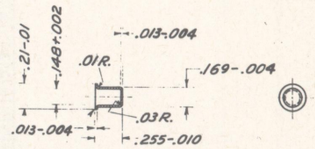
(m) - .005 MAX. OUT OF ROUNDNESS OR DEPRESSIONS DUE TO DRAW MARKS PERMITTED.

CHARGE, CLOSING CUP 82-3-129C12

APPROX. 1.33 GRAINS TETRYL.
PRESS AT 5000 LBS. PER SQ. IN. TO BE FLUSH WITHIN ±.01 INCH.
MAY CONTAIN NOT MORE THAN 2% NATURAL GRAPHITE, GRADE "B."



CLOSING CUP ASSEMBLY 82-3-129B13



FLANGE MAY BE OUT OF ROUND WITHIN THE TOLERANCE ALLOWED.

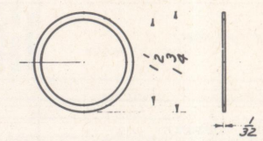
CUP, CLOSING 82-3-129D16

GILDING METAL.

(e) PLATING MAY BE OMITTED FOR WAR PRODUCTION. WHEN OMITTED, USE ONE OF THE FOLLOWING METHODS OF COATING. (h)
1. COAT ALL OVER, EXCEPT THREADS, WITH ACID-PROOF BLACK PAINT, TYPE I. COAT THREADS WITH LUBRICATING OIL.
2. COAT ALL OVER, EXCEPT THREADS, WITH ORANGE SHELLAC VARNISH, TYPE II, MEDIUM BODY. COAT THREADS WITH LUBRICATING OIL.
3. BONDERIZE, PARKERIZE, OR ZINC FLASH ALL OVER AND COAT ALL OVER WITH A MIXTURE OF 50% ACID-PROOF BLACK PAINT, TYPE I, AND 50% SOLVENT.
4. BONDERIZE, PARKERIZE, OR ZINC FLASH ALL OVER AND COAT ALL OVER WITH VARNISH, PHENOLIC, BAKED (UN-PIGMENTED).

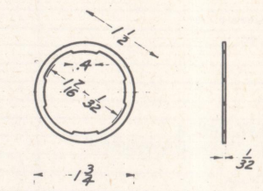
(g) PLATING MAY BE OMITTED FOR WAR PRODUCTION. WHEN OMITTED, USE ONE OF THE FOLLOWING METHODS OF COATING. (h)
1. COAT ALL OVER, EXCEPT THREADS, WITH ACID-PROOF BLACK PAINT, TYPE I. COAT THREADS WITH LUBRICATING OIL.
2. COAT ALL OVER WITH A MIXTURE OF 50% ACID-PROOF BLACK PAINT, TYPE I, AND 50% SOLVENT.
3. COAT ALL OVER, EXCEPT THREADS, WITH ORANGE SHELLAC VARNISH, TYPE II, MEDIUM BODY. COAT THREADS WITH LUBRICATING OIL.
4. COAT ALL OVER WITH VARNISH, PHENOLIC, BAKED (UN-PIGMENTED).

(h) PAINTING OF THREADS PERMITTED PROVIDED METAL PARTS CAN BE FREELY ASSEMBLED AND DISASSEMBLED.



GASKET, PLUG, CLOSING 82-3-129P11

LEATHER, FIBRATED
ALTERNATIVE MATERIAL:-PACKING FIBER (FOR) LUBRICATING AND FUEL OIL.
DIAMETER DIMENSIONS CONTROL TOOL MANUFACTURE.



GASKET, PLUG, CLOSING (ALTERNATIVE) 82-3-129R12

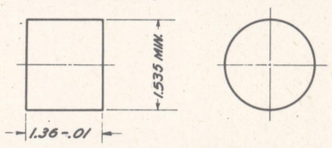
LEATHER, FIBRATED
ALTERNATIVE MATERIAL:- PACKING FIBER (FOR) LUBRICATING AND FUEL OIL.
DIAMETER DIMENSIONS CONTROL TOOL MANUFACTURE

LINE NO.	LIST OF DRAWINGS	DRAWING NUMBER
1	ASSEMBLY	82-3-129
2	LIST OF PARTS AND LIST OF	
3	SPECIFICATIONS	82-3-129A
4	PLUG, CLOSING (ALTERNATIVE)	G.A. 2176
5	PACKING BOX	76-16-172
6	PACKING AND MARKING OF BOX	20-4-157
7	PLUG, CLOSING (ALTERNATIVE)	82-3-356

THIS ADAPTER-BOOSTER IS FOR USE IN THE FOLLOWING BOMBS:-
BOMB, S.A.P., 500 LB., AN-M58.
BOMB, S.A.P., 1000 LB., AN-M59.
BOMB, G.P., 250 LB., AN-M57.
BOMB, LIGHT CASE, 4000 LB., AN-M56.
BOMB, G.P., 100 LB., AN-M30.
BOMB, DEMOLITION, 300 LB., M31.
BOMB, DEMOLITION, 600 LB., M32.
BOMB, DEMOLITION, 1100 LB., M33.
BOMB, G.P., 2000 LB., AN-M34.
BOMB, G.P., 500 LB., AN-M43.
BOMB, G.P., 1000 LB., AN-M44.
WITH TRACING 82-3-129A SUPERSEDES OLD TRACING 82-3-129 UNDER REVISION DATE OF JUNE 25, 1941.

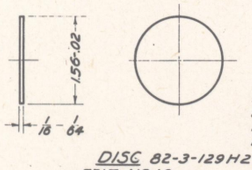
CASING, BOOSTER 82-3-129F16

STEEL, WD1010 OR 1015 OR HOT ROLLED BRIGHT, SOFT ANNEALED. (q)
CADMIUM PLATE OR ZINC PLATE (e)
(d) - THIS DIMENSION APPLIES ONLY TO THE THREADED END.
(n) - .055 MIN. WALL THICKNESS, EXCEPT BOTTOM, THIS DISTANCE.
(q) ALTERNATIVE: HOT ROLLED, ANNEALED AND PICKLED.



PELLET 82-3-129G16

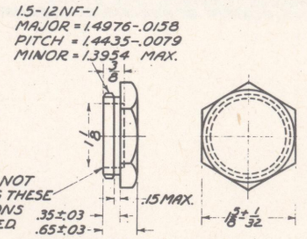
APPROX. 1000 GRAINS TETRYL (.884 GRAINS, MIN.)
SPECIFIC GRAVITY, ALL PLACES, 1.4070 TO 1.55
MAY CONTAIN NOT MORE THAN 2% NATURAL GRAPHITE, GRADE "B."
NUMBER OF PELLETS TO BE GOVERNED BY MANUFACTURER'S EQUIPMENT.



DISC 82-3-129H2

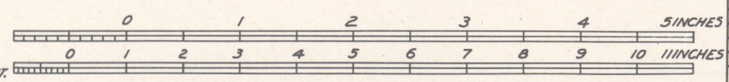
FELT, NO. 10.
DIAMETER DIMENSION CONTROLS TOOL MANUFACTURE.

REMOVE ALL BURRS.



PLUG, CLOSING 82-3-129K14

STEEL, WD1112
FINISH 3, CADMIUM PLATE OR ZINC PLATE. (g)
ALTERNATIVE MATERIAL:-CAST IRON, CLASS 25.
ALTERNATIVE CONSTRUCTION:-G.A. 2176.
ALTERNATIVE CONSTRUCTION:-82-3-356P



ADAPTER-BOOSTER, M102A1 ASSEMBLY AND DETAILS

AUGUST 28, 1934	CLASS	DIVISION	DRAWING	FILE
REVISIONS	82	3	129	

6	4-18-41	12	2-4-43
7	6-25-41	13	3-2-44
8	10-10-41	14	12-9-44
9	11-3-41	15	[illegible]
10	12-28-41	16	8-15-45
11	10-26-42		

TOLERANCE ON DIMENSIONS NOT OTHERWISE SPECIFIED
DECIMAL ±
FRACTIONAL ±
ANGULAR ±

D'FTSMAN	TRACER	L'DG. D'FTSMAN
H.P.Z.	H.P.Z.	K.L.
CHECKER J.R.S.		CHIEF D'FTSMAN

DRG. PERTAINS TO

SUBMITTED:- R. G. Butler Jr. MAJOR, ORD. DEPT., U.S.A.

EXAMINED:- [signature] LT. COL., ORD. DEPT., U.S.A.

APPROVED BY ORDER OF THE CHIEF OF ORDNANCE:- [signature] BRIG. GEN., ORD. DEPT., U.S.A.

D

ORDNANCE DEPT., U.S.A.

LIST OF PARTS

LINE NO	NAME OF PART	NUMBER REQD PER COMPONENT	PIECEMARK	MATERIAL: SIZE OR FORM	MATERIAL: KIND	MATERIAL: GRADE	MATERIAL: SPEC NUMBER	APPROXIMATE UNIT WEIGHT (GRAINS)	APPROX GROSS WT OF RAW STOCK PER UNIT ASSEMBLIES	REMARKS
1	ASSEMBLY		82-3-129A				50-16-3	1.7LBS.		
2										
3	CLOSING CUP ASSEMBLY		82-3-129B					4.53		
4										
5										
6	ADAPTER	1	82-3-129E	PLATE	STEEL	(h)	57-107	7200.		(C)(F)(g)
7										
8										
9	CASING, BOOSTER	1	82-3-129F	STRIP	STEEL	WD1010 OR 1015	57-136	1400.		
10										
11	CHARGE, CLOSING CUP	1	82-3-129C		TETRYL		50-13-4	1.53		
12	CUP, CLOSING	1	82-3-129D	STRIP	GILDING METAL		57-171-2	9.		
13										
14										
15	DISC	1	82-3-129H	ROLL	FELT	NO.10	8-15	6.4		
16										
17	GASKET, PLUG, CLOSING	1	82-3-129P	SHEET	LEATHER, FIBRATED		AXS-744			(a)
18	GASKET, PLUG, CLOSING (ALTERNATIVE)		82-3-129R	SHEET	LEATHER, FIBRATED		AXS-744			(a)
19	PELLET	1	82-3-129G		TETRYL		50-13-4	1000.		
20	PLUG, CLOSING	1	82-3-129K	BAR	STEEL	WD1112	57-107	2300.		(b) (d)
21										
22										
23										
24					CEMENT, PETTMAN		50-11-8			
25										
26										
27					GRAPHITE	"B"	50-11-41			
28										
29										
30					GREASE, SHELL		50-11-37			
31										
32					OIL, LUBRICATING		2-120			
33					PAINT, ACID-PROOF BLACK	TYPE I	3-106			(e)
34										
35										

(a)- ALTERNATIVE MATERIAL -PACKING FIBER (FOR) LUBRICATING AND FUEL OIL, SPEC. HH-P-96.
(b)- ALTERNATIVE MATERIAL -CAST IRON, CLASS 25, SPEC. QQ-I-652.
(C)- ALTERNATIVE CONSTRUCTION -G.A. SKETCH 2103.
(d)- ALTERNATIVE CONSTRUCTION -G.A. 2176.
(e)- ALTERNATIVE MATERIAL -VARNISH, SHELLAC, ORANGE, TYPE II, MEDIUM BODY, SPEC. TT-V-91 OR VARNISH, PHENOLIC, BAKED (UN-PIGMENTED), SPEC. AXS-736.
(f)- ALTERNATIVE MATERIAL:- STEEL CASTING, CLASS II, SPEC., QQ-S-681.
(g)- ALTERNATIVE MATERIAL:- STEEL FORGING, WD1112, WD1025 TO WD1035, SPEC. 57-105.
(h)- STEEL TO BE USED, -WD1010, WD1020, WD1112, WD1115, WDX1314 OR WDX1315, COLD OR HOT DRAWN.

LIST OF SPECIFICATIONS

LINE NO	LIST OF SPECIFICATIONS		SPEC NUMBER *	REQUIRED BY
1	ADAPTER-BOOSTERS FOR BOMBS, METAL PARTS FOR		50-82-2	DRG. 82-3-129
2	ADAPTER BOOSTERS FOR BOMBS, LOADING, ASSEMBLING			
3	AND PACKING		50-16-3	DRG. 82-3-129
4	ALCOHOL, ETHYL		4-1018	50-11-8
5	AMMUNITION, EXCEPT SMALL ARMS AMM., GENERAL SPEC'S. FOR		50-0-1	DRG. 82-3-129
6				
7				
8	CEMENT, PETTMAN		50-11-8	DRG. 82-3-129
9				
10				
11	FELT, PRESSED		8-15	DRG. 82-3-129
12	FORGINGS, LIGHT DROP AND MISC. STEEL CARBON AND ALLOY, ETC.		57-105	DRG. 82-3-129
13				
14	GILDING METAL (95/5 BRASS), SHEETS AND STRIPS		57-171-2	DRG. 82-3-129
15	GRAPHITE		50-11-41	DRG. 82-3-129
16	GREASE, SHELL		50-11-37	DRG. 82-3-129
17	LEATHER, FIBRATED		AXS-744	DRG. 82-3-129
18	METALS; GENERAL SPECIFICATION FOR INSPECTION OF		QQ-M-151	57-136
19	PACKING, FIBER (FOR) LUBRICATING AND FUEL OIL		HH-P-96	DRG. 82-3-129
20	PAINT, ACID-PROOF BLACK, FOR AMMUNITION		3-106	DRG. 82-3-129
21	PAINTS AND RELATED MATERIALS, GENERAL SPEC. FOR		3-1	3-26
22	IRON, GRAY, CASTINGS		QQ-I-652	DRG. 82-3-129
23	OIL, LUBRICATING, PRESERVATIVE, SPECIAL		2-120	DRG. 82-3-129
24	STEEL BARS, CARBON AND ALLOY	*	57-107	DRG. 82-3-129
25	SHELLAC, ORANGE		77-S-271	50-11-8
26	STEEL SHEETS AND STRIPS, CARBON AND ALLOY	*	57-136	DRG. 82-3-129
27	STEEL, CASTINGS		QQ-S-681	DRG. 82-3-129
28				
29				
30	TETRYL		50-13-4	DRG. 82-3-129
31	TAR, PINE		3-26	50-11-8
32	TEXTILES; TEST METHODS		CCC-T-191	8-15
33				
34				
35	VARNISH, PHENOLIC, BAKED (UN-PIGMENTED)		AXS-736	DRG. 82-3-129
36	VARNISH, SHELLAC		TT-V-91	DRG. 82-3-129

* THE SPECIFICATION NUMBERS SHOWN ARE BASIC NUMBERS ONLY. WHEN A SPECIFICATION IS REVISED A LETTER IS AFFIXED TO ITS BASIC NUMBER. SPECIFICATIONS REFERRED TO IN THESE SPECIFICATIONS AND NOT LISTED HEREON, SHALL NOT APPLY.
* THESE SPECIFICATIONS ARE NOT MANDATORY BUT MAY BE USED BY THE CONTRACTOR.

WITH TRACING 82-3-129 SUPERSEDES OLD TRACING 82-3-129 UNDER DATE OF JUNE 25, 1941.

ADAPTER-BOOSTER, M102A1. LIST OF PARTS AND LIST OF SPECIFICATIONS.

JUNE 25, 1941

REVISIONS

1	10-26-42
2	2-4-43
3	3-8-44
4	3-2-45

DRG. PERTAINS TO
82-3-129

CLASS	DIVISION	DRAWING	FILE
82	3	129A	

TOLERANCE ON DIMENSIONS NOT OTHERWISE SPECIFIED
DECIMAL ±
FRACTIONAL ±
ANGULAR ±

D'FTSMAN	TRACER	L'DG D'FTSMAN
H.P.Z.	H.P.Z.	KL
CHECKER J.H.S.		CHIEF D'FTSMAN

SUBMITTED:
R. B. Butler Jr.
MAJOR, ORD. DEPT. U. S. A.

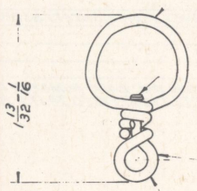
EXAMINED:
L.T. COL. ORD. DEPT. U. S. A.

APPROVED BY ORDER OF THE CHIEF OF ORDNANCE:
BRIG. GEN., ORD. DEPT. U. S. A.

D

ORDNANCE DEPT., U. S. A.

82-3-135B

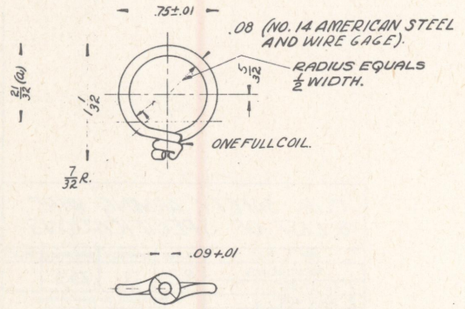


HEAD SUFFICIENT TO STAND MIN. LOAD OF 100 LBS.

MUST TURN FREELY AFTER RIVETING AND PLATING.

82-3-135C

ASSEMBLY 82-3-135A7

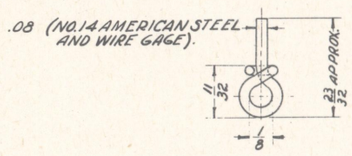


(a) SIDES OF LOOP MUST BE IN ONE PLANE THROUGH THIS DISTANCE.

LOOP 82-3-135B7

STEEL SPRING WIRE,

FORMED LOOP TO WITHSTAND A STEADY NORMAL PULL OF 100 LBS WITHOUT BREAKAGE OR PERMANENT DEFORMATION. HEAT TREATMENT MAY BE NECESSARY TO MEET THIS REQUIREMENT.



SWIVEL 82-3-135C8

STEEL WIRE, FS 1020, SOFT TEMPER, BARE

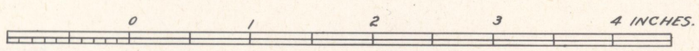
LIST OF PARTS

LINE NO.	NAME OF PART	NUMBER REQ'D PER COMPONENT	PIECE-MARK	MATERIAL: SIZE OR FORM	MATERIAL: KIND	MATERIAL: GRADE	SPEC NO.	APPROX. UNIT WEIGHT (GRAINS)	APPROX. GROSS WT. OF RAW STOCK PER 1000 ASSEMBLIES	REMARKS
1	ASSEMBLY		82-3-135A				50-84-1	55.00		
2										
3										
4	LOOP	1	82-3-135B	WIRE	STEEL		QQ-W-465			(a)
5										
6	SWIVEL	1	82-3-135C	WIRE	STEEL	FS 1020	QQ-W-461			(a)
7										

(a) PROTECTIVE FINISH TYPE I, LS, LSC OR NS, SPEC 57-0-2.

LINE NO.	LIST OF SPECIFICATIONS	SPEC. NUMBER *	REQUIRED BY
1	AMMUNITION, EXCEPT SMALL ARMS AMM., GENERAL SPEC. FOR	50-0-1	DRG. 82-3-135
2	LOOP, SWIVEL, ARMING WIRE	50-84-1	DRG 82-3-135
3			
4			
5	METALS, GENERAL SPECIFICATIONS FOR THE INSPECTION OF	QQ-M-151	QQ-W-461
6	FINISHES, PROTECTIVE, FOR IRON AND STEEL	57-0-2	DRG 82-3-135
7			
8	WIRE, STEEL (CARBON); BARE AND ZINC-COATED	QQ-W-461	DRG. 82-3-135
9	WIRE, STEEL (CARBON); SPRING, HARD-DRAWN	QQ-W-465	DRG. 82-3-135
10			

* THE SPECIFICATION NUMBERS SHOWN ARE BASIC NUMBERS ONLY. WHEN A SPECIFICATION IS REVISED A LETTER IS AFFIXED TO ITS BASIC NUMBER. SPECIFICATIONS REFERRED TO IN THESE SPECIFICATIONS AND NOT LISTED HEREON SHALL NOT APPLY.



SUPERSEDES OLD TRACINGS 82-3-135 AND 82-3-135A, UNDER REVISION DATE OF JANUARY 12, 1932.

LOOP, SWIVEL, ASSEMBLY, LIST OF PARTS, LIST OF SPECIFICATIONS & DETAILS.

JUNE 27, 1929

CLASS	DIVISION	DRAWING	FILE
82	3	135	

REVISIONS

1	1-12-32	7	2-12-47
2	8-15-33	8	5-8-50
3	3-20-35		
4	11-1-41		
5	1-30-42		
6	6-15-43		

TOLERANCE ON DIMENSIONS NOT OTHERWISE SPECIFIED
DECIMAL ±
FRACTIONAL ±
ANGULAR ±

DFTSMAN	TRACER	ENG. IN CHG.
WMR	AJT	

CHECKER	CHECKER	CHIEF DFTSMAN
A.E.R.	V.L.M.	M.T.

DRG. PERTAINS TO

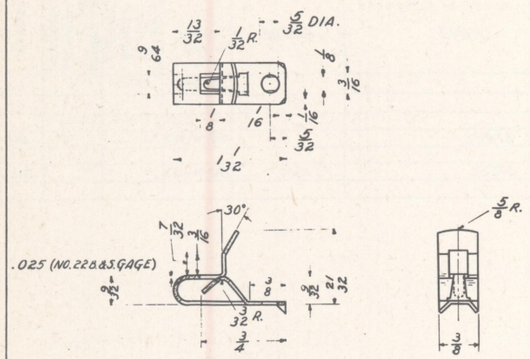
SUBMITTED
LT. COL., ORD. DEPT. U.S.A.

EXAMINED
LT. COL., ORD. DEPT. U.S.A.

APPROVED BY ORDER OF THE CHIEF OF ORDNANCE:
MAJOR, ORD. DEPT. U.S.A.

D

ORDNANCE DEPT., U.S.A.



CLIP, SAFETY, ARMING WIRE 82-3-155A3

PHOSPHOR BRONZE, GRADE "B."

TEMPER TO MEET LOAD REQUIREMENTS OF SPEC. 50-84-2

REMOVE ALL BURRS.

NOTES:-

A COMMERCIAL CLIP, TYPICAL OF THE ABOVE CONSTRUCTION BUT NOT NECESSARILY COMPLYING WITH THE ABOVE DIMENSIONS MAY BE SUBSTITUDED FOR THE CLIP SHOWN, PROVIDED THE REQUIREMENTS OF SPECIFICATIONS 50-84-2 ARE MET.

ALTERNATIVE MATERIAL:- COPPER SILICON ALLOY; CHEMICAL COMPOSITION, CLASS A. PHYSICAL PROPERTIES, EXTRA HARD SIX NUMBERS OR SPRING TEMPER EIGHT NUMBERS, TENSILE STRENTH 99,000 TO 108,000.

LINE NO.	LIST OF SPECIFICATIONS	SPECIFICATION NUMBER *	REQUIRED BY
1			
2			
3	CLIP, SAFETY, ARMING WIRE	50-84-2	DRG. 82-3-155
4	COPPER-SILICON-ALLOY; BARS, PLATES, RODS, SHAPES, SHEETS & STRIPS	QQ-C-591	DRG. 82-3-155
5			
6			
7	PHOSPHOR BRONZE RODS, BARS, SHAPES, PLATES, SHEETS & STRIPS	QQ-B-746	DRG. 82-3-155
8			
9			
10			

* THE SPECIFICATION NUMBERS SHOWN ARE BASIC NUMBERS ONLY. WHEN A SPECIFICATION IS REVISED A LETTER IS AFFIXED TO ITS BASIC NUMBER.

0 1 2 3 4 5 INCHES

CLIP, SAFETY, ARMING WIRE, & LIST OF SPECIFICATIONS

NOV. 7, 1931.

REVISIONS

1	2-27-33
2	10-31-40
3	2-12-47

DRG. PERTAINS TO

CLASS	DIVISION	DRAWING	FILE
82	3	155	

TOLERANCE ON DIMENSIONS NOT OTHERWISE SPECIFIED
DECIMAL ±
FRACTIONAL ±
ANGULAR ±

D'FTSMAN	TRACER	ENGINEER
AKS.	AKS.	JMK.
CHECKER	CHECKER	CHIEF D'FTSMAN
V.L.M.	F.S.	JMK.

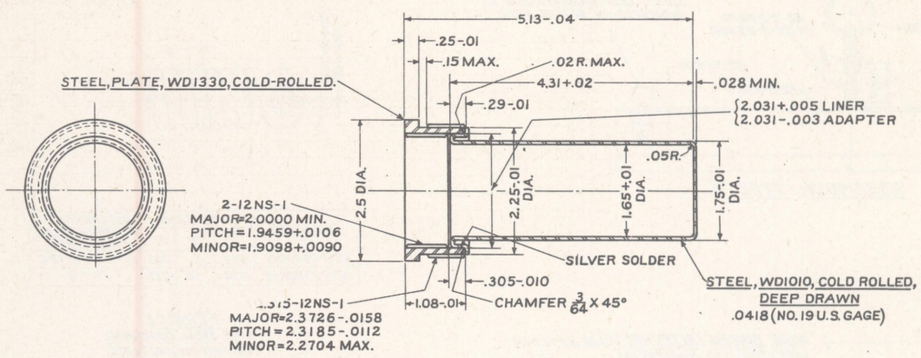
SUBMITTED:- LT. COL., ORD. DEPT. U.S.A.

EXAMINED:- LT. COL., ORD. DEPT. U.S.A.

APPROVED BY ORDER OF THE CHIEF OF ORDNANCE:- MAJOR, ORD. DEPT. U.S.A.

D

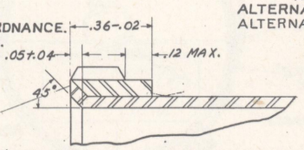
ORDNANCE DEPT. U. S. A.



LINER, ADAPTER-FUZE SEAT 82-3-182L20

A-CADMIUM OR ZINC PLATE PLUS CRONAK. ALL SURFACES MUST BE SMOOTH.
B-SILVER BRAZE WITH SILVER SOLDER, GRADE 4 (.04 MIN. DIA. WIRE X 6.38 LONG).
C-USE SILVER BRAZING FLUX, SPEC. 4-1121.
D-FOR SILVER BRAZING USE INDUCTION HEATING OR METHOD APPROVED BY THE CHIEF OF ORDNANCE.
E-ECCENTRICITY BETWEEN 2-12NS-1 THREADS AND INSIDE OF LINER MUST NOT EXCEED .01.

NOTE:-THIS ADAPTER-FUZE SEAT LINER USED ONLY WITH,
ALTERNATIVE BODY FOR 100 LB., AN-M30A1 BOMB, 82-3-188B.
ALTERNATIVE BODY FOR 250 LB., AN-M57A1 BOMB, 82-3-318F.

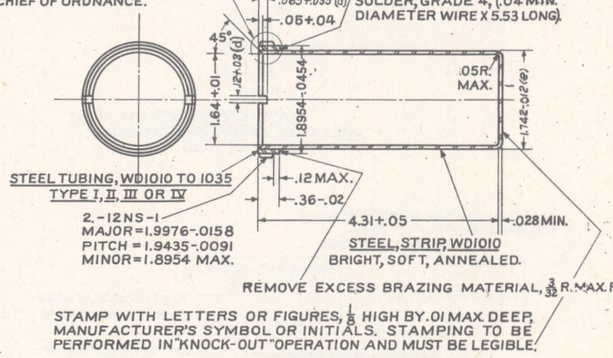


ALTERNATIVE CONSTRUCTION

BEVEL ON COLLAR AND FLANGE ON BODY PERMITTED PROVIDED DIMENSIONS ARE MET.

FOR SILVER BRAZING USE INDUCTION HEATING OR METHOD APPROVED BY THE CHIEF OF ORDNANCE.

USE SILVER BRAZING FLUX, SPEC. 4-1121.



REMOVE EXCESS BRAZING MATERIAL, 3/32 R. MAX. PERMITTED.

STAMP WITH LETTERS OR FIGURES, 1/8 HIGH BY .01 MAX. DEEP, MANUFACTURER'S SYMBOL OR INITIALS. STAMPING TO BE PERFORMED IN "KNOCK-OUT" OPERATION AND MUST BE LEGIBLE.

LINER, FUZE SEAT 82-3-182H22

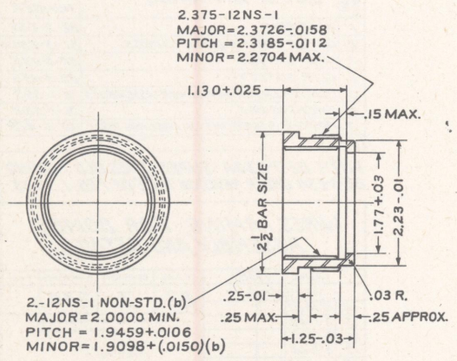
CADMIUM OR ZINC PLATE PLUS CRONAK. ALL SURFACES MUST BE SMOOTH.

ECCENTRICITY BETWEEN 2-12NS-1 THREADS AND INSIDE OF LINER MUST NOT EXCEED .01 WHEN COLLAR OR FLANGE IS SEATED.

LINER MAY BE IN ONE PIECE IN ACCORDANCE WITH DIMENSIONS SHOWN.

(d) WRENCH SLOTS OPTIONAL WHEN FUZE SEAT LINER IS EXPANDED INTO BOMB.

(e) MAY BE 1.76 MAX. FROM BOTTOM OF COLLAR TO WITHIN 2 INCHES FROM OUTSIDE BOTTOM.



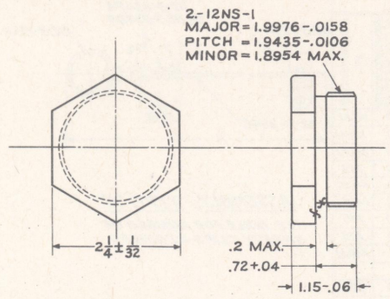
ADAPTER 82-3-182F22

STEEL, COLD ROLLED, WDX1335
FINISH "f"
ALTERNATIVE MATERIAL:-STEEL TUBING, WD1025-1045, TYPE I, II, III OR IV.
ALTERNATIVE MATERIAL:-STEEL, STRIP, WD1025.

MIN. PHYSICAL PROPERTIES

T.S.	85,000	EL.	10%
Y.P.	70,000	RED.	15%

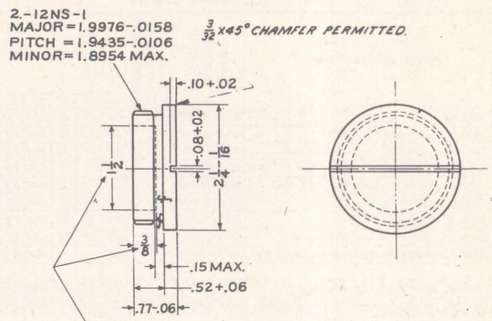
NOTE:-THIS ADAPTER USED ONLY WITH:-
ALTERNATIVE BODY FOR 100 LB., AN-M30A1 BOMB, 82-3-188B.
ALTERNATIVE BODY FOR 250 LB., AN-M57A1 BOMB, 82-3-318F.



PLUG, CLOSING, NOSE 82-3-182D20

STEEL, WD1112, WD1015 TO WD1035 AND WDX1314, HOT ROLLED OR COLD DRAWN
CADMIUM OR ZINC PLATE.(a)
WEIGHT=1.1 LBS.
NOT USED FOR S.A.P. BOMBS.
ALTERNATIVE CONSTRUCTION GA 2422.
ALTERNATIVE MATERIAL:- STEEL FORGING, WD1015 TO WD1035.

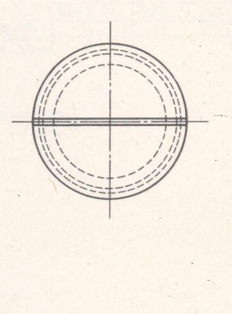
(a)-ALTERNATIVE:- COAT WITH PRIMER, SYNTHETIC, LACQUER-RESISTING, SPEC. 3-183.



PLUG, CLOSING, TAIL 82-3-182E22

STEEL, WD1112
CADMIUM OR ZINC PLATE.(a)
WT. =.66 LBS.
ALTERNATIVE:- CAST IRON, CLASS 25.

THESE DETAILS ARE FOR USE IN THE FOLLOWING BOMBS:-
BOMB, S.A.P., 500 LB., AN-M58A2.
BOMB, G.P., 100 LB., AN-M30A1.



PLUG, CLOSING, TAIL 82-3-182K23

STEEL, WD1112
CADMIUM OR ZINC PLATE (a)
WT. =1.02 LBS.
ALTERNATIVE:-CAST IRON, CLASS 25.

THIS PLUG, CLOSING, TAIL USED ONLY WITH THE
500 LB., G.P. BOMB, AN-M64A1.
1000 LB., G.P. BOMB, AN-M65A1.
2000 LB., G.P. BOMB, AN-M66A1.
500 LB., CHEM. BOMB, M78.
1000 LB., CHEM. BOMB, AN-M79
4000 LB., LIGHT CASE BOMB AN-M56A2.

REMOVE ALL BURRS.

SCALE, INCHES, 1/1.

BOMB, G.P., 2000 LB., AN-M34.
BOMB, G.P., 500 LB., AN-M43.
BOMB, G.P., 1000 LB., AN-M44.
BOMB, LIGHT CASE, 4000 LB., AN-M56A1.
BOMB, G.P., 250 LB., AN-M57A1.
BOMB, S.A.P., 1000 LB., AN-M59A1.
BOMB, G.P., 500 LB., AN-M64A1.
BOMB, G.P., 1000 LB., AN-M65A1.
BOMB, G.P., 2000 LB., AN-M66A1.
BOMB, FRAG., 260 LB., AN-M81.
BOMB, INCENDIARY, 500 LB., AN-M76.
BOMB, CHEM., 500 LB., M78.
BOMB, CHEM., 1000 LB., AN-M79.

SUPERSEDES OLD TRACING 82-3-182.
UNDER REVISION DATE OF MAY 5, 1944.

BOMBS, METAL PARTS DETAILS.

AUGUST 28, 1934	CLASS	DIVISION	DRAWING	FILE
REVISIONS	82	3	182	

18	6-24-43
19	5-5-44
20	12-12-44
21	2-22-45
22	5-11-45
23	5-22-46

TOLERANCE ON DIMENSIONS NOT OTHERWISE SPECIFIED
DECIMAL ±
FRACTIONAL ±
ANGULAR ±

DRG. PERTAINS TO

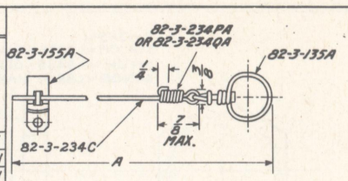
D'FTSMAN R.J.F.M&C. TRACER R.J.F.M&C. ENGINEER
CHECKER NWF SUPERVISING ENGINEER
SUBMITTED: Col., Ord. Dept. U.S.A.
EXAMINED: Col., Ord. Dept. U.S.A.
APPROVED BY ORDER OF THE CHIEF OF ORDNANCE: C. S. Reed 672.4 Col., Ord. Dept. U.S.A.

D

ORDNANCE DEPT., U.S.A.

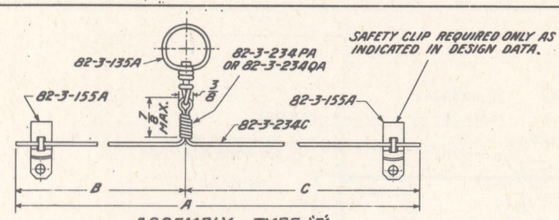
DESIGN DATA

LINE NO.	BOMB DESIGNATION	PIECEMARK OF SHIPPING ASSEMBLY	TYPE OF ARMING WIRE ASSEMBLY USED	DIMENSIONS A	B	C	D	E	F	NUMBER OF SAFETY CLIPS REQUIRED	APPROX. WEIGHT (POUNDS)	NO. OF ARMING WIRE ASSEM. PER PACKING METAL CONTAINER	M DESIGNATION
1	100 LB., M30, DEMO.	82-3-234FB	B	60	27	33	.068	5 1/2	62	2	.08	10	M1A1
2	260LB., AN-M81, FRAG.	82-3-234FB	B	60	27	33	.068	5 1/2	62	2	.08	10	M1A1
3	100LB., AN-M30 & AN-M30A1, G.P.	823-234FB	B	60	27	33	.068	5 1/2	62	2	.08	10	M1A1
4	100 LB., M47A2, M47A3, M47A3C, M47A4 & M47A4C, CHEMICAL	823-234KC	A	28	-	-	.036	5 1/2	28	1	.02	10	M2
5	250LB., AN-M57 & AN-M57A1, G.P.	82-3-234FB	B	60	27	33	.068	5 1/2	62	2	.08	10	M1A1
6	220LB., AN-M88, FRAG.	82-3-234FB	B	60	27	33	.068	5 1/2	62	2	.08	10	M1A1
7	500LB., AN-M43, G.P.	82-3-234HB	B	75	33	42	.068	5 1/2	77	2	.09	10	M5
8	500LB., AN-M76, INCENDIARY	82-3-234HB	B	75	33	42	.068	5 1/2	77	2	.09	10	M5
9	500LB., AN-M58, AN-M58A1 & AN-M58A2, S.A.P.	82-3-234VA	A	48	-	-	.068	5 1/2	48 1/2	1	.06	5	M6A1
10													
11	500LB., AN-M64 & AN-M64A1, G.P.	82-3-234HB	B	75	33	42	.068	5 1/2	77	2	.09	10	M5
12	500LB., M78 & AN-M78, CHEMICAL	82-3-234HB	B	75	33	42	.068	5 1/2	77	2	.09	10	M5
13													
14	125 LB., T3, CHEMICAL	82-3-234FB	B	60	27	33	.068	5 1/2	62	2	.08	10	M1A1
15													
16	100LB. M84 & M84A1 TARGET IDENTIFICATION	82-3-2345	A	26	-	-	.068	4 3/8	26 1/2	0	.04	10	M3
17													
18	250LB., M89, M90 & M90 T.I.	82-3-234RA	A	40	-	-	.036	5 1/2	40 1/2	0	.03	5	M4
19													
20													
21	1000LB., AN-M44, G.P.	82-3-234ZA	B	81 1/2	36 1/2	45	.068	5 1/2	83 1/2	2	.10	5	M7
22													
23	1000LB., AN-M65 & AN-M65A1, G.P.	82-3-234ZA	B	81 1/2	36 1/2	45	.068	5 1/2	83 1/2	2	.10	5	M7
24	1000LB., AN-M79, CHEMICAL	82-3-234ZA	B	81 1/2	36 1/2	45	.068	5 1/2	83 1/2	2	.10	5	M7
25	1000LB., AN-M59 & AN-M59A1, S.A.P.	82-3-234VA	A	48	-	-	.068	5 1/2	48 1/2	1	.06	5	M6A1
26													
27													
28													
29	2000LB., AN-M34, G.P.	82-3-234AB	B	109	49	60	.068	5 1/2	111	2	.13	5	M8
30	2000LB, M103, S.A.P.	82-3-2347C	A	54	-	-	.068	5 1/2	54 1/2	1	.06	5	M9
31	2000LB., AN-M66, AN-M66A1 & AN-M66A2, G.P.	82-3-234AB	B	109	49	60	.068	5 1/2	111	2	.13	5	M8
32													
33	4000LB., AN-M56, AN-M56A1 & AN-M56A2, LC	82-3-234UA	B	130	62	68	.068	5 1/2	132	2	.14	5	M10
34													
35	115 LB., M70, CHEMICAL	82-3-234KC	A	28	-	-	.036	5 1/2	28	1	.02	10	M2
36													

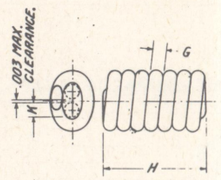


ASSEMBLY, TYPE "A"

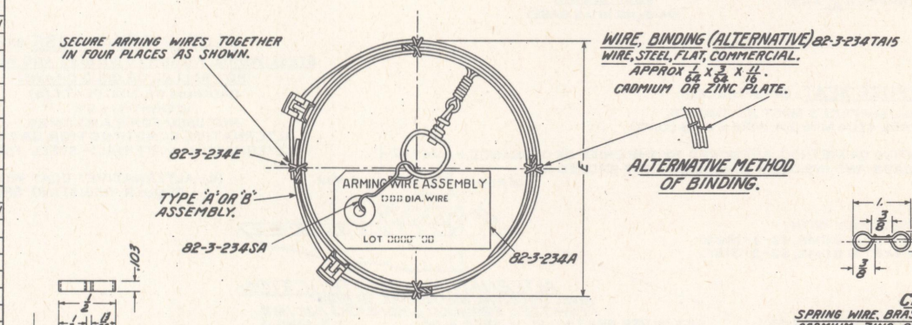
SEE TABLE FOR NUMBER OF SAFETY CLIPS REQUIRED.



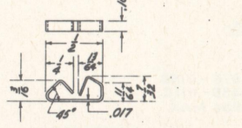
ASSEMBLY, TYPE "B"



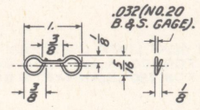
PIECEMARK	DIMENSION G	H	K	ALTERNATIVE NICOPRESS SLEEVE STOCK NUMBER
82-3-234PA15	.062	.5	.066	18-1-C OR 18-12-C
82-3-234QA15	.034	.34	.037	17-1-B



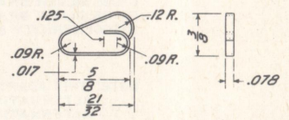
SHIPPING ASSEMBLY



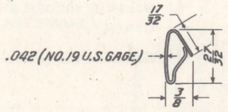
CLIP (ALTERNATIVE) 82-3-234L18
WIRE, STEEL, FLAT, COMMERCIAL
GALVANIZED
SCALE, 2/1



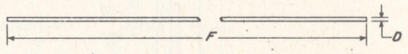
CLIP 82-3-234SA10
SPRING WIRE, BRASS, PHOSPHOR BRONZE OR CADMIUM, ZINC OR COPPER PLATED STEEL, COMMERCIAL.



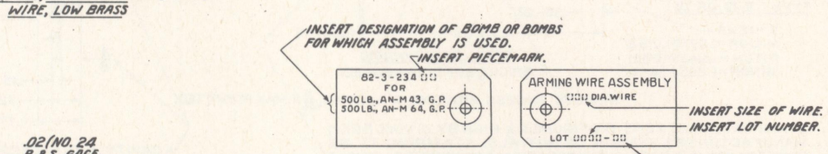
CLIP (ALTERNATIVE) 82-3-234KB13
WIRE, STEEL, FLAT, WD 1010.
GALVANIZED.
SCALE - 2/1



CLIP (ALTERNATIVE) 82-3-234D15
WIRE, STEEL, COPPER COATED, COMMERCIAL.
SNAPLOK OR EQUAL.



WIRE, ARMING 82-3-234C
WIRE, LOW BRASS



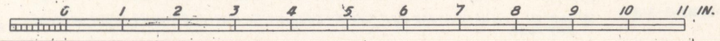
OBVERSE AND REVERSE OF TAG WITH SAMPLE DESIGNATION MARKING.

TAG 82-3-234A15
MANILA PAPER, TYPE "B", SIZE NO. 1.
FIBER CONTENT, 15 JU, 15 WO OR 15 SU. USE PRINTER'S BLACK INK.
SIZE OF TYPE TO BE PROPORTIONED APPROXIMATELY AS SHOWN.

WIRE, BINDING 82-3-234E5
WIRE, MAGNET, BARE.

FERRULE
WIRE, STEEL, COMMERCIAL.
CADMIUM OR ZINC PLATE.
ALTERNATIVE:- NICOPRESS SLEEVE OR EQUAL, FOR ASSEMBLY OF NICOPRESS SLEEVE 18-1-C, USE NICOPRESS TOOL NO. 51-C-887 OR EQUAL. FOR ASSEMBLY OF NICOPRESS SLEEVE 18-12-C, USE NICOPRESS TOOL NO. 31C OR EQUAL. FOR ASSEMBLY OF NICOPRESS SLEEVE 17-1-B, USE NICOPRESS TOOL NO. 17-1 OR EQUAL.

REMOVE ALL BURRS.



LIST OF DRAWINGS

LINE NO.		DRAWING NUMBER
1	ASSEMBLY	82-3-234
2	LIST OF PARTS & LIST OF SPECS.	82-3-234A
3	LOOP, SWIVEL	82-3-135
4	CLIP, SAFETY	82-3-155
5	CONTAINER FOR ARMING WIRE ASSEMBLIES	76-1-393
6	PACKING BOX	76-1-522
7	PACKING & MARKING OF PACKING BOX	20-4-429
8		

WITH 82-3-234A SUPERSEDES OLD TRACING 82-3-234 UNDER REVISION DATE OF FEB. 1, 1943.

WIRES, ARMING, FOR BOMBS. ASSEMBLY AND DETAILS.

JUNE 7, 1938	CLASS	DIVISION	DRAWING	FILE
REVISIONS	82	3	234	

12	12-14-42	
13	2-1-43	
16	7-22-43	
17	4-3-44	
18	4-16-45	
19	8-15-45	

TOLERANCE ON DIMENSIONS NOT OTHERWISE SPECIFIED
DECIMAL ±
FRACTIONAL ±
ANGULAR ±

DRG. PERTAINS TO

DRAFTSMAN C.L.V. | TRACER T. W. R. | ENGINEER

CHECKED NWF | APPROVED

SUBMITTED: A. W. Gallagher, MAJ., ORD. DEPT. U.S.A.

EXAMINED: H. L. Beckman, ORD. DEPT. U.S.A.

APPROVED BY ORDER OF THE CHIEF OF ORDNANCE: [illegible], COL., ORD. DEPT. U.S.A.

D

ORDNANCE DEPT., U.S.A.

LIST OF PARTS

LINE NO.	NAME OF PART	NUMBER REQ'D PER COMPONENT	PIECEMARK	MATERIAL: SIZE OR FORM	MATERIAL: KIND	MATERIAL: GRADE	MATERIAL: SPEC. NUMBER	APPROX. UNIT WEIGHT (POUNDS)	APPROX. GROSS WT. OF RAW STOCK PER 1000 ASSEMBLIES	REMARKS
1	CLIP, SAFETY	c	82-3-155A							
2	CLIP	1	82-3-234SA	WIRE	BRASS, PHOSPHOR BRONZE OR CADMIUM, ZINC OR COPPER PLATED STEEL	SPRING	COMMERCIAL			
3	CLIP (ALTERNATIVE)		82-3-234D	WIRE	COPPER COATED STEEL	SHAPLOCK OR EQUAL	COMMERCIAL			
4	CLIP (ALTERNATIVE)		82-3-234L	FLAT	STEEL WIRE		COMMERCIAL			
5	CLIP (ALTERNATIVE)		82-3-234KB	FLAT	STEEL WIRE	WD 1010	48-5			
6										
7										
8	FERRULE	1	82-3-234FA 82-3-234GA	WIRE	STEEL		COMMERCIAL			a b
9										
10										
11										
12	LOOP, SWIVEL	1	82-3-135A							
13										
14										
15										
16										
17										
18	TAG	1	82-3-234A	SIZE NO. 1	MANILA PAPER	TYPE "B"	UU-T-81			
19										
20										
21	WIRE, ARMING	1	82-3-234C	WIRE	LOW BRASS		57-217			
22	WIRE, BINDING	4	82-3-234E	WIRE	MAGNET WIRE		57-211			
23	WIRE, BINDING (ALTERNATIVE)	4	82-3-234TA	FLAT	STEEL WIRE		COMMERCIAL			
24										
25					INK, PRINTERS BLACK		COMMERCIAL			

a ALTERNATIVE:- NICOPRESS SLEEVE 18-1-C, 18-12-C, OR 17-1-B, AS APPLICABLE OR EQUAL.
b USE FERRULE APPROPRIATE TO ARMING WIRE DIAMETER (SEE DIMENSION "K" IN TABLE)
c SEE DESIGN DATA.

LINE NO.	LIST OF SPECIFICATIONS	SPEC. NUMBER *	REQUIRED BY
1	AMMUNITION, EXCEPT SMALL ARMS AMMUNITION, GENERAL SPEC. FOR	50-0-1	DRG. 82-3-234
2			
3	METALS; GENERAL SPECIFICATION FOR INSPECTION OF	QQ-M-151	57-211
4			
5	PAPER; GENERAL SPECIFICATIONS	UU-P-31	UU-T-81
6			
7	TAGS; SHIPPING AND STOCK	UU-T-81	DRG. 82-3-234
8			
9	WIRE, LOW BRASS	57-217	DRG. 82-3-234
10	WIRE, MAGNET	57-211	DRG. 82-3-234
11	WIRE, SOFT IRON AND STEEL, BARE AND COATED	48-5	DRG. 82-3-234
12			

* THE SPECIFICATION NUMBERS SHOWN ARE BASIC NUMBERS ONLY. WHEN A SPECIFICATION IS REVISED A LETTER IS AFFIXED TO ITS BASIC NUMBER. SPECIFICATIONS REFERRED TO IN THESE SPECIFICATIONS AND NOT LISTED HEREON, SHALL NOT APPLY.

WITH NEW TRACING 82-3-234 SUPERSEDES OLD TRACING 82-3-234 UNDER REVISION DATE OF FEBRUARY 1, 1943.

WIRES, ARMING, FOR BOMBS. LIST OF PARTS & LIST OF SPECIFICATIONS.

FEBRUARY 1, 1943

REVISIONS
1 6-16-45

DRG. PERTAINS TO
82-3-234

CLASS	DIVISION	DRAWING	FILE
82	3	234A	

TOLERANCE ON DIMENSIONS NOT OTHERWISE SPECIFIED
DECIMAL ±
FRACTIONAL ±
ANGULAR ±

D'FTSMAN	TRACER	ENGINEER
T.W.R.	T.W.R.	
CHECKER		ASS'T ENGINEER
NWF		

SUBMITTED:- Dwight Eagle, MAJOR ORD. DEPT. U.S.A.

EXAMINED:- H.C. Beckman, ORD. DEPT. U.S.A.

APPROVED BY ORDER OF THE CHIEF OF ORDNANCE:- [illegible], COL., ORD. DEPT. U.S.A.

D

ORDNANCE DEPT., U.S.A.

LIST OF PARTS

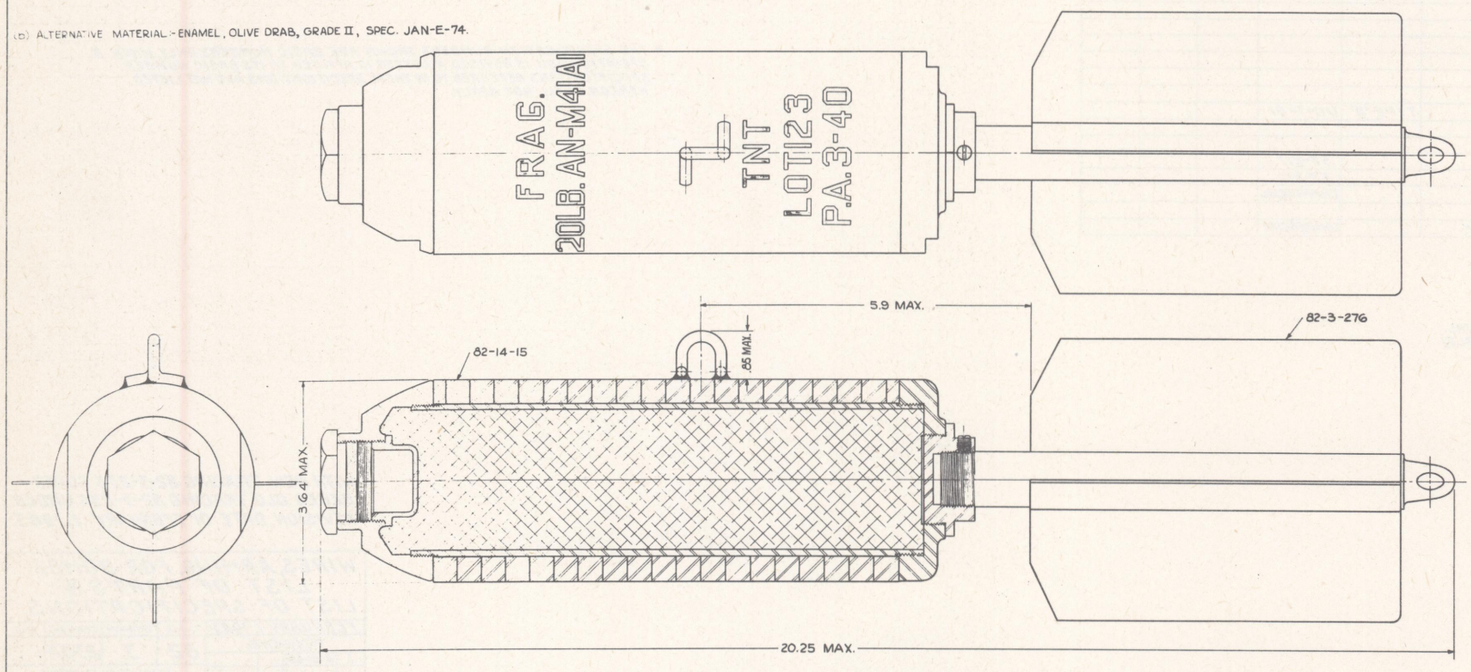
LINE NO.	NAME OF PART	NUMBER REQ'D PER COMPONENT	PIECE - MARK	MATERIAL: SIZE OR FORM	MATERIAL: KIND	MATERIAL: GRADE	MATERIAL: SPEC. NUMBER	APPROXIMATE UNIT WEIGHT (POUNDS)	APPROX. GROSS WT. OF RAW STOCK PER 1000 ASSEMBLIES	REMARKS
	ASSEMBLY		82-3-275A					19.5		
2										
3	FIN ASSEMBLY	1	82-3-276A				50-84-3	1.6		
4										
5	LOADING ASSEMBLY	1	82-14-15A				50-18-1	17.9		
6										
7										
8					LACQUER ENAMEL, OLIVE DRAB	II	JAN-L-73			(b)
9										
10										

(b) ALTERNATIVE MATERIAL:- ENAMEL, OLIVE DRAB, GRADE II, SPEC. JAN-E-74.

LIST OF SPECIFICATIONS

LINE NO.	LIST OF SPECIFICATIONS	SPEC. NUMBER *	REQUIRED BY
1	AMMUNITION, EXCEPT SMALL ARMS AMMUNITION, GENERAL SPEC. FOR	50-0-1	DRG. 82-3-275
2			
3	ENAMEL, LUSTRELESS, QUICK-DRYING	JAN-E-74	DRG. 82-3-275
4	LACQUER ENAMEL, LUSTRELESS	JAN-L-73	DRG. 82-3-275
5			
6	PAINTS AND RELATED MATERIALS, GENERAL SPECIFICATION FOR	3-1	JAN-L-73
7			
8			

* THE SPECIFICATION NUMBERS SHOWN ARE BASIC NUMBERS ONLY. WHEN A SPECIFICATION IS REVISED A LETTER IS AFFIXED TO ITS BASIC NUMBER. SPECIFICATIONS REFERRED TO IN THESE SPECIFICATIONS AND NOT LISTED HEREON, SHALL NOT APPLY.



ASSEMBLY 82-3-275A1

NOTES:-
COAT ALL SURFACES OF FIN ASSEMBLY (EXCEPT THREADS) WITH OLIVE DRAB LACQUER ENAMEL OR OLIVE DRAB ENAMEL (a). FOR PAINTING OF BOMB BODY, SEE DRG. 82-14-15.

(a)- APPLICABLE TO FIN ASSEMBLIES HAVING ONLY A PRIMER COAT.

0 1 2 3 4 5 6 7 8 9 10 11 INCHES

SUPERSEDES OLD TRACING 82-3-275
UNDER REVISION DATE OF APRIL 20, 1944.

BOMB, FRAGMENTATION, 20 LB. AN-M41A1 (WITHOUT FUZING COMPONENTS). ASSEMBLY.

JULY 8, 1940

REVISIONS
1 4-20-44
2 8-15-45

DRG. PERTAINS TO

CLASS	DIVISION	DRAWING	FILE
82	3	275	

TOLERANCE ON DIMENSIONS NOT OTHERWISE SPECIFIED
DECIMAL ±
FRACTIONAL ±
ANGULAR ±

DFTSMAN EWS | TRACER EWS | CHECKER NWF

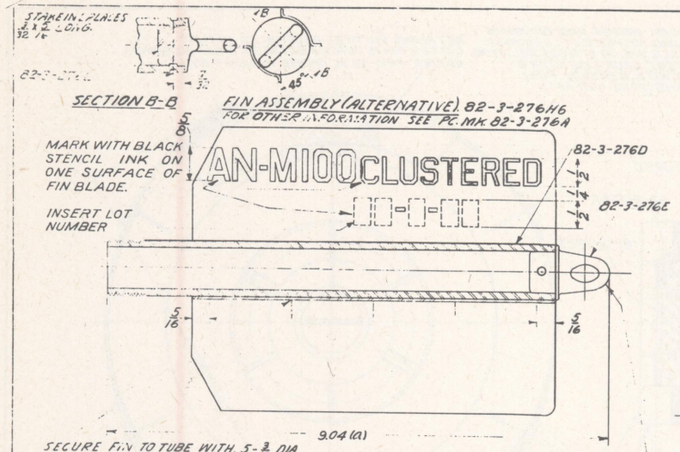
SUBMITTED: [signature] LT. COL., ORD. DEPT.

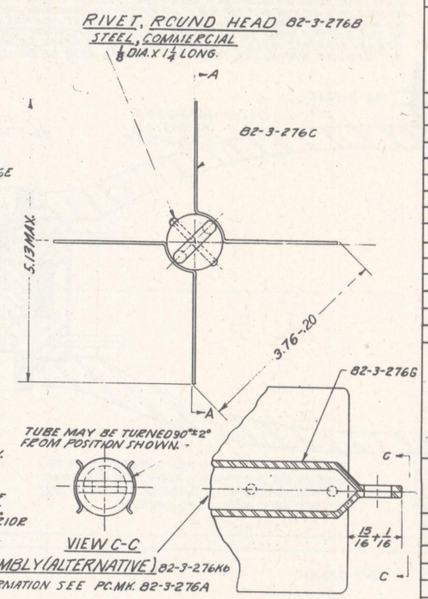
EXAMINED: [signature] CPC DEPT. U.S.A.

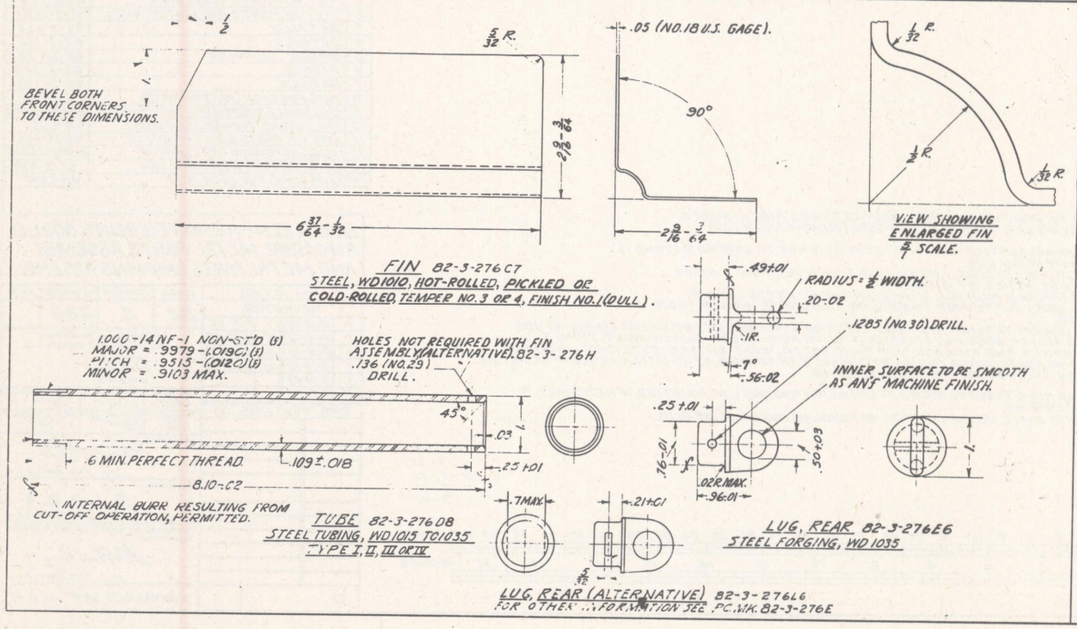
APPROVED BY ORDER OF THE CHIEF OF ORDNANCE: C. S. Rich [signature] COL., ORD. DEPT., U.S.A.

D

ORDNANCE DEPT. U.S.A.







LIST OF PARTS

LINE NO.	NAME OF PART	NUMBER REQ'D PER COMPONENT	PIECE-MARK	MATERIAL: SIZE OR FORM	MATERIAL: KIND	MATERIAL: GRADE	MATERIAL: SPEC. NUMBER	APPROXIMATE UNIT WEIGHT (POUNDS)	APPROX. GROSS WT. OF RAW STOCK PER UNIT ASSEMBLY	REMARKS
1	FIN ASSEMBLY		82-3-276A				50-84-3	1.62		(i)
2	FIN ASSEMBLY (ALTERNATIVE)		82-3-276H							
3	FIN ASSEMBLY (ALTERNATIVE)		82-3-276K							
4										
5	FIN	2	82-3-276C	SHEET	STEEL	WD1010	57-136	.43		
6	LUG, REAR	1	82-3-276E	FORGING	STEEL	WD1035	57-105	.08		(a) (d)
7	LUG, REAR (ALTERNATIVE)		82-3-276L	FORGING	STEEL	WD1035	57-105	.08		(e)
8										
9	RIVET, ROUND HEAD	1	82-3-276B	1/8 DIA X 1 1/4 LONG	STEEL		COMMERCIAL			(c)
10	TUBE	1	82-3-276D	TUBE	STEEL, TYPE I, II, III OR IV	WD1015 TO 1035	57-180	.69		(e)
11	TUBE (ALTERNATIVE)		82-3-276G	TUBE	STEEL, TYPE I, II, III OR IV	WD1015 TO 1035	57-180	.75		
12										
13					INK, STENCIL, BLACK		TT-I-558			
14					PRIMER, SYNTHETIC, LACQUER-RESISTING		JAN-P-72			
15										

(b) ALTERNATIVE CONSTRUCTION:- GA 2384.
(c) NOT REQUIRED WITH ALTERNATIVE ASSEMBLIES.
(d) NOT REQUIRED WHEN LUG, REAR (ALTERNATIVE) 82-3-276L IS USED.
(e) NOT REQUIRED WHEN TUBE (ALTERNATIVE) 82-3-276G IS USED.

THIS FIN ASSEMBLY FOR USE ON THE FOLLOWING BOMBS:-
BOMB, FRAGMENTATION, 20 LB., M41
BOMB, FRAGMENTATION, 20 LB., AN-M41
BOMB, FRAGMENTATION, 20 LB., AN-M41A1

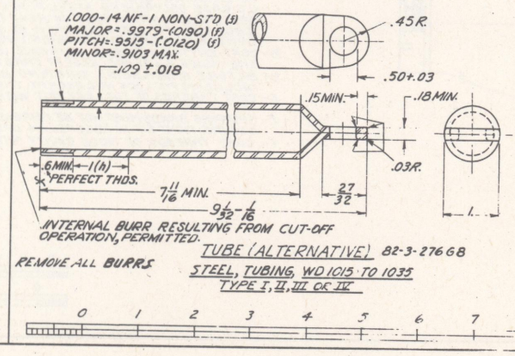
LIST OF SPECIFICATIONS

LINE NO.		SPEC. NUMBER *	REQUIRED BY
1	AMMUNITION, EXCEPT SMALL ARMS AMMUNITION, GENERAL SPEC. FOR	50-0-1	DRG. 82-3-276
2			
3	FIN ASSEMBLIES FOR BOMBS	50-84-3	DRG. 82-3-276
4	FORGINGS, LIGHT, DROP AND MISC., STEEL, CARBON AND ALLOY	57-105	DRG. 82-3-276
5			
6			
7			
8	METALS; GENERAL SPECIFICATION FOR INSPECTION OF	QQ-M-151	57-136
9			
10	INK, STENCIL, OPAQUE FOR MARKING NONPOROUS SURFACES, ETC	TT-I-558	DRG. 82-3-276
11	PRIMER, SYNTHETIC, LACQUER-RESISTING	JAN-P-72	DRG. 82-3-276
12	STEEL SHEETS AND STRIPS, CARBON AND ALLOY	57-136	DRG. 82-3-276
13	TUBING, ROUND, MECHANICAL AND STRUCTURAL, STEEL, CARBON & ALLOY ETC.	57-180	DRG. 82-3-276
14			
15			

* THE SPECIFICATION NUMBERS SHOWN ARE BASIC NUMBERS ONLY. WHEN A SPECIFICATION IS REVISED A LETTER IS AFFIXED TO ITS BASIC NUMBER. SPECIFICATIONS REFERRED TO IN THESE SPECIFICATIONS AND NOT LISTED HEREON, SHALL NOT APPLY.

LIST OF DRAWINGS

LINE NO.		DRAWING NUMBER
1	FIN ASSEMBLY	82-3-276
2	FIN ASSEMBLY (ALTERNATIVE)	GA-2384
3		



(h) A DIAMETER OF .9979-.0190 MUST BE HELD FOR THIS DISTANCE WHEN 3/4 STD PIPE, ONLY, IS USED.

SUPERSEDES OLD TRACING 82-3-276 UNDER REVISION DATE OF JULY 3, 1944.

FIN ASSEMBLY, AN-M100 (CLUSTERED) AND DETAILS.

JULY 8, 1940.

REVISIONS			
5	12-23-43		
6	1-3-44		
7	1-15-45		
8	8-15-45		
9	10-1-45		
10	5-7-47		

DRG. PERTAINS TO	
82-3-275	
P-26252	
82-3-269	
82-3-283	

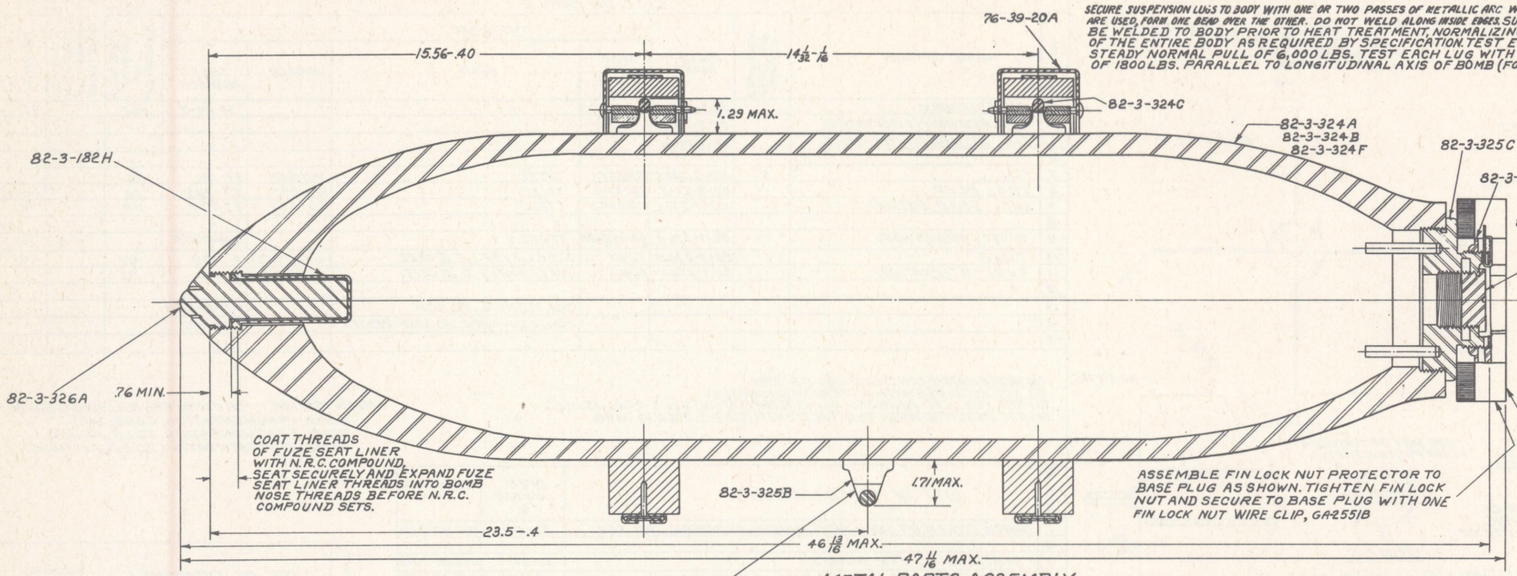
CLASS	DIVISION	DRAWING	FILE
82	3	276	

TOLERANCE ON DIMENSIONS NOT OTHERWISE SPECIFIED
DECIMAL ±
FRACTIONAL ±
ANGULAR ±

DRAWN: W.F.C.
TRACED:
CHECKED: N.W.F
ENGINEER: E.M.C
SUBMITTED: C.A.Y. CO., ORD. DEPT. U.S.A.
EXAMINED: H.K. Beckman, ORD. DEPT. U.S.A.
APPROVED BY ORDER OF THE CHIEF OF ORDNANCE: C.S. Reed, COL., ORD. DEPT. U.S.A.

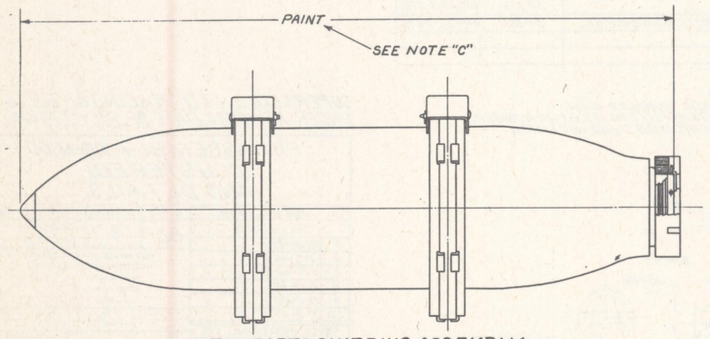
D

ORDNANCE DEPT., U.S.A.



METAL PARTS ASSEMBLY 82-3-323A10

WEIGHT = 399.4 LBS.



METAL PARTS SHIPPING ASSEMBLY.

NOTES:-

A- STAMP ON REAR TAPERED SURFACE OF BODY WITH 1/4 INCH HIGH LETTERS AND FIGURES, "S.A.P." 500 LB. AN-M58A2 MANUFACTURER'S LOT NUMBER AND DATE (MONTH AND YEAR) OF MANUFACTURE.
SAMPLE STAMPING :- "S.A.P. 500 LB. AN-M58A2 PA LOT 1234, 4-41." STAMPING NOT TO EXTEND BEYOND 12 INCHES FROM CENTER OF REAR SUSPENSION LUG.
ALTERNATIVE:- EMBOSS REQUIRED DATA IN LETTERS AND FIGURES 1/4 INCH HIGH ON A NO. 34 U.S. GAGE GALVANIZED STEEL PLATE 5/8 INCHES BY 1/8 INCHES.
ASSEMBLE PLATE TO BODY ON REAR TAPERED SURFACE WITH EIGHT SPOT WELDS (ONE IN EACH CORNER AND 2 ON EACH 5/8 SIDE). PLATE NOT TO EXTEND BEYOND 12 INCHES FROM CENTER OF REAR SUSPENSION LUG.

B- COAT ENTIRE INTERIOR SURFACE, (EXCEPT THREADS) INCLUDING EXTERIOR SURFACE OF FUZE SEAT LINER, STUDS AND INSIDE SURFACE (EXCEPT THREADS) OF BASE PLUG ASSEMBLY WITH ACID-PROOF BLACK PAINT, TYPE I.

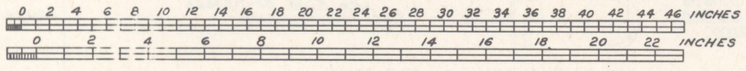
C- BEFORE ASSEMBLING SHIPPING BANDS AND FIN LOCK NUT PROTECTOR, COAT ENTIRE EXTERIOR SURFACE, INCLUDING FIN LOCK NUT, EXCEPT THREADS (CLOSING PLUGS OPTIONAL) WITH PRIMER, SYNTHETIC, LACQUER-RESISTING.

D- COAT THREADS OF FIN LOCK NUT WITH SHELL GREASE BEFORE ASSEMBLING.

E- SHIPPING BANDS MUST NOT BE SPREAD MORE THAN TWO INCHES AT OPEN ENDS AND SHALL BE ADJUSTED, IF NECESSARY, TO SECURE TIGHT FIT IN ASSEMBLING OPERATION.

F- COAT THREADS OF NOSE CAVITY WITH SHELL GREASE PRIOR TO ASSEMBLING NOSE CLOSING PLUG.

11-5-41
11-5-41
11-5-41
11-5-41
11-5-41



LINE NO.	LIST OF DRAWINGS	DRAWING NUMBER
1	METAL PARTS ASSEMBLY	82-3-323
2	LIST OF PARTS AND LIST OF SPEC.	82-3-323A
3	DETAILS	82-3-324
4	DETAILS	82-3-182
5	BANDS, SHIPPING	76-39-20
6	DETAILS	82-3-326
7	DETAILS	82-3-325
8	NUT, FIN LOCK (ALTERNATIVE)	GA-2142
9	LUG, SINGLE SUSPENSION (ALTERNATIVE)	GA-2109 OR GA-2032
10	TAIL, CLOSING PLUG (ALTERNATIVE)	GA-2175
11	LIST OF PARTS & LIST OF SPECS.	76-39-20A
12	LUG, SUSPENSION (ALTERNATIVE).	GA-2232 OR GA-2260
13	PROTECTOR, NUT, FIN LOCK	82-3-427
14	CLIP, WIRE, FIN LOCK NUT	GA-2551

BOMB, SEMI-ARMOR PIERCING, 500 LB., AN-M58A2, METAL PARTS ASSEMBLY AND METAL PARTS SHIPPING ASSEMBLY.

NOV. 10, 1941

REVISIONS				CLASS	DIVISION	DRAWING	FILE
1	12-18-41	7	3-31-45	82	3	323	
2	2-16-42	8	4-25-44				
3	6-18-42	9	6-26-44				
4	10-26-42	10	8-15-45				
5	4-14-43						
6	9-7-43						

TOLERANCE ON DIMENSIONS NOT OTHERWISE SPECIFIED
DECIMAL ±
FRACTIONAL ±
ANGULAR ±

DRG. PERTAINS TO

DFTSMAN	TRACER	ENGINEER
C.B.C.	H.W.K.	
CHECKER	CHECKER	CHIEF DFTSMAN
		M.T.

SUBMITTED:-
Col., ORD. DEPT. U.S.A.

EXAMINED:-
R. B. Ruth, Jr.
MAJ. ORD. DEPT. U.S.A.

APPROVED BY ORDER OF THE CHIEF OF ORDNANCE:-
LT. COL., ORD. DEPT. U.S.A.

D

ORDNANCE DEPT. U.S.A.

RESTRICTED

LIST OF PARTS

LINE NO	NAME OF PART	NUMBER REQ'D PER COMPONENT	PIECE-MARK	MATERIAL: SIZE OR FORM	MATERIAL: KIND	MATERIAL: GRADE	MATERIAL: SPEC. NUMBER	APPROXIMATE UNIT WEIGHT (POUNDS)	APPROX GROSS WT. OF RAW STOCK PER 1000 ASSEMBLIES	REMARKS
1	METAL PARTS ASSEMBLY		82-3-323A				50-71-1, WXS-36 AXS-489	399.4		(c)
2	BASE PLUG ASSEMBLY		82-3-325C					8.66		
3	SHIPPING BAND ASSEMBLY	2	76-39-20A					11.		
4	FIN LOCK NUT ASSEMBLY		82-3-325A					1.13		(n)
5	BODY	1	82-3-324A	FORGING	STEEL		50-71-1	360.4		
6	BODY (ALTERNATIVE)	1	82-3-324F	WELDED	STEEL		WXS-36	360.4		
7	BODY (ALTERNATIVE)		82-3-324B	WELDED	STEEL		AXS-489	360.4		
8	CLIP, WIRE, FIN LOCK NUT	1	GA-2551B		STEEL		COMMERCIAL			(r)
9										
10	STUD	2	82-3-325D	ROD	STEEL		COMMERCIAL	.08		
11										
12	LINER, FUZE SEAT	1	82-3-182H	STRIP&TUBING	STEEL & STEEL TUBING, TYPE I, II, III, OR IV	WD1010 TO 1035	57-136 & 57-180	.37		
13										
14	LUG, SUSPENSION	2	82-3-324C	FORGING	STEEL	WD1030 TO 1035	57-105	.40		(a)
15	LUG, SINGLE SUSPENSION	1	82-3-325B	FORGING	STEEL	WD1025 TO 1035	57-105	.60		(m)
16	NUT, FIN LOCK	1	82-3-324D	FORGING	STEEL	WD1015 TO 1035	57-105	1.05		(e)(p)
17	LUG, FIN LOCK NUT	2	82-3-326B	BAR	STEEL	WD1810, 1015 OR 1020	57-107	.04		
18	PLUG, BASE	1	82-3-324E	FORGING	STEEL	WD1020 TO 1035	57-105	8.5		(d)
19	PLUG, NOSE	1	82-3-326A	FORGING	STEEL	WD 1045	57-105	3.6		(f)(k)
20	PLUG, CLOSING, TAIL	1	82-3-182E	BAR	STEEL	WD 1112	57-107	.66		(k)
21	PROTECTOR NUT, FIN LOCK	1	82-3-427B					.3		
22					FLUX, BRAZING		4-1121			(b)
23										
24					GREASE, SHELL		50-11-37			
25					N.R.C. COMPOUND	"A"	50-11-10			
26					PAINT, ACID-PROOF BLACK	TYPE I & II	3-106			
27										
28										
29					PRIMER, SYNTHETIC LACQUER-RESISTING		3-183			
30										
31					WIRE, WELDING		COMMERCIAL			
32					SOLDER, SILVER	CLASS 4	AXS-741			(b)

(a)- ALTERNATIVE CONSTRUCTION :- GA-2232 OR GA-2260.
(b)- SOLDER, SILVER AND FLUX, BRAZING (FOR SILVER SOLDER) USED ONLY ON FUZE SEAT LINER, 82-3-182H.
(c)- WEIGHT WITHOUT SHIPPING BANDS AND FIN LOCK NUT PROTECTOR = 337.2 LBS.
(d)- ALTERNATIVE MATERIAL :- STEEL CASTING, CLASS 2, 3, OR 4, SPEC. QQ-S-681.
(e)- ALTERNATIVE MATERIAL :- STEEL TUBING, WD1020 TO WD1035, TYPES I, II, III, IV, SPEC. 57-180.
(f)- ALTERNATIVE MATERIAL :- STEEL BAR, WD1045 SPEC. 57-107.
(k)- ALTERNATIVE MATERIAL :- SAME STEEL AS USED IN BOMB BODY.
(k)- ALTERNATIVE MATERIAL :- CAST IRON, CLASS 25, SPEC. QQ-I-652.
(m)- ALTERNATIVE CONSTRUCTION :- G.A. SKETCHES 2109 AND 2032.
(n)- ALTERNATIVE CONSTRUCTION :- G.A. SKETCH 2142.
(p)- ALTERNATIVE CONSTRUCTION MATERIAL : WD1015 TO WD1035 BAR STOCK, SPEC. 57-107
(r)- ALTERNATIVE MATERIAL : WIRE, STEEL (CARBON) SPRING, HARD DRAWN, SPEC. QQ-W-465 (60,000 P.S.I. MIN. TENSILE STRENGTH)

LIST OF SPECIFICATIONS

LINE NO	LIST OF SPECIFICATIONS	SPEC. NUMBER *	REQUIRED BY
1	AMMUNITION, EXCEPT SMALL ARMS AMM., GENERAL SPEC. FOR	50-0-1	DRG 82-3-323
2			
3			
4	BOMBS, G.P. & S.A.P. SEAMLESS, METAL PARTS ASSEMBLY	50-71-1	DRG 82-3-323
5	BOMBS, STEEL, G.P. & S.A.P., BUTT RESISTANCE WELDED, ETC.	AXS 489	DRG 82-3-324
6	BOMBS, STEEL, G.P. & S.A.P., METAL ARC WELDED, ETC.	WXS-36	DRG 82-3-324
7	FLUX, BRAZING (FOR SILVER SOLDER)	4-1121	DRG 82-3-182
8	FORGINGS, LIGHT, DROP AND MISCELLANEOUS, STEEL CARBON & ALLOY ETC.	57-105	DRG 82-3-324
9			
10			
11	GREASE, SHELL	50-11-37	DRG 82-3-323
12			
13			
14	IRON, GRAY, CASTINGS	QQ-I-652	DRG 82-3-182
15	LINER, FUZE SEAT (FOR BOMBS)	50-84-4	DRG 82-3-182
16			
17	METALS; GENERAL SPECIFICATION FOR INSPECTION OF	QQ-M-151	57-136
18	N.R.C. COMPOUND	50-10-11	DRG 82-3 323
19			
20	PAINT, ACID-PROOF BLACK, FOR AMMUNITION	3-106	DRG 82-3-323
21			
22	PRIMER, SYNTHETIC, LACQUER-RESISTING	3-183	DRG. 82-3-323
23			
24	SOLDER, SILVER	AXS-741	DRG 82-3-182
25	STEEL BARS, CARBON AND ALLOY	57-107	DRG 82-3-182
26	STEEL SHEETS AND STRIPS, CARBON AND ALLOY	57-136	DRG 82-3-182
27	STEEL; CASTINGS	QQ-S-681	DRG 82-3-324
28			
29	TUBES, STEEL, STRUCTURAL, WELDED & SEAMLESS, CARBON & ALLOY	57-180	DRG 82-3-182
30	WIRE, STEEL, (CARBON) SPRING, HARD-DRAWN	QQ-W-465	DRG. 82-3-323

* THE SPECIFICATION NUMBERS SHOWN ARE BASIC NUMBERS ONLY. WHEN A SPECIFICATION IS REVISED A LETTER IS AFFIXED TO ITS BASIC NUMBER. SPECIFICATIONS REFERRED TO IN THESE SPECIFICATIONS AND NOT LISTED HEREON, SHALL NOT APPLY.

...VEL STANDARD

11-5-41
11-5-41
11-5-41
11-5-41
11-5-41

BOMB, SEMI-ARMOR PIERCING, 500 LB., AN-M58A2.
LIST OF PARTS AND LIST OF SPECS. FOR METAL PARTS ASSEMBLY.

NOVEMBER 10 1941

REVISIONS			
1	12-18-41	7	3-31-44
2	2-16-42	8	4-25-44
3	6-18-42	9	6-26-44
4	10-26-42	10	8-15-45
5	4-14-43		
6	9-7-43		

DRG. PERTAINS TO
82-3-323

CLASS	DIVISION	DRAWING	FILE
82	3	323A	

TOLERANCE ON DIMENSIONS NOT OTHERWISE SPECIFIED
DECIMAL ±
FRACTIONAL ±
ANGULAR ±

DFTSMAN	TRACER	ENGINEER
CBC	A.S.	
CHECKER	CHECKER	CHIEF DFTSMAN
CB		M.T.

SUBMITTED:-
COL., ORD. DEPT., U.S.A.

EXAMINED:-
MAJ., ORD. DEPT., U.S.A.

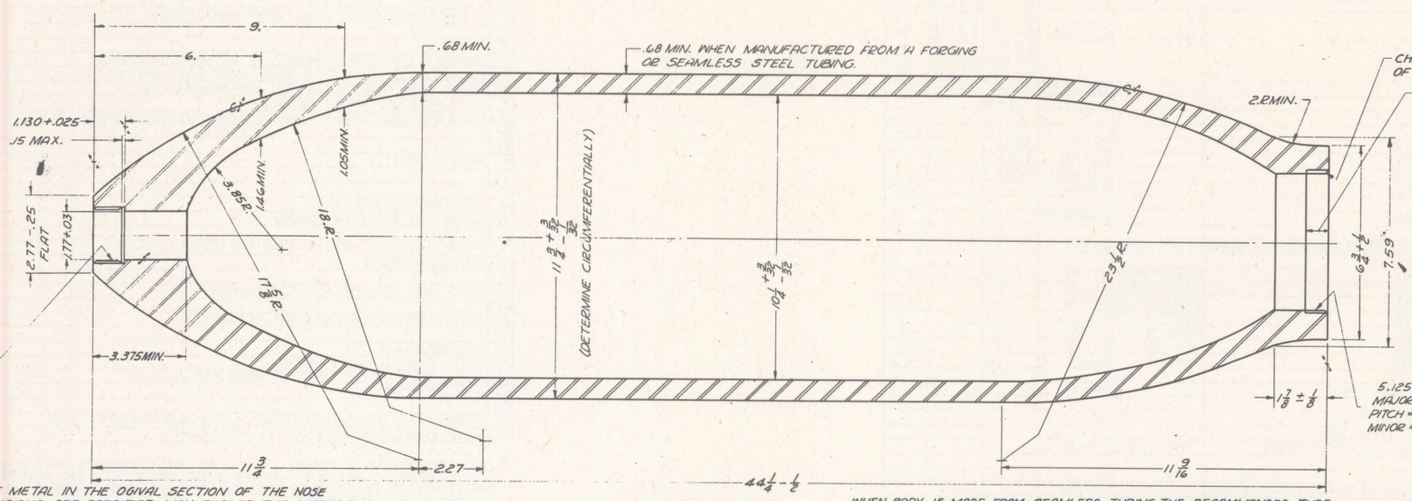
APPROVED BY ORDER OF THE CHIEF OF ORDNANCE:-
LT. COL., ORD. DEPT., U.S.A.

D

ORDNANCE DEPT., U.S.A.

P-82-3-323A

NOTE - OUT OF ROUND TOLERANCE $\frac{1}{8}$ ON DIAMETER.



2.-12NS-1
MAJOR = 2.0000 MIN.
PITCH = 1.9459 +.0106
MINOR = 1.9098 +.0090

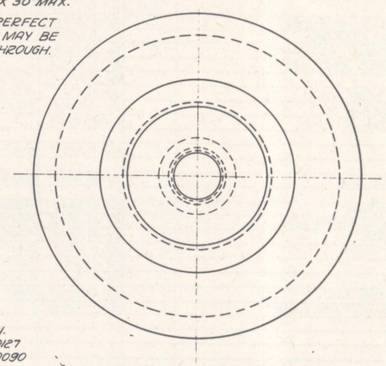
5.125-12NS-1
MAJOR = 5.1250 MIN.
PITCH = 5.0709 +.0127
MINOR = 5.0348 +.0090

BODY (ALTERNATIVE) 82-3-324 B

BUTT RESISTANCE WELDED CONSTRUCTION OF SAME DIMENSIONS AS BODY 82-3-324A. FOR DETAILS OF CONSTRUCTION SEE SPEC. AXS-489. PLATE USED IN CYLINDRICAL SECTION OF BODY TO BE $\frac{3}{4} \pm \frac{1}{32}$ THICK.

CHAMFER REQUIRED, DEPTH OF THREAD X 30° MAX.

.82 MIN. PERFECT THREADS MAY BE TAPPED THROUGH.



±.70 TO BE CONCENTRIC WITHIN .125 T.I.R. INDICATOR READING WITH 5.125-12NS-1 THREADS.

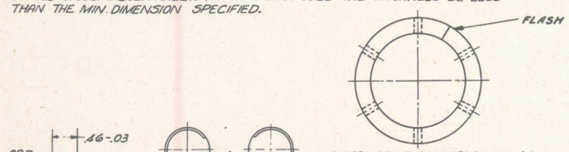
THE THICKNESS OF THE METAL IN THE OGIVAL SECTION OF THE NOSE WHERE ONLY MIN. DIMENSIONS ARE SPECIFIED, MAY EXCEED THE DIMENSIONS BY 20% WHEN TAKEN AS AN AVERAGE OF 3 OR MORE READINGS, EQUALLY SPACED CIRCUMFERENTIALLY. AT NO POINT WILL THE THICKNESS BE LESS THAN THE MIN. DIMENSION SPECIFIED.

BODY 82-3-324 A 9
STEEL FORGING

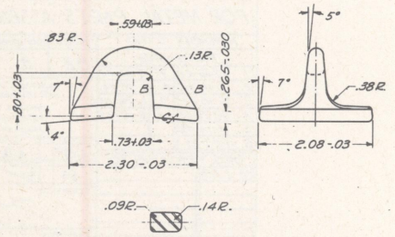
WHEN BODY IS MADE FROM SEAMLESS TUBING THE RECOMMENDED TUBE THICKNESS IS .879 MAX. AND .683 MIN. THICKNESS MUST NOT EXCEED THIS MAXIMUM. MINIMUM TUBE THICKNESS IS ADVISORY ONLY. NO PART ON FINISHED BODY SHALL BE UNDER MINIMUM WALL THICKNESS SPECIFIED ON BODY DRAWING. INSIDE DIAMETER GIVEN ON DRAWING IS NOT APPLICABLE WHEN BODY IS MADE OF SEAMLESS TUBING.

BODY (ALTERNATIVE) 82-3-324 F

METAL ARC WELDED CONSTRUCTION OF SAME DIMENSIONS AS BODY 82-3-324A. FOR DETAILS OF CONSTRUCTION SEE SPEC. WXS-36. PLATE USED IN CYLINDRICAL SECTION OF BODY TO BE $\frac{3}{4} \pm \frac{1}{32}$ THICK. THIS METHOD OF MANUFACTURE TO BE USED ONLY IF SPECIFIED IN CONTRACT.

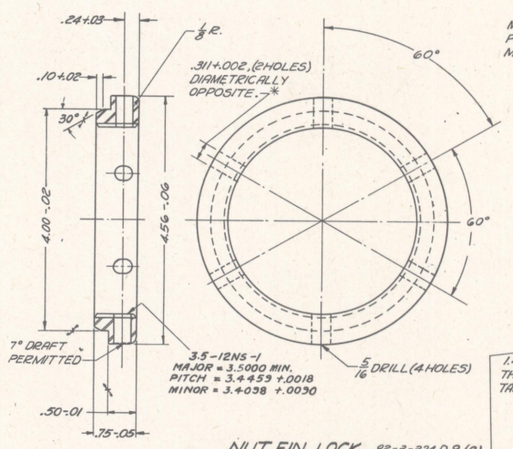


ALTERNATIVE CONSTRUCTION (g)
(g) WD1015 TO WD1035 BAR STOCK, FORMED, FLASH WELDED, AND MACHINED TO DIMENSIONS SHOWN ON 82-3-324D

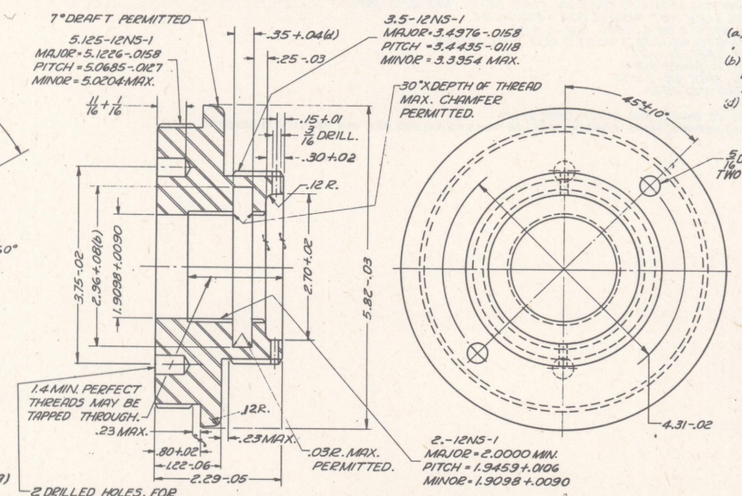


LUG, SUSPENSION 82-3-324 C 6
STEEL FORGING, WD 1030 TO 1035

ALTERNATIVE CONSTRUCTION: - G A 2232 OR 2260.



NUT, FIN LOCK 82-3-324 D 9 (9)
STEEL FORGING, WD 1015 TO 1035
ALTERNATIVE MATERIAL: - STEEL TUBING WD 1020 TO WD 1035 TYPES I, II, III OR IV.



2.-12NS-1
MAJOR = 2.0000 MIN.
PITCH = 1.9459 +.0106
MINOR = 1.9098 +.0090

PLUG, BASE 82-3-324 E B
STEEL FORGING, WD 1020 TO 1035
ALTERNATIVE MATERIAL: - STEEL CASTING CLASS 2, 3 OR 4

MIN. PHYSICAL PROPERTIES

T.S. ___ 70,000	EL. ___ 15%
Y.P. ___ 40,000	RED. ___ 25%

(a) ALIGNMENT OF $\frac{5}{16}$ HOLES WITH $\frac{3}{16}$ HOLES, OPTIONAL.

(b) THE 2.96 +.04 DIA. GROOVE SHALL BE CONCENTRIC WITH 2-12NS-1 INTERNAL THREADS WITHIN .06 DIAL INDICATOR READING (.03 ECCENTRICITY).

(d) TAPER PERMITTED WITHIN TOLERANCE.

[illegible]	11-5-41
[illegible]	11-5-41
[illegible]	11-5-41
[illegible]	11-5-41
[illegible]	11-5-41

REMOVE ALL BURRS.

* MANUFACTURER WILL MARK LOCATION OF .311 HOLES.

(e) ALTERNATIVE: - 2 DRILLED HOLES TAPERED 1/4 INCH PER FOOT OF DIAMETER TO DEPTH SHOWN FOR FORCE FIT OF TAPERED STUDS, 82-3-325D.

SCALE, INCHES, 1, ½

BOMB, SEMI-ARMOR PIERCING, 500 LB., AN-M58A2. METAL PARTS DETAILS.

NOV. 10, 1941

REVISIONS				CLASS	DIVISION	DRAWING	FILE
				82	3	324	
1	12-18-41	7	6-26-44				
2	2-16-42	8	3-23-45				
3	6-18-42	9	8-15-45				
4	10-26-42						
5	6-24-43						
6	4-25-44						

TOLERANCE ON DIMENSIONS NOT OTHERWISE SPECIFIED
DECIMAL ±
FRACTIONAL ±
ANGULAR ±

DRG. PERTAINS TO: 82-3-323

DFTSMAN	TRACER	ENGINEER
C.B.C.	H.W.K.	

CHECKER	CHIEF'S O.K.	CHIEF DFTSMAN
R.J.		M.T.

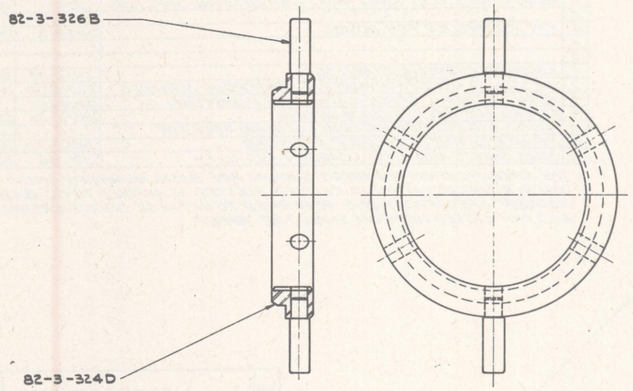
SUBMITTED:- C O L, ORD. DEPT. U. S. A.

EXAMINED:- R. B. Ruth, Jr. MAJ., ORD. DEPT. U. S. A.

APPROVED BY ORDER OF THE CHIEF OF ORDNANCE:- LT. COL, ORD. DEPT. U. S. A.

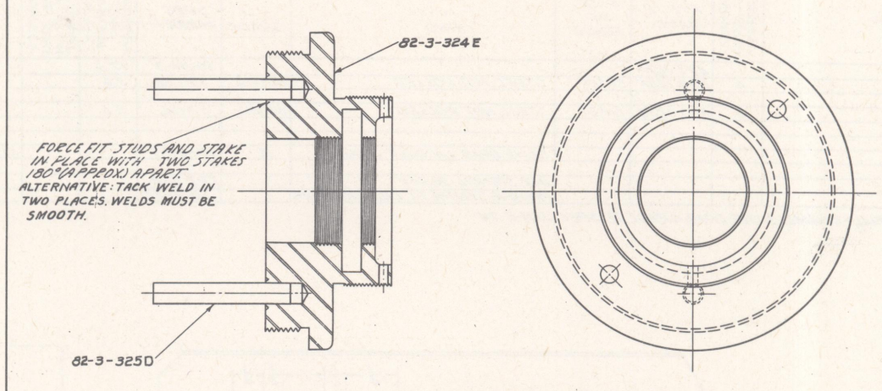
D

ORDNANCE DEPT., U. S. A.

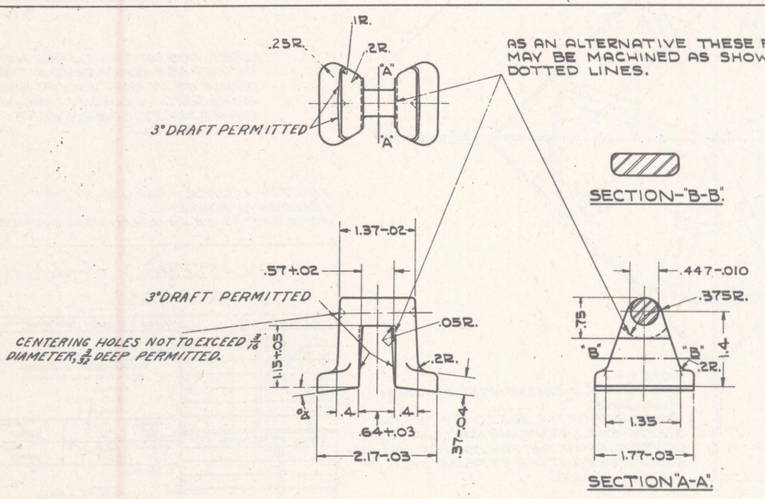


FIN LOCK NUT ASSEMBLY 82-3-325A6

ALTERNATIVE CONSTRUCTION:- GA-2142.



BASE PLUG ASSEMBLY 82-3-325C7

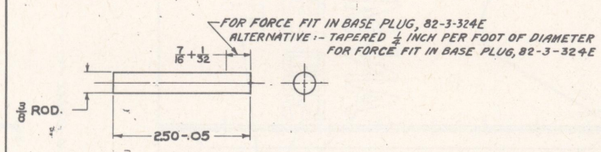


LUG, SINGLE SUSPENSION 82-3-325B7

STEEL, FORGING, WD-1025 TO 1035

ALTERNATIVE CONSTRUCTIONS:-GA 2109 AND 2032.

REMOVE ALL BURRS



STUD 82-3-325D7

STEEL, COMMERCIAL

APPROVED STANDARD

by	Date
[illegible]	11-5-41
[illegible]	11-5-41
[illegible]	11-5-41
[illegible]	11-5-41
[illegible]	11-5-41

NOTICE "THIS DRAWING SHALL NOT BE USED IN CONNECTION EITHER WHOLLY OR IN PART WITH ANY DEPT WORK ALTHOUGH IN CONNECTION WITH UNITED STATES GOVERNMENT CONTRACTS."

0 1 2 3 4 5 6 7 8 9 10 11 IN.

BOMB, SEMI-ARMOR PIERCING 500 LB., AN-M58A2 METAL PARTS DETAILS

NOVEMBER 10, 1941

CLASS	DIVISION	DRAWING	FILE
82	3	325	T

REVISIONS			
1	12-18-41	6	6-26-44
2	1-19-42	7	8-15-45
3	2-16-42		
4	6-18-42		
5	4-25-44		

DRG. PERTAINS TO

D'TSMAN	TRACER	I'DU. D'TSMAN
S.S.D.	S.S.D.	
CHECKER	C.O.	CHIEF D'TSMAN

SUBMITTED:
MAJOR, ORD DEPT. U.S.A.

EXAMINED:
MAJOR, ORD DEPT. U.S.A.

APPROVED BY ORDER OF THE CHIEF OF ORDNANCE:
LT. COL., ORD DEPT. U.S.A.

D

ORDNANCE DEPT. U.S.A.

LIST OF PARTS

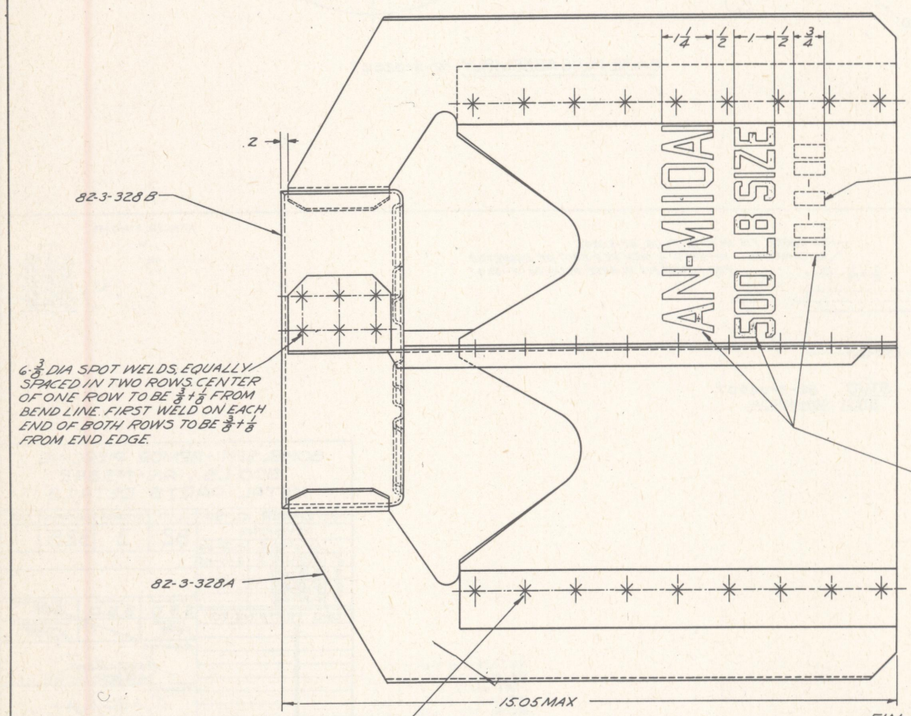
LINE NO	NAME OF PART	NUMBER REQD PER COMPONENT	PIECE MARK	MATERIAL: SIZE OR FORM	MATERIAL: KIND	MATERIAL: GRADE	MATERIAL: SPEC NUMBER	APPROXIMATE UNIT WEIGHT (POUNDS)	APPROX GROSS WT OF RAW STOCK PER 1000 ASSEMBLIES	REMARKS
1	FIN ASSEMBLY		82-3-327A				50-B4-3	17.5		
2	FIN	4	82-3-328A	SHEET	STEEL, HOT ROLLED	WD1010	57-136	3.6		
3										
4	SLEEVE, FIN	1	82-3-328B	SHEET	STEEL, HOT ROLLED	WD1010	57-136	3.1		
5										
6					OLIVE DRAB LACQUER ENAMEL	II	JAN-L-73			(a)
7					INK, STENCIL, BLACK		TT-I-558			
8					PRIMER, SYNTHETIC, LACQUER RESISTING		JAN-P-72			
9										
10										

(a) ALTERNATIVE MATERIAL:- ENAMEL, OLIVE DRAB, GRADE II, SPEC JAN-E-74.

LIST OF SPECIFICATIONS

LINE NO	LIST OF SPECIFICATIONS	SPEC NUMBER *	REQUIRED BY
1	AMMUNITION, EXCEPT SMALL ARMS AMM, GENERAL SPEC FOR	50-0-1	DWG 82-3-327
2			
3	FIN ASSEMBLIES FOR BOMBS	50-B4-3	DWG 82-3-327
4			
5			
6	LACQUER, ENAMEL, LUSTRELESS	JAN-L-73	DWG 82-3-327
7	INK, STENCIL, OPAQUE FOR MARKING NON POROUS SURFACES	TT-I-558	DWG 82-3-327
8	METALS, GENERAL SPECIFICATION FOR INSPECTION OF	QQ-M-151	57-136
9	ENAMEL, LUSTRELESS, QUICK-DRYING	JAN-E-74	DWG 82-3-327
10	PAINTS AND RELATED MATERIALS, GENERAL SPEC FOR	3-1	JAN-L-73
11	PRIMER, SYNTHETIC, LACQUER-RESISTING	JAN-P-72	DWG 82-3-327
12	STEEL, SHEETS AND STRIPS, CARBON AND ALLOY	57-136	DWG 82-3-328

* THE SPECIFICATION NUMBERS SHOWN ARE BASIC NUMBERS ONLY. WHEN A SPECIFICATION IS REVISED A LETTER IS AFFIXED TO ITS BASIC NUMBER. SPECIFICATIONS REFERRED TO IN THESE SPECIFICATIONS AND NOT LISTED HEREON, SHALL NOT APPLY.



NOTES:-
GAGE I.D. OF FIN SLEEVE WITH 7.54 DIA GO PLUG GAGE.
THE PLANE OF THE BOTTOM OF THE FIN SLEEVE SHALL BE PERPENDICULAR TO THE CENTERLINE OF THE FIN BOX WITHIN ⅛ INCH AS MEASURED AT THE EXTREME ENDS OF THE FIN BLADES.

FIN ASSEMBLY 82-3-327A8
COAT ALL SURFACES FIRST WITH PRIMER, SYNTHETIC, LACQUER-RESISTING, THEN WITH OLIVE DRAB, LACQUER ENAMEL OR OLIVE DRAB ENAMEL.

0 1 2 3 4 5 6 7 8 9 10 11 12 13 14 15 INCHES

SUPERSEDES 82-3-327 WITHOUT CHANGE FEB 21, 1949

LIST OF DRAWINGS

LINE NO	LIST OF DRAWINGS	DRAWING NUMBER
1	FIN ASSEMBLY	82-3-327
2	DETAILS	82-3-328
3		
4		
5	PACKING CRATE	76-16-271
6	PACKING AND MARKING OF CRATE	20-4-287
7	PACKING CRATE (ALTERNATIVE)	76-16-305
8	PACKING & MARKING OF CRATE (ALTERNATIVE)	20-4-325

NOTICE: THIS DRAWING SHALL NOT BE USED NOR REPRODUCED EITHER WHOLLY OR IN PART EXCEPT WHEN AUTHORIZED IN CONNECTION WITH UNITED STATES GOVERNMENT PROCUREMENT.

THIS FIN ASSEMBLY FOR USE ON THE FOLLOWING BOMBS:-
BOMB, S.A.P., 500LB, AN-M58, AN-M58A1 & AN-M58A2

FIN ASSEMBLY, AN-M110A1 (500LB SIZE)

NOV. 10, 1941

REVISIONS			
6	8-15-45		
7	5-7-47		
8	2-21-49		

CLASS	DIVISION	DRAWING	FILE
82	3	327	

TOLERANCE ON DIMENSIONS NOT OTHERWISE SPECIFIED
DECIMAL ±
FRACTIONAL ±
ANGULAR ±

DRAFTSMAN	TRACER	ENGINEER
C.B.C.	E.J.S.	

CHECKER	ENGINEER
A.G.J.	

DRG. PERTAINS TO

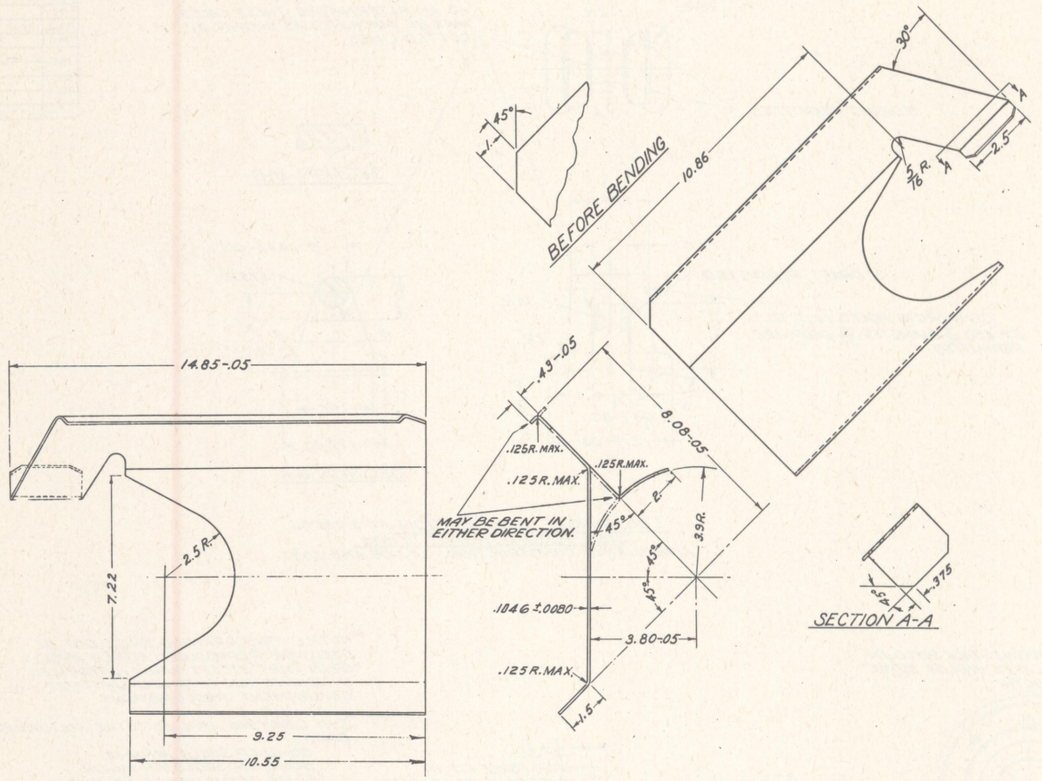
SUBMITTED:-
ORD. ENG., ORD. DEPT. U.S.A.

EXAMINED:-
COL., ORD. DEPT. U.S.A.

APPROVED BY ORDER OF THE CHIEF OF ORDNANCE:-
COL., ORD. DEPT. U.S.A.

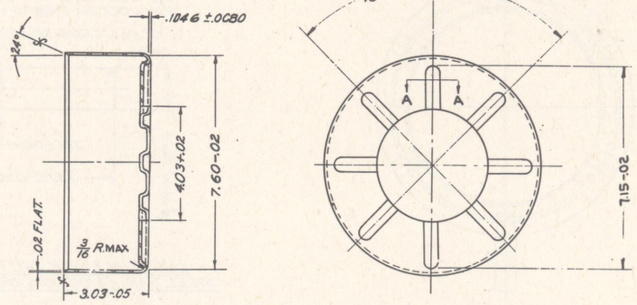
D

ORDNANCE DEPT., U.S.A.



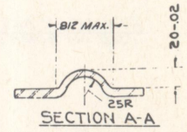
FIN 82-3-328A2

STEEL, WD 1010, HOT ROLLED, PICKLED, OR COLD ROLLED, TEMPER NO. 3, (QUARTER HARD) FINISH NO.1 (DULL)



SLEEVE, FIN 82-3-328B2

STEEL, WD 1010 HOT ROLLED, ANNEALED AND PICKLED; OR COLD ROLLED, TEMPER NO. 4, (SOFT SKIN-ROLLED), FINISH NO.1 (DULL) OR NO.2 (REGULAR BRIGHT)



REMOVE ALL BURRS.

SCALE, INCHES 1/2

FIN ASSEMBLY, AN-M11DA1 (500 LB. SIZE), DETAILS

NOV. 10, 1941	CLASS	DIVISION	DRAWING	FILE
REVISIONS	82	3	328	

1	6-18-42	
2	11-30-44	
3	8-15-45	
4	5-7-47	

SYMBOL

D'FTSMAN	TRACER	ENGINEER
C.B.C.	E.H.B.	

CHECKED	CHECK'R	CHIEF D'FTSMAN
		M.T.

DRG. PERTAINS TO 82-3-327

SUBMITTED:-
COL., ORD. DEPT. U.S.A.

EXAMINED:-
R. L. Bullis Jr.
MAJ., ORD. DEPT. U.S.A.

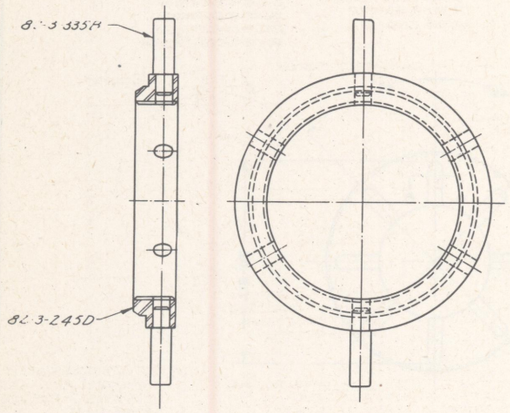
APPROVED BY ORDER OF THE CHIEF OF ORDNANCE:-
LT. COL., ORD. DEPT. U.S.A.

D

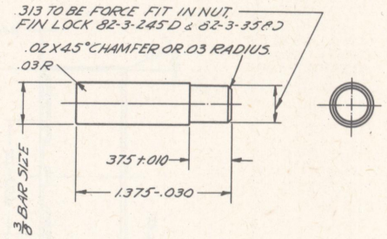
ORDNANCE DEPT. U. S. A.

HEAT REATMENT AND FINAL FINISH

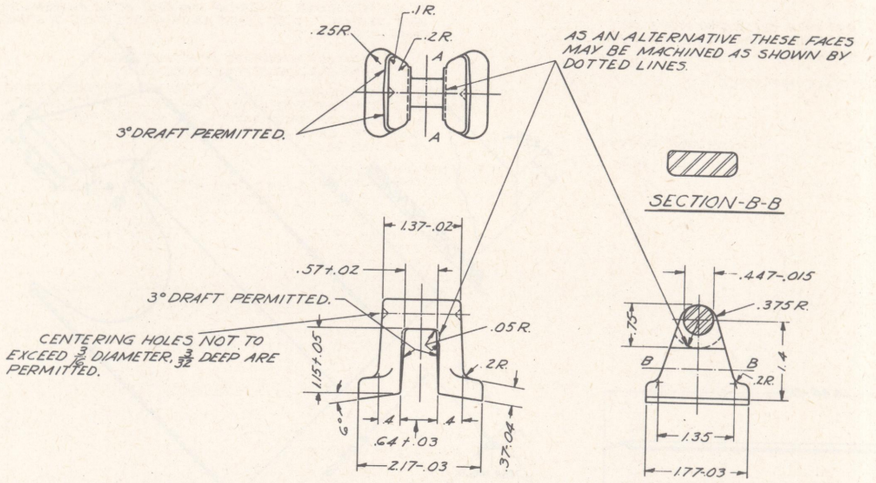
PHYSICAL PROPERTIES	
Y.P.	
T.S.	
EL. 2	
RED.	
BR.	
ROCK	



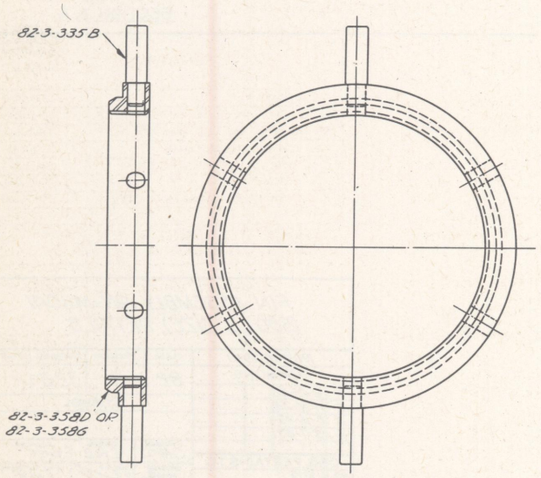
FIN LOCK NUT ASSEMBLY 82-3-335A3
USED ON BOMB, G.P. 500LB. AN-M43



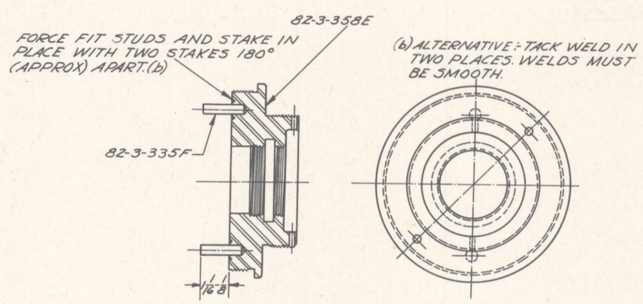
LUG, FIN LOCK NUT 82-3-335B7
STEEL, BAR, F51010, 1015 OR 1020 COLD-DRAWN



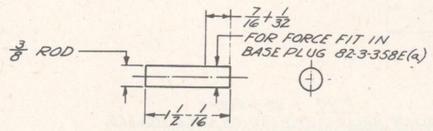
LUG, SINGLE SUSPENSION 82-3-335C6
STEEL, FORGING, WD1025 TO 1035
ALTERNATIVE CONSTRUCTION:- GA 2109 AND 2032



FIN LOCK NUT ASSEMBLY 82-3-335D6
USED ON BOMBS, G.P. 500LB, AN-MG4A1: CHEM, 500LB, AN-M78 & INCENDIARY, 500LB, AN-M76.
ALTERNATIVE CONSTRUCTION:- GA-2135



BASE PLUG ASSEMBLY 82-3-335E6
USED ON BOMB. G.P. 500LB., AN-MG4A1.



STUD 82-3-335F6
STEEL, COMMERCIAL

(a) ALTERNATIVE: END TAPERED 1/4 INCH PER FOOT OF DIAMETER, TO BE USED FOR FORCE FIT IN BASE PLUG 82-3-358E, HAVING TAPERED STUD HOLES.

REMOVE ALL BURRS.

SCALE, INCHES, 1, 1/2, 1/2

NOTICE - THIS DRAWING SHALL NOT BE USED NOR REPRODUCED EITHER WHOLLY OR IN PART EXCEPT WHEN AUTHORIZED IN CONNECTION WITH UNITED STATES GOVERNMENT PROCUREMENT.

THIS DRAWING APPLIES TO THE FOLLOWING BOMBS:-
BOMB, G.P. 500LB, AN-M43.
BOMB, G.P. 500LB, AN-MG4A1.
BOMB, INCENDIARY 500LB, AN-M76.
BOMB, CHEMICAL, 500LB, AN-M78.

BOMBS, METAL PARTS DETAILS.

NOVEMBER 10, 1941

REVISIONS					
6	8-15-43				
7	2-21-49				

DRG. PERTAINS TO

CLASS	DIVISION	DRAWING	FILE
8Z	3	335	

TOLERANCE ON DIMENSIONS NOT OTHERWISE SPECIFIED
DECIMAL ±
FRACTIONAL ±
ANGULAR ±

DFTSMAN	TRACED	ENGINEER
S.S.D.	E.V.S.	
CHECKER		ENGINEER
AGJ		

SUBMITTED:-
ORD. ENG. ORD DEPT U.S.A.

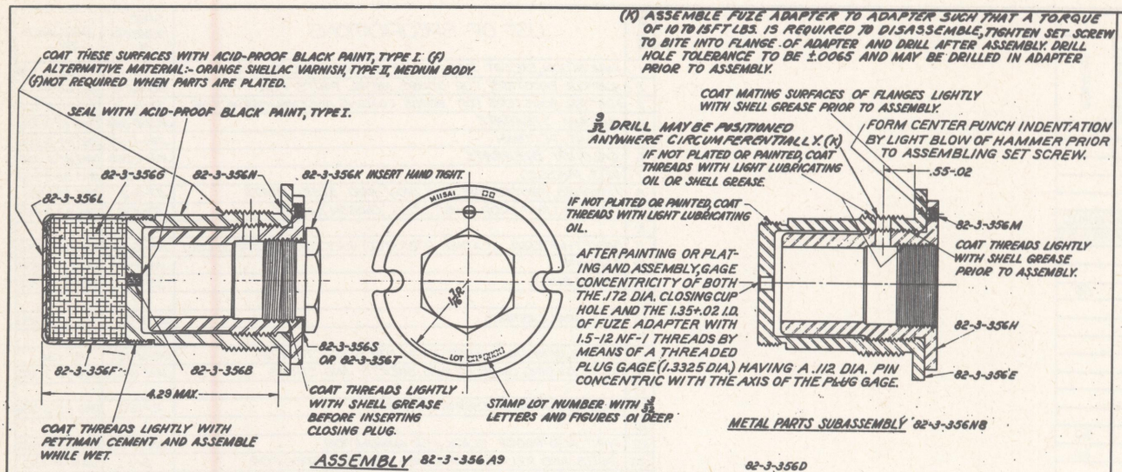
EXAMINED:-
Col., ORD. DEPT U.S.A.

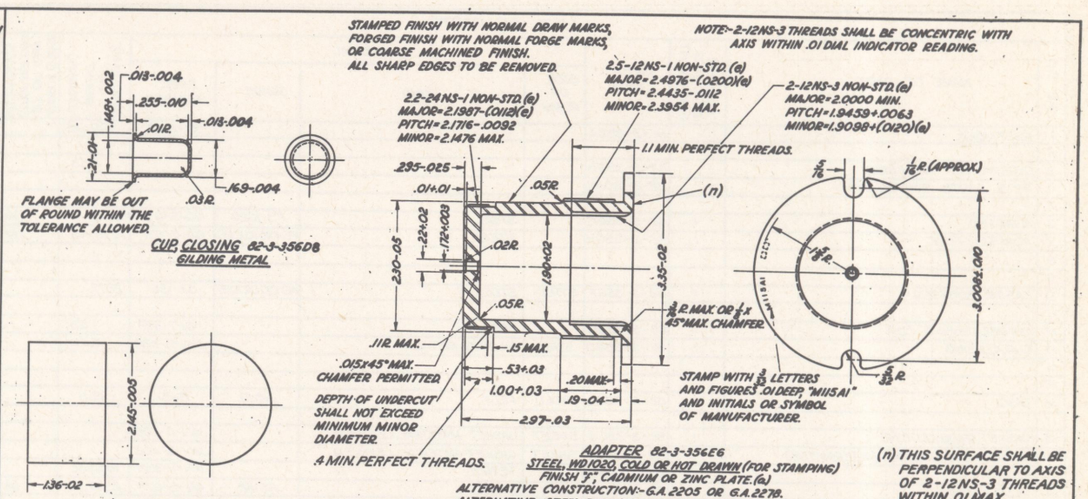
APPROVED BY ORDER OF THE CHIEF OF ORDNANCE:-
Col., ORD. DEPT U.S.A.

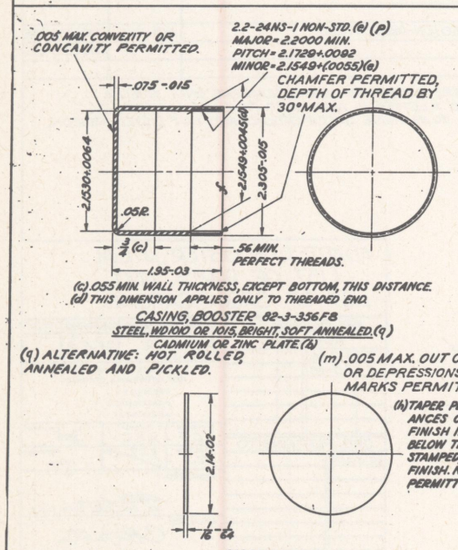
D

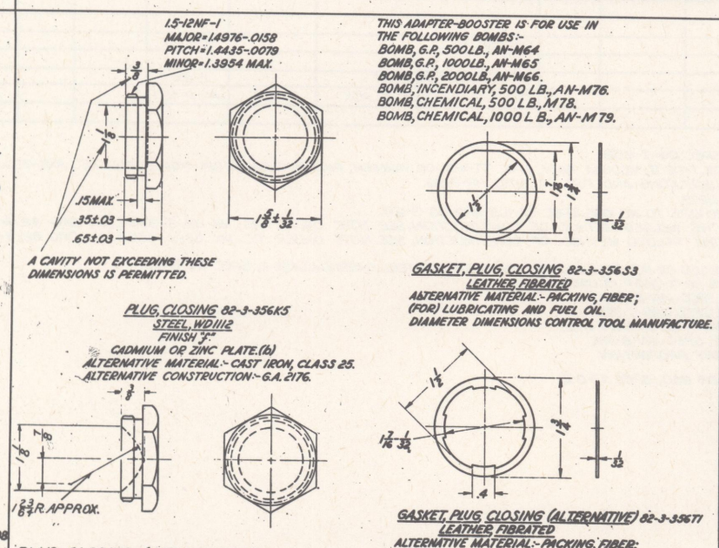
ORDNANCE DEPT. U.S.A.

SUPERSEDES 8Z-3-335 WITHOUT CHANGE FEB 21, 1949









LINE NO.	LIST OF DRAWINGS	DRAWING NUMBER
1	ASSEMBLY	82-3-356
2	LIST OF PARTS AND LIST OF SPECS.	82-3-356A
3	ADAPTER AND FUZE ADAPTER (ALT.)	G.A. 2205
4	ADAPTER (ALTERNATIVE)	G.A. 2270
5	PLUG, CLOSING (ALTERNATIVE)	G.A. 2176
6	PACKING BOX	76-16-381
7	PACKING AND MARKING OF BOX	20-4-333
8		

SUPERSEDES OLD TRACING 82-3-356 UNDER REVISION DATE OF DEC. 3, 1943

ADAPTER-BOOSTER, M11SAI ASSEMBLY AND DETAILS.

MAY 26, 1942

REVISIONS	
4	8-17-43
5	12-3-43
6	6-24-44
7	8-17-44
8	8-15-45
9	11-1-49

DRG. PERTAINS TO

CLASS	DIVISION	DRAWING	FILE
82	3	356	

TOLERANCE ON DIMENSIONS NOT OTHERWISE SPECIFIED
DECIMAL ±
FRACTIONAL ±
ANGULAR ±

D'TSMAN MP | TRACER MP | ENGINEER | CHECKER NWF | U.S. ENGINEER

SUBMITTED:- A. M. Gallagher, CHIEF, MAJOR, ORD. DEPT. U.S.A.

EXAMINED:- H. L. Beckman, ORD. DEPT. U.S.A.

APPROVED BY ORDER OF THE CHIEF OF ORDNANCE:- [signature], COLONEL, ORD. DEPT. U.S.A.

D

ORDNANCE DEPT. U.S.A.

LIST OF PARTS

LINE NO.	NAME OF PART	NUMBER REQ'D PER COMPONENT	PIECE MARK	MATERIAL: SIZE OR FORM	MATERIAL: KIND	MATERIAL: GRADE	MATERIAL: SPEC NUMBER	APPROXIMATE UNIT WEIGHT (GRAINS)	APPROX GROSS WT. OF RAW STOCK PER 1000 ASSEMBLIES	REMARKS
1	ASSEMBLY		82-3-356A				50-16-3	3.69 LBS		
2										
3	CLOSING CUP ASSEMBLY		82-3-356B					4.53		
4	METAL PARTS SUBASSEMBLY		82-3-356N							
5										
6	ADAPTER	1	82-3-356E		STEEL	FS 1020	QQ-S-671	1008.		(p) (f)(g)(e)(L)
7	ADAPTER, FUZE	1	82-3-356H		STEEL	FS 1010 TO 1020	QQ-S-671	839.45		(p) (f)(h)(e)(L)
8										
9										
10	CASING, BOOSTER	1	82-3-356F	STRIP	STEEL	WD 1010 OR 1015	57-136	2277.		(p)
11										
12	CHARGE, CLOSING CUP	1	82-3-356C		TETRYL		JAN-T-339	1.53		
13	CUP, CLOSING	1	82-3-356D	STRIP	GILDING METAL		JAN-G-439	3.		
14										
15										
16	DISC	1	82-3-356L	ROLL	FELT	NO. 10	8-15	12.11		
17										
18	GASKET, PLUG, CLOSING	1	82-3-356S	SHEET	GASKET-MATERIAL, LEATHER		JAN-G-402			(d)
19	GASKET, PLUG, CLOSING (ALTERNATIVE)		82-3-356T	SHEET	GASKET-MATERIAL, LEATHER		JAN-G-402			(d)
20	PELLET	1	82-3-356G		TETRYL		JAN-T-339	1853.32		
21	PLUG, CLOSING	1	82-3-356K	BAR	STEEL	FS 1112	QQ-S-671	2300.		(p) (m)(a)(k)
22	SCREW, SET	1	82-3-356M	1/2 X 28 X 1/4 LG	STEEL		COMMERCIAL			(p)
23	PLUG, CLOSING, (ALTERNATIVE)		82-3-356P	CASTING	GRAY IRON	CLASS 20	QQ-I-652			
24										
25					CEMENT, PETTMAN		JAN-C-99			
26										
27										
28					GRAPHITE	II	JAN-G-155			(n)
29										
30										
31					GREASE, SHELL		50-11-37			
32										
33					OIL, LUBRICATING, LIGHT		2-120			
34					PAINT, ACID-PROOF BLACK	TYPE I	JAN-P-450			(c)
35										

(a) ALTERNATIVE MATERIAL:- CAST IRON, CLASS 25, SPEC QQ-I-652.
(c) ALTERNATIVE MATERIAL:- VARNISH, SHELLAC, ORANGE, TYPE II, MEDUIM BODY, SPEC TT-V-91 OR VARNISH, PHENOLIC, BAKED (UN-PIGMENTED), SPEC AXS-736.
(d) ALTERNATIVE MATERIAL:- PACKING FIBER, (FOR) LUBRICATING AND FUEL OIL, SPEC HH-P-96.
(e) ALTERNATIVE CONSTRUCTION:- GA 2205 OR GA 2278.
(f) ALTERNATIVE CONSTRUCTION:- STEEL, FORGING, WD 1025 TO WD 1035, SPEC 57-105 AND QQ-S-671.
(g) STEEL, FS 1020, SPEC QQ-S-671, FOR ALTERNATIVE WELDED METHOD OF CONSTRUCTION, SEE NOTE UNDER PC MK 82-3-356E, ON DWG 82-3-356.
(h) STEEL, FS 1020, SPEC QQ-S-671, FOR ALTERNATIVE WELDED METHOD OF CONSTRUCTION, SEE NOTE UNDER PC MK 82-3-356H, ON DWG 82-3-356.
(k) ALTERNATIVE CONSTRUCTION:- GA 2176.
(L) ALTERNATIVE MATERIALS:- STEEL, FS 1112, COLD ROLLED OR HOT ROLLED, SPEC QQ-S-671, OR STEEL, CASTING, CLASS 2, SPEC QQ-S-681.
(m) NOT REQUIRED WHEN PLUG, CLOSING, ALTERNATIVE 82-3-356P IS USED.
(n) ALTERNATIVE MATERIAL: BARIUM STEARATE, SPEC JAN-B-366.
ALTERNATIVE MATERIAL: CALCIUM STEARATE, SPEC JAN-C-263.
ALTERNATIVE MATERIAL: A MIXTURE OF GRAPHITE, GRADE I OR II, SPEC JAN-G-155 AND/OR BARIUM STEARATE, SPEC JAN-B-366, OR CALCIUM STEARATE, SPEC JAN-C-263, IN ANY PROPORTION.
(p) PROTECTIVE FINISH:- TYPE I, CLASS TS, AS OR RSC, SPEC 57-0-2.

SUPERSEDES &c 3-356A WITHOUT CHANGE FEB 21, 1949

LIST OF SPECIFICATIONS

LINE NO.	LIST OF SPECIFICATIONS	SPEC NUMBER *	REQUIRED BY
1	AMMUNITION, EXCEPT SMALL ARMS AMM, GENERAL SPEC FOR	50-0-1	DWG 82-3-356
2	ADAPTER-BOOSTERS FOR BOMBS, METAL PARTS FOR	50-82-2	DWG 82-3-356
3	ADAPTER-BOOSTERS FOR BOMBS, LOADING, ASSEMBLING & PACKING	50-16-3	DWG 82-3-356
4	BARIUM STEARATE	JAN-B-366	DWG 82-3-356
5	CEMENT, PETTMAN	JAN-C-99	DWG 82-3-356
6	CALCIUM STEARATE	JAN-C-263	DWG 82-3-356
7	FELT, PRESSED	8-15	DWG 82-3-356
8	FINISHES, PROTECTIVE, FOR IRON AND STEEL PARTS	57-0-2	DWG 82-3-356
9	FORGINGS, LIGHT, DROP & MISC, STEEL, CARBON & ALLOY	57-105	DWG 82-3-356
10			
11	GASKET-MATERIAL, LEATHER (FIBRATED) SHEET (FOR ORDNANCE USE)	JAN-G-402	DWG 82-3-356
12	GRAPHITE	JAN-G-155	DWG 82-3-356
13	GREASE, SHELL	50-11-37	DWG 82-3-356
14			
15	IRON, GRAY, CASTINGS	QQ-I-652	DWG 82-3-356
16			
17	METALS; GENERAL SPECIFICATION FOR INSPECTION OF	QQ-M-151	57-136
18	METAL, GILDING (95/5 BRASS), SHEETS AND STRIPS	JAN-G-439	DWG 82-3-356
19			
20	OIL, LUBRICATING, PRESERVATIVE, LIGHT	2-120	DWG 82-3-356
21			
22	PAINT, ACID-PROOF BLACK, FOR AMMUNITION	JAN-P-450	DWG 82-3-356
23	PAINTS AND RELATED MATERIALS, GENERAL SPEC FOR	3-1	JAN-P-450
24	PACKING, FIBER; (FOR) LUBRICATING AND FUEL OIL	HH-P-96	DWG 82-3-356
25			
26	STEEL, CARBON AND ALLOY, BARS	QQ-S-671	DWG 82-3-356
27	STEEL, CARBON AND ALLOY, SHEETS AND STRIPS	57-136	DWG 82-3-356
28	STEEL; CASTINGS	QQ-S-681	DWG 82-3-356
29			
30	TETRYL	JAN-T-339	DWG 82-3-356
31			
32	TEXTILES; TEST METHODS	CCC-T-191	8-15
33			
34	VARNISH, PHENOLIC, BAKED (UN-PIGMENTED)	AXS-736	DWG 82-3-356
35	VARNISH, SHELLAC	TT-V-91	DWG 82-3-356
36			

* THE SPECIFICATION NUMBERS SHOWN ARE BASIC NUMBERS ONLY. WHEN A SPECIFICATION IS REVISED A LETTER IS AFFIXED TO ITS BASIC NUMBER. SPECIFICATIONS REFERRED TO IN THESE SPECIFICATIONS AND NOT LISTED HEREON, SHALL NOT APPLY.

NOTICE:- THIS DRAWING SHALL NOT BE USED NOR REPRODUCED EITHER WHOLLY OR IN PART EXCEPT WHEN AUTHORIZED IN CONNECTION WITH UNITED STATES GOVERNMENT PROCUREMENT.

ADAPTER-BOOSTER, M115A1
LIST OF PARTS AND LIST OF SPECIFICATIONS.

MAY 26, 1942.

REVISIONS

5	8-17-44				
6	2-21-49				

DRG. PERTAINS TO
82-3-356

CLASS	DIVISION	DRAWING	FILE
82	3	356A	

TOLERANCE ON DIMENSIONS NOT OTHERWISE SPECIFIED
DECIMAL ±
FRACTIONAL ±
ANGULAR ±

D'TSMAN	TRACER	ENGINEER
OCP	REC	
CHECKER		ENGINEER
ACJ	9-23-49	

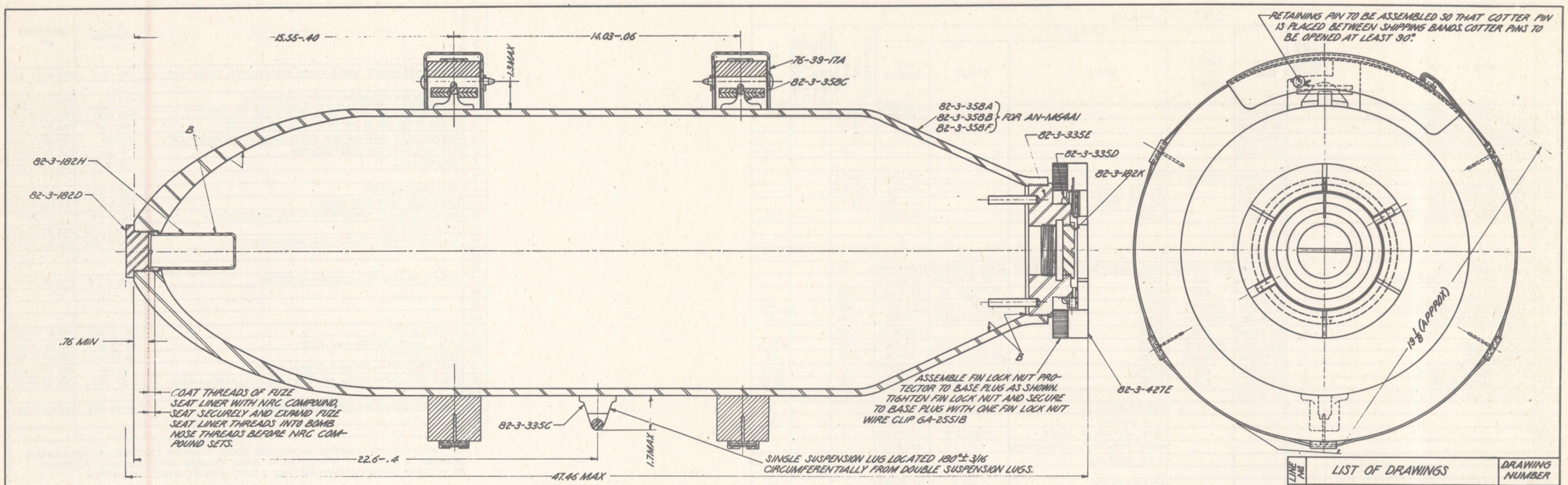
SUBMITTED:-
ORD. ENG., ORD. DEPT. U.S.A.

EXAMINED:-
COL., ORD. DEPT. U.S.A.

APPROVED BY ORDER OF THE CHIEF OF ORDNANCE:-
COL., ORD. DEPT. U.S.A.

D

ORDNANCE DEPT., U.S.A.



METAL PARTS ASSEMBLY 82-3-357A9
WEIGHT=275.6 LBS.

NOTES:-

A- STAMP ON REAR CONICAL SURFACE OF BODY WITH 1/4 INCH HIGH LETTERS AND FIGURES, "GP 500 LB AN-M64A1 MANUFACTURER'S LOT NUMBER AND DATE (MONTH AND YEAR) OF MANUFACTURE." SAMPLE STAMPING:- "GP 500 LB AN-M64A1 PA-1-23 5-42."
STAMPING NOT TO EXTEND BEYOND 12 IN. FROM CENTER OF REAR SUSPENSION LUG. (a)

B- COAT ENTIRE INTERIOR SURFACE, EXCEPT THREADS, INCLUDING EXTERIOR SURFACE OF FUZE SEAT LINER AND INSIDE SURFACE (EXCEPT THREADS) OF BASE PLUG ASSEMBLY, WITH ACID-PROOF BLACK PAINT, TYPE I.

C- BEFORE ASSEMBLING SHIPPING BANDS AND FINLOCK NUT PROTECTOR, COAT ENTIRE EXTERIOR SURFACE, INCLUDING FINLOCK NUT, EXCEPTING THREADS (CLOSING PLUGS OPTIONAL) WITH PRIMER, SYNTHETIC, LACQUER-RESISTING.

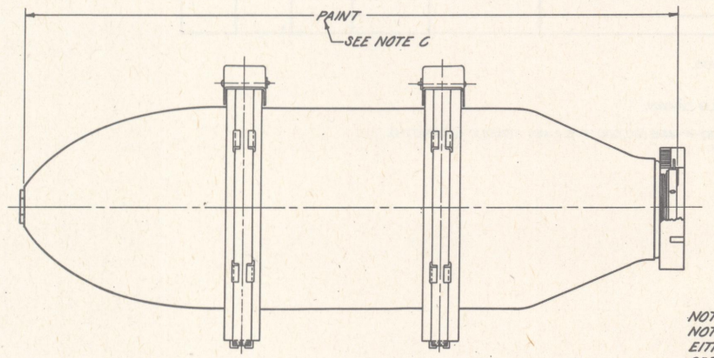
D- COAT THREADS OF FIN LOCK NUT WITH SHELL GREASE BEFORE ASSEMBLING.

E- SHIPPING BANDS MUST NOT BE SPREAD MORE THAN TWO INCHES AT OPEN ENDS AND SHALL BE ADJUSTED, IF NECESSARY, TO SECURE TIGHT FIT IN ASSEMBLING OPERATION.

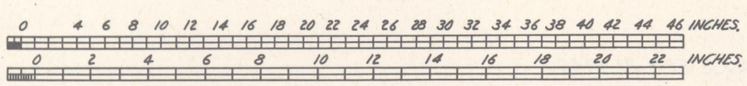
F- COAT THREADS OF NOSE CAVITY WITH SHELL GREASE PRIOR TO ASSEMBLING NOSE CLOSING PLUG.

(a)- ALTERNATIVE:- EMBOSS REQUIRED DATA IN LETTERS AND FIGURES 1/4 INCH HIGH ON A NO. 34 U.S. GAGE GALVANIZED STEEL PLATE, 5 1/8 INCHES BY 1 5/8 INCHES. ASSEMBLE PLATE TO BODY ON REAR CONICAL SURFACE WITH 8 SPOT WELDS (1 AT EACH CORNER AND 2 ON EACH 5 1/8 INCH SIDE). PLATE NOT TO EXTEND BEYOND 12 IN. FROM CENTER OF REAR SUSPENSION LUG.

SECURE SUSPENSION LUGS TO BODY WITH ONE OR TWO PASSES OF METALLIC ARC WELDING. WHEN USING TWO PASSES FORM ONE BEAD OVER THE OTHER. DO NOT WELD INSIDE EDGES. SUSPENSION LUGS MUST BE WELDED TO BODY PRIOR TO HEAT TREATMENT, NORMALIZING, OR STRESS RELIEVING OF THE ENTIRE BODY AS REQUIRED BY SPEC. TEST EACH LUG WITH A STEADY NORMAL PULL OF 6000 LBS. TEST EACH LUG WITH A STEADY PULL OF 1800 LBS PARALLEL TO LONGITUDINAL AXIS OF BOMB (FORE AND AFT)



METAL PARTS SHIPPING ASSEMBLY



LINE No.	LIST OF DRAWINGS	DRAWING NUMBER
1	METAL PARTS ASSEMBLY	82-3-357
2	LIST OF PARTS AND LIST OF SPECS	82-3-357A
3	DETAILS	82-3-358
4	DETAILS	82-3-182
5	BANDS, SHIPPING	76-39-17
6	DETAILS	82-3-335
7	LUG, SINGLE SUSPENSION (ALT)	G.A. 2109 OR 2132
8	NUT, FIN LOCK (ALTERNATIVE)	G.A. 2135
9	PROTECTOR, NUT, FIN LOCK	82-3-427
10	TAIL CLOSING PLUG (ALTERNATIVE)	G.A. 2175
11	LUG, SUSPENSION (ALTERNATIVE)	G.A. 2232 OR 2260
12	LIST OF PARTS AND LIST OF SPECS	76-39-17A
13	NOSE CLOSING PLUG (ALTERNATIVE)	G.A. 2422
14	CLIP, WIRE, FIN LOCK NUT	G.A. 2551

BOMB, GP 500 LB, AN-M64A1. METAL PARTS ASSEMBLY AND METAL PARTS SHIPPING ASSEMBLY.

MAY 26, 1942	CLASS	DIVISION	DRAWING	FILE
REVISIONS	82	3	357	

8	9-15-45	
9	2-21-49	

TOLERANCE ON DIMENSIONS NOT OTHERWISE SPECIFIED
DECIMAL ±
FRACTIONAL ±
ANGULAR ±

DFTSMAN	TRACER	ENGINEER
J.P.D.	J.M.G.	
CHECKER		ENGINEER
A.C.J.	C.G.S. 6-8	

SUBMITTED:- ORD. ENG. ORD. DEPT., U.S.A.

EXAMINED:- C.R. Dutton COL., ORD. DEPT., U.S.A.

APPROVED BY ORDER OF THE CHIEF OF ORDNANCE:- J.H. Burns COL. ORD. DEPT., U.S.A.

DRG. PERTAINS TO

D

ORDNANCE DEPT., U.S.A.

NOTICE:- THIS DRAWING SHALL NOT BE USED NOR REPRODUCED EITHER WHOLLY OR IN PART EXCEPT WHEN AUTHORIZED IN CONNECTION WITH UNITED STATES GOVERNMENT PROCUREMENT.

SUPERSEDES 82-3-357 WITHOUT CHANGE FEB 21, 1949

LIST OF PARTS

LINE NO.	NAME OF PART	NUMBER REQ'D PER COMPONENT	PIECE MARK	MATERIAL: SIZE OR FORM	MATERIAL: KIND	MATERIAL: GRADE	MATERIAL: SPEC NUMBER	APPROXIMATE UNIT WEIGHT (POUNDS)	APPROX GROSS WT. OF RAW STOCK PER 1000 ASSEMBLIES	REMARKS
1	METAL PARTS ASSEMBLY		82-3-357A				50-71-1, WXS-36 AXS-489	275.6		(a)
2	BASE PLUG ASSEMBLY		82-3-335E					12.70		
3	SHIPPING BAND ASSEMBLY	2	76-39-17A					11.		
4	FIN LOCK NUT ASSEMBLY		82-3-335D					1.51		(p)
5										
6	BODY	1	82-3-358A	FORGING	STEEL		50-71-1	234.0		
7	BODY (ALTERNATIVE)		82-3-358B		WELDED STEEL		WXS-36	234.0		
8	BODY (ALTERNATIVE)		82-3-358F		WELDED STEEL		AXS-489	234.0		
9	CLIP, WIRE, FIN LOCK NUT	1	GA-2551B		STEEL		COMMERCIAL			(g)
10										
11										
12										
13	LINER, FUZE SEAT	1	82-3-182H	STRIP & TUBING	STEEL & STEEL TUBING, TYPE I, II, III OR IV	WD 1010 TO WD 1035	57-136 & 57-180	.37		
14	NUT, FIN LOCK (ALTERNATIVE)		82-3-358G	BAR	STEEL	FS 1015 TO FS 1035	QQ-S-671			
15	LUG, FIN LOCK NUT	2	82-3-335B	BAR	STEEL	FS 1010, 1015 OR 1020	QQ-S-671	.04		
16	LUG, SINGLE SUSPENSION	1	82-3-335C	FORGING	STEEL	WD 1025 TO 1035	57-105	.60		(m)
17	LUG, SUSPENSION	2	82-3-358C	FORGING	STEEL	WD 1025 TO 1035	57-105	.40		(k)
18	STUD	2	82-3-335F	ROD	STEEL		COMMERCIAL	.08		
19	NUT, FIN LOCK	1	82-3-358D	FORGING	STEEL	WD 1015 TO 1035	57-105	1.43		(l) (b) (s)
20	PLUG, BASE	1	82-3-358E	FORGING	STEEL	WD 1020 TO 1035	57-105	12.54		(c)
21	PLUG, CLOSING, NOSE	1	82-3-182D	BAR	STEEL		QQ-S-671	1.10		(e) (f)
22	PLUG, CLOSING, TAIL	1	82-3-182K	BAR	STEEL	FS 1112	QQ-S-671	1.02		(e) (r)
23	PROTECTOR, NUT, FIN LOCK	1	82-3-427E					1.6		
24					GREASE, SHELL		50-11-37			
25					FLUX, BRAZING		4-1121			(h)
26					PAINT, ACID-PROOF BLACK	TYPE I & II	JAN-P-450			
27					PRIMER, SYNTHETIC, LACQUER-RESISTING		JAN-P-72			
28					N R C COMPOUND	A	JAN-C-388			
29										
30					SOLDER SILVER	CLASS 4	QQ-S-561			(h)
31										
32					WIRE, WELDING		COMMERCIAL			
39										
34										

(a) WEIGHT WITHOUT SHIPPING BANDS AND FIN LOCK NUT PROTECTOR = 252. LBS.
(b) ALTERNATIVE MATERIAL :- STEEL TUBING, WD 1015 TO 1035, TYPES I, II, III, IV, SPEC 57-180.
(c) ALTERNATIVE MATERIAL :- STEEL CASTING, CLASS 2, 3, OR 4, SPEC QQ-S-681.
(d) ALTERNATIVE MATERIAL :- CAST IRON, CLASS 25, SPEC QQ-I-652.
(e) STEELS TO BE USED :- FS 1112, FS 1015 TO FS 1035, AND FSX 1314, HOT ROLLED OR COLD DRAWN.
(f) ALTERNATIVE CONSTRUCTION :- G A-2422.
(g) ALTERNATIVE MATERIAL :- WIRE, STEEL (CARBON) SPRING, HARD DRAWN, SPECIFICATION QQ-W-465 (60,000 P S I MIN TENSILE STRENGTH).
(h) SOLDER, SILVER AND FLUX, BRAZING, USED ONLY ON FUZE SEAT LINER, 82-3-182H.
(k) ALTERNATIVE CONSTRUCTION :- GA 2232 OR GA 2260.
(l) NOT REQUIRED WHEN NUT, FIN LOCK (ALTERNATIVE) 82-3-358G IS USED.
(m) ALTERNATIVE CONSTRUCTIONS :- GA SKETCHES 2109 AND 2032.
(p) ALTERNATIVE CONSTRUCTION :- GA SKETCH 2135.
(r) ALTERNATIVE CONSTRUCTION :- GA 2175.
(s) ALTERNATIVE CONSTRUCTION :- WD 1015 TO WD 1035 BAR STOCK, SPEC QQ-S-671.

SUPERSEDES 82-3-357A WITHOUT CHANGE FEB 21, 1949

LIST OF SPECIFICATIONS

LINE NO.	LIST OF SPECIFICATIONS	SPEC NUMBER *	REQUIRED BY
1	AMMUNITION, EXCEPT SMALL ARMS AMM, GENERAL SPEC FOR	50-0-1	DWG 82-3-357
2			
3	BOMBS, SEAMLESS, METAL PARTS ASSEMBLY	50-71-1	DWG 82-3-357
4	BOMBS, STEEL, G P & SAP BUTT RESISTANCE WELDED, ETC	AXS-489	DWG 82-3-358
5	BOMBS, STEEL, GP & SAP METAL ARC WELDED, ETC	WXS-36	DWG 82-3-358
6	FORGINGS, LIGHT DROP AND MISC, STEEL, CARBON AND ALLOY ETC	57-105	DWG 82-3-358
7	FLUX, BRAZING (FOR SILVER SOLDER)	4-1121	DWG 82-3-357
8	GREASE, SHELL	50-11-37	DWG 82-3-357
9			
10	IRON, GRAY, CASTINGS	QQ-I-652	DWG 82-3-182
11	LINER, FUZE SEAT (FOR BOMBS)	50-84-4	DWG 82-3-182
12	METALS; GENERAL SPECIFICATION FOR INSPECTION OF	QQ-M-151	57-180
13	N R C COMPOUND	JAN-C-388	DWG 82-3-357
14	PAINT, ACID-PROOF BLACK, FOR AMMUNITION	JAN-P-450	DWG 82-3-357
15			
16			
17	PRIMER, SYNTHETIC, LACQUER-RESISTING	JAN-P-72	DWG 82-3-317
18			
19			
20			
21	SOLDER SILVER	QQ-S-561	DWG 82-3-182
22	STEEL BARS, CARBON AND ALLOY	QQ-S-671	DWG 82-3-182
23	STEEL, CASTINGS	QQ-S-681	DWG 82-3-358
24	STEEL SHEETS AND STRIPS, CARBON AND ALLOY	57-136	DWG 82-3-182
25	TUBES, STEEL, STRUCTURAL, WELDED & SEAMLESS, CARBON & ALLOY	57-180	DWG 82-3-182
26			
27	WIRE, STEEL (CARBON); SPRING, HARD DRAWN	QQ-W-465	DWG 82-3-357
28			
29			

* THE SPECIFICATION NUMBERS SHOWN ARE BASIC NUMBERS ONLY. WHEN A SPECIFICATION IS REVISED A LETTER IS AFFIXED TO ITS BASIC NUMBER. SPECIFICATIONS REFERRED TO IN THESE SPECIFICATIONS AND NOT LISTED HEREON, SHALL NOT APPLY.

NOTICE :- THIS DRAWING SHALL NOT BE USED NOR REPRODUCED EITHER WHOLLY OR IN PART EXCEPT WHEN AUTHORIZED IN CONNECTION WITH UNITED STATES GOVERNMENT PROCUREMENT.

BOMB, G.P., 500 LB., AN-MG4A1.
METAL PARTS ASSEMBLY
LIST OF PARTS AND LIST OF SPECS.

MAY 26, 1942

REVISIONS	
9	10-1-45
10	2-21-49

DRG. PERTAINS TO 82-3-357

CLASS	DIVISION	DRAWING	FILE
82	3	357A	

TOLERANCE ON DIMENSIONS NOT OTHERWISE SPECIFIED
DECIMAL ±
FRACTIONAL ±
ANGULAR ±

D'FTSMAN	TRACER	ENGINEER
EJS	REC	
CHECKER		ENGINEER
ACJ		

SUBMITTED:-
ORD. ENG., ORD. DEPT. U. S. A.

EXAMINED:-
COL., ORD. DEPT. U. S. A.

APPROVED BY ORDER OF THE CHIEF OF ORDNANCE:-
COL., ORD. DEPT. U. S. A.

D

ORDNANCE DEPT., U. S. A.

NOTE: OUT OF ROUND TOLERANCE .125 ON DIAMETER.

CYLINDRICAL, SAME AS OUTSIDE DIAMETER OF BODY.

1.130+.025

2-12N5-1 NON STD.(h)
MAJOR DIA 2.0000 MIN
PITCH DIA 1.9439+.0106
MINOR DIA 1.9098+.0150(h)

.3 MIN. WHEN MANUFACTURED FROM A FORGING OR SEAMLESS STEEL TUBING.

G.375-12N5-1
MAJOR DIA G.3750 MIN
PITCH DIA G.3209+.0134
MINOR DIA G.2848+.0090

50° CHAMFER REQUIRED, DEPTH OF THREAD X 30° MAX.

2.R MIN.

.93 MIN PERFECT TH'DS. MAY BE TAPPED THROUGH.

3.R

.15 MAX.

.065 R

.110 MIN.

9 3/16 R

17 7/8 R

.176 R

.56 MIN.

.49 MIN.

1.25 MIN

(DETERMINE CIRCUMFERENTIALLY)

WHEN BODY IS MADE FROM SEAMLESS TUBING THE RECOMMENDED TUBE THICKNESS IS .422 MAX AND .328 MIN THICKNESS MUST NOT EXCEED THIS MAXIMUM. MINIMUM TUBE THICKNESS IS ADVISORY ONLY. NO PART ON FINISHED BODY SHALL BE UNDER MINIMUM WALL THICKNESS SPECIFIED ON BODY DRAWING. INSIDE DIAMETER GIVEN ON DRAWING IS NOT APPLICABLE WHEN BODY IS MADE FROM SEAMLESS TUBING.

44.85 -.50

24°

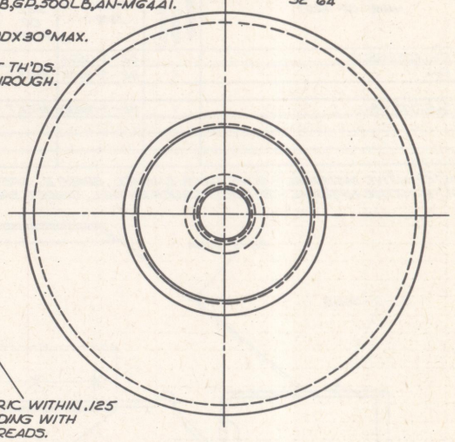
.318 MIN(b)

* TO BE CONCENTRIC WITHIN .125 INDICATOR READING WITH G.375-12 N5-1 THREADS.

THE THICKNESS OF THE METAL IN THE OGIVAL SECTION OF THE NOSE WHERE ONLY MIN DIMENSIONS ARE SPECIFIED, MAY EXCEED THE DIMENSIONS BY 40% AT THE 3 INCH AND 6 INCH CONTROL POINTS AND 30% AT THE 9 INCH CONTROL POINT, WHEN TAKEN AS AN AVERAGE OF 3 OR MORE READINGS, EQUALLY SPACED CIRCUMFERENTIALLY. AT NO POINT WILL THE THICKNESS BE LESS THAN THE MIN DIMENSIONS SPECIFIED.

BODY (ALTERNATIVE) FOR 500 LB. AN-MG4A1 BOMB 82-3-358FG

BUTT RESISTANCE WELDED CONSTRUCTION OF SAME DIMENSIONS AS BODY 82-3-358A. FOR DETAILS OF CONSTRUCTION SEE SPEC AXS-489. PLATE TO BE USED IN CYLINDRICAL SECTION OF BODY TO BE 11/32 +1/64 THICK FOR USE ONLY ON BOMB, G.P., 500 LB, AN-MG4A1.



BODY (ALTERNATIVE) 82-3-358BG

METAL ARC WELDED CONSTRUCTION OF SAME DIMENSIONS AS BODY, 82-3-358A FOR DETAILS OF CONSTRUCTION SEE SPEC WXS-36. PLATE USED IN CYLINDRICAL SECTION OF BODY TO BE 11/32 +1/64 THICK. THIS METHOD OF MANUFACTURE TO BE USED ONLY IF SPECIFIED IN CONTRACT. FOR USE ONLY ON BOMB, G.P., 500 LB., AN-MG4A1.

BODY 82-3-358AB

STEEL FORGING, AS SPECIFIED
FOR USE ONLY ON BOMB G P 500 LB AN-MG4A1.

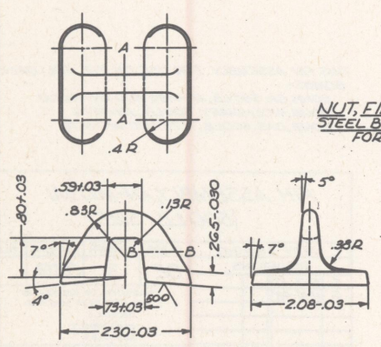
(b) MAY BE .3 MIN FOR 45° MAX OF CIRCUMFERENCE.

FLASH WELD.

FORM BAR STOCK INTO RING AND WELD ENDS AS SHOWN.

NUT, FIN LOCK (ALTERNATIVE) 82-3-358G8

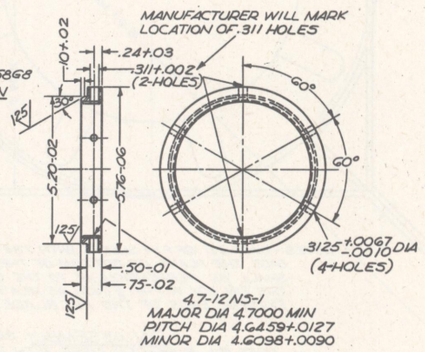
STEEL BAR, FS 1015 TO FS 1035, COLD-DRAWN
FOR DIMENSIONS SEE 82-3-358D



LUG, SUSPENSION 82-3-358C8

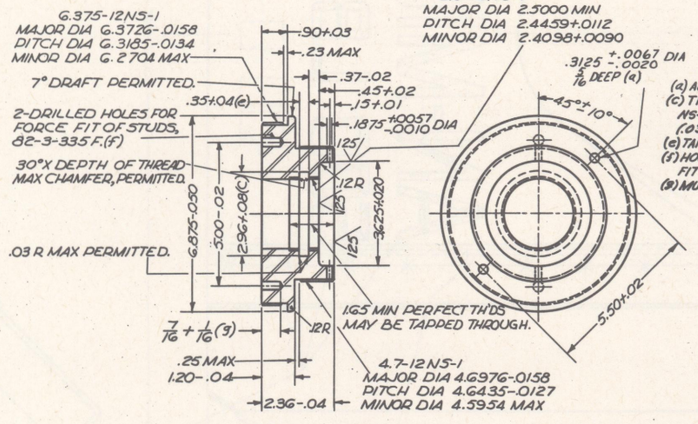
STEEL FORGING, WD 1025 TO 1035

ALTERNATIVE CONSTRUCTION:-GA 2232 OR 2260
FOR USE ONLY ON BOMB, 500 LB., AN-MG4A1



NUT, FIN LOCK 82-3-358D8

STEEL FORGING, WD 1015 TO WD 1035



PLUG, BASE 82-3-358E8

STEEL FORGING, WD 1020 TO 1035

MIN PHYSICAL PROPERTIES

T.S.	70,000	E.L.	15%
Y.P.	40,000	RED.	25%

FOR USE ONLY ON BOMB, G.P. 500 LB., AN-MG4A1.

SEE DWG 82-3-357A FOR PROTECTIVE FINISHES AND ALTERNATIVE MATERIAL.

REMOVE ALL BURRS.

SCALE, INCHES, 1/1, 1/2

SUPERSEDES 82-3-358 WITHOUT CHANGE JUNE 10, 1949

NOTICE: THIS DRAWING SHALL NOT BE USED NOR REPRODUCED EITHER WHOLLY OR IN PART EXCEPT WHEN AUTHORIZED IN CONNECTION WITH UNITED STATES GOVERNMENT PROCUREMENT.

(a) ALIGNMENT OF 2/16 HOLES WITH 3/16 HOLES, OPTIONAL.
(c) THE 2.96+.08 DIA. GROOVE SHALL BE CONCENTRIC WITH 2.5-12 N5-1 INTERNAL THREADS WITHIN .06 DIAL INDICATOR READING. (.03 ECCENTRICITY).
(e) TAPER PERMITTED WITHIN TOLERANCE.
(f) HOLES MAY BE TAPERED 1/2 INCH PER FOOT OF DIAMETER FOR FORCE FIT OF TAPERED STUDS, 82-3-335F.
(g) MUST BE 5/16 + 1/16 WHEN TAPERED STUD, 82-3-335F IS USED.

BOMB, G.P., 500 LB., AN-MG4A1, BOMB, CHEM., 500 LB, AN-M78 & INCEND, 500 LB., AN-M76. METAL PARTS DETAILS.

MAY 26, 1942	CLASS	DIVISION	DRAWING	FILE
REVISIONS	82	3	358	
7 8-13-45				
8 6-10-49				

TOLERANCE ON DIMENSIONS NOT OTHERWISE SPECIFIED
DECIMAL ±
FRACTIONAL ±
ANGULAR ±

DRAFTSMAN	TRACER	ENGINEER
J.P.D.	E.J.S.	

CHECKER	ENGINEER
A.C.J.	

DRG. PERTAINS TO
82-3-357

SUBMITTED:
ORD. ENG., ORD. DEPT., U.S.A.

EXAMINED:
COL., ORD. DEPT., U.S.A.

APPROVED BY ORDER OF THE CHIEF OF ORDNANCE:
COL., ORD. DEPT., U.S.A.

D

ORDNANCE DEPT., U.S.A.

LIST OF PARTS

LINE NO.	NAME OF PART	NUMBER REQ'D PER COMPONENT	PIECE MARK	MATERIAL: SIZE OR FORM	MATERIAL: KIND	MATERIAL: GRADE	MATERIAL: SPEC NUMBER	APPROXIMATE UNIT WEIGHT (POUNDS)	APPROX GROSS WT OF RAW STOCK PER 1000 ASSEMBLIES	REMARKS
1	FIN ASSEMBLY		82-3-359A				50-B4-3	18.6		
2	FIN	4	82-3-360A	SHEET	STEEL, COLD-ROLLED	WD 1010	57-136	3.8		
3										
4	SLEEVE, FIN	1	82-3-360B	SHEET	STEEL, COLD-ROLLED	WD 1010	57-136	3.4		
5					PRIMER, SYNTHETIC, LACQUER-RESISTING		JAN-P-72			
6					LACQUER ENAMEL, OLIVE DRAB	II	JAN-L-73			(a)
7					INK, STENCIL, BLACK		TT-I-558			(b)

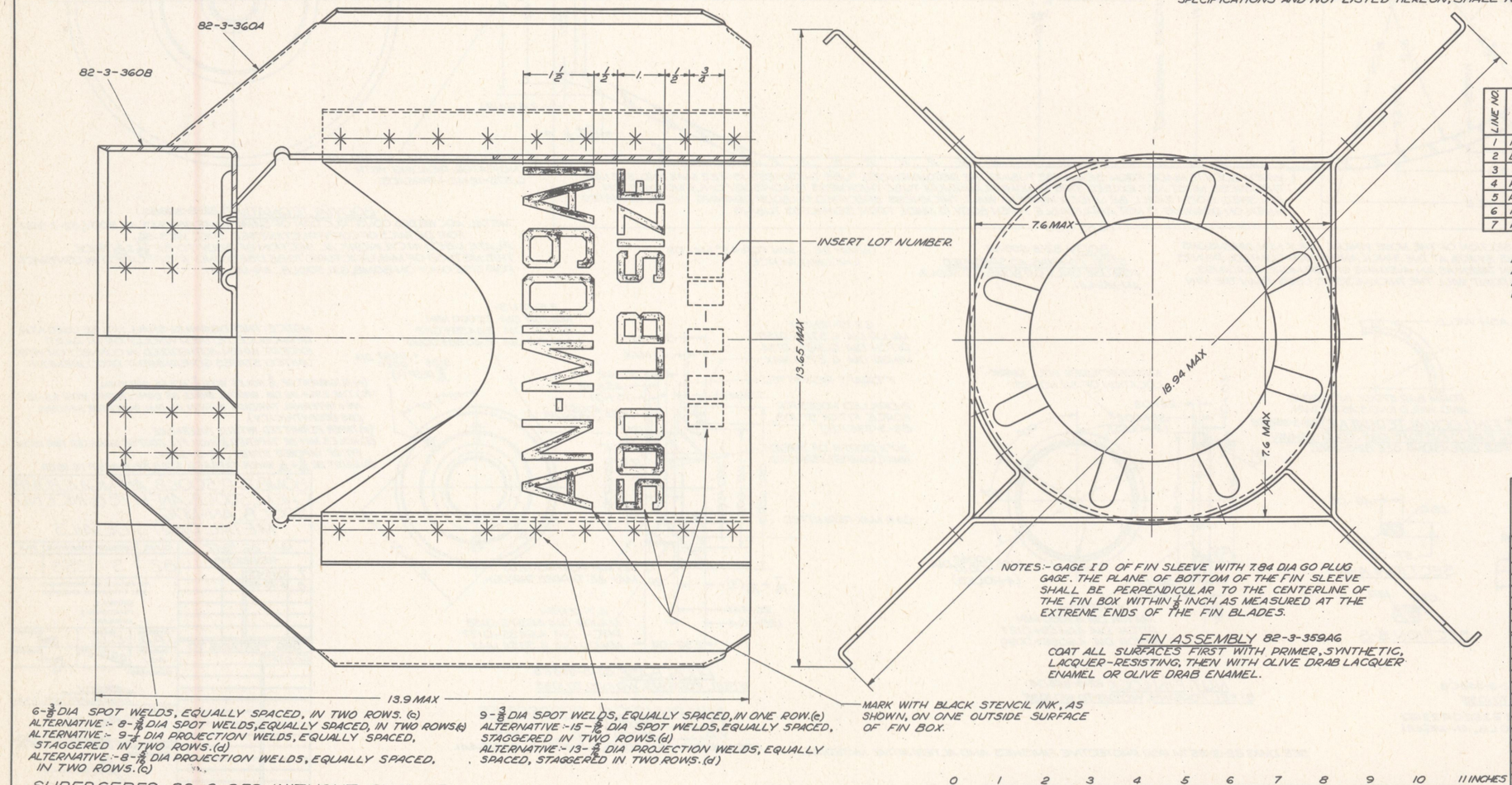
(a) ALTERNATIVE MATERIAL :- OLIVE DRAB ENAMEL, GRADE II, SPEC JAN-E-74.
(b) ALTERNATIVE MATERIAL :- BLACK LACQUER ENAMEL, GRADE I, SPEC JAN-L-73.

(c) CENTER OF ONE ROW TO BE $\frac{\text{DIA}}{2} + \frac{1}{16}$ FROM BEND LINE. FIRST WELD ON EACH END OF BOTH ROWS TO BE $\frac{\text{DIA}}{2} + \frac{1}{8}$ FROM END EDGE.
(d) CENTER OF ONE ROW TO BE $\frac{\text{DIA}}{2} + \frac{1}{32}$ FROM BEND LINE. FIRST WELD ON EACH END OF LONGER ROW TO BE $\frac{\text{DIA}}{2} + \frac{1}{8}$ FROM END EDGE.
(e) CENTER OF ROW TO BE $\frac{\text{DIA}}{2} + \frac{1}{32}$ FROM BEND LINE. FIRST WELD ON EACH END OF ROW TO BE $\frac{\text{DIA}}{2} + \frac{1}{8}$ FROM END EDGE.

LIST OF SPECIFICATIONS

LINE NO.	LIST OF SPECIFICATIONS	SPEC NUMBER *	REQUIRED BY
1	AMMUNITION, EXCEPT SMALL ARMS AMMUNITION, GENERAL SPEC FOR	50-0-1	DWG 82-3-359
2	INK, STENCIL, OPAQUE, FOR MARKING NON-POROUS SURFACES (METAL, GLASS, ETC)	TT-I-558	DWG 82-3-359
3	METALS; GENERAL SPECIFICATION FOR INSPECTION OF	QQ-M-151	57-136
4	STEEL SHEETS AND STRIPS, CARBON AND ALLOY	57-136	DWG 82-3-360
5	ENAMEL, LUSTRELESS, QUICK-DRYING	JAN-E-74	DWG 82-3-359
6	PRIMER, SYNTHETIC, LACQUER-RESISTING	JAN-P-72	DWG 82-3-359
7	FIN ASSEMBLIES FOR BOMBS	50-B4-3	DWG 82-3-359
8	LACQUER ENAMEL, LUSTRELESS	JAN-L-73	DWG 82-3-359
9	PAINTS AND RELATED MATERIALS, GENERAL SPECIFICATIONS FOR	3-1	JAN-L-73

* THE SPECIFICATION NUMBERS SHOWN ARE BASIC NUMBERS ONLY. WHEN A SPECIFICATION IS REVISED A LETTER IS AFFIXED TO ITS BASIC NUMBER. SPECIFICATIONS REFERRED TO IN THESE SPECIFICATIONS AND NOT LISTED HEREON, SHALL NOT APPLY.



NOTES :- GAGE I D OF FIN SLEEVE WITH 7.84 DIA GO PLUG GAGE. THE PLANE OF BOTTOM OF THE FIN SLEEVE SHALL BE PERPENDICULAR TO THE CENTERLINE OF THE FIN BOX WITHIN $\frac{3}{64}$ INCH AS MEASURED AT THE EXTREME ENDS OF THE FIN BLADES.

FIN ASSEMBLY 82-3-359A6
COAT ALL SURFACES FIRST WITH PRIMER, SYNTHETIC, LACQUER-RESISTING, THEN WITH OLIVE DRAB LACQUER ENAMEL OR OLIVE DRAB ENAMEL.

LIST OF DRAWINGS

LINE NO.	LIST OF DRAWINGS	DRAWING NUMBER
1	FIN ASSEMBLY	82-3-359
2	DETAILS	82-3-360
3		
4	PACKING CRATE	76-16-269
5	PACKING AND MARKING OF CRATE	20-4-286
6	PACKING CRATE (ALTERNATIVE)	76-16-312
7	PACKING AND MARKING OF CRATE (ALT)	20-4-328

NOTICE :- THIS DRAWING SHALL NOT BE USED NOR REPRODUCED EITHER WHOLLY OR IN PART EXCEPT WHEN AUTHORIZED IN CONNECTION WITH UNITED STATES GOVERNMENT PROCUREMENT.

THIS FIN ASSEMBLY FOR USE ON THE FOLLOWING BOMBS :-
BOMB, G.P., 500 LB, AN-M64 AND AN-M64A1.
BOMB, INCENDIARY, 500 LB, AN-M76.
BOMB, GAS, 500 LB, M78 AND AN-M78.

SUPERSEDES 82-3-359 WITHOUT CHANGE NOV 10, 1948.

FIN ASSEMBLY, AN-M109A1 (500 LB SIZE)

MAY 26, 1942

REVISIONS			CLASS	DIVISION	DRAWING	FILE
5	5-7-47		82	3	359	
6	11-10-48					

TOLERANCE ON DIMENSIONS NOT OTHERWISE SPECIFIED
DECIMAL ±
FRACTIONAL ±
ANGULAR ±

DRG. PERTAINS TO

D'TSMAN	TRACER	ENGINEER
TWR	BDC	

CHECKER	ENGINEER
ACJ	

SUBMITTED:
ORD. ENG., ORD. DEPT., U. S. A.

EXAMINED:
COL., ORD. DEPT., U. S. A.

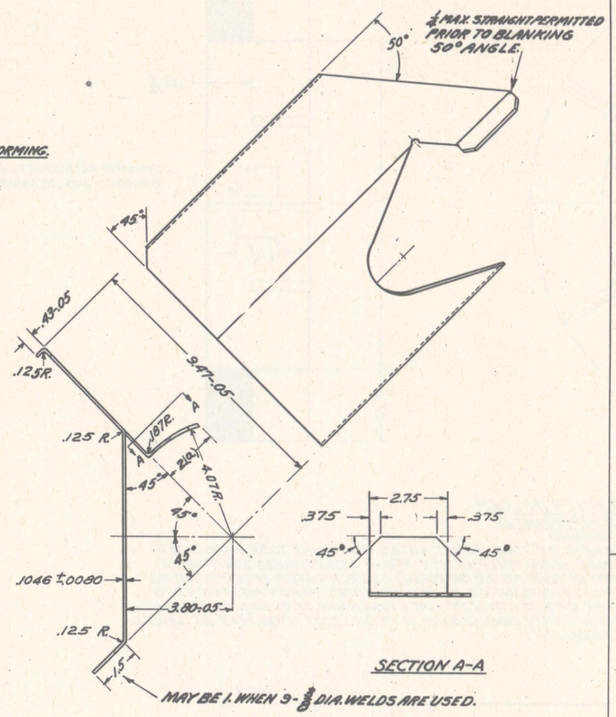
APPROVED BY ORDER OF THE CHIEF OF ORDNANCE:
COL., ORD. DEPT., U. S. A.

D

ORDNANCE DEPT., U. S. A.



ALTERNATIVE METHOD OF FORMING.

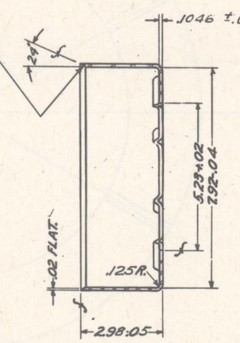


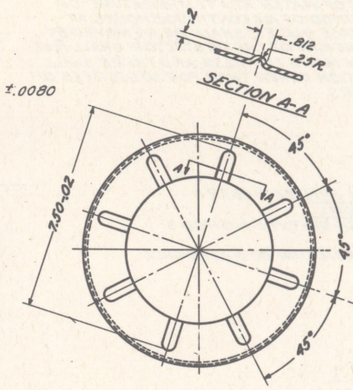
SECTION A-A

FIN 82-3-360A3
STEEL, WD1010, HOT-ROLLED, PICKLED, OR COLD-ROLLED,
TEMPER NO.3 (QUARTER HARD).
FINISH NO.1 (DULL).

(a) MAY BE 2-1/4 WHEN PROJECTION WELDED.

ROUND EDGE WITH .3 INCH RADIUS AT LOWER END OF 24° CHAMFER PERMITTED PROVIDED THAT .02 INCH FLAT ON UPPER END OF 24° CHAMFER IS MAINTAINED.





DEPRESSION RESULTING FROM EMBOSSING OPERATION PERMITTED.

SLEEVE, FIN 82-3-360B3
STEEL, WD1010, HOT-ROLLED, ANNEALED AND PICKLED, OR COLD-ROLLED,
TEMPER NO.4 (SOFT SKIN-ROLLED),
FINISH NO.1 (DULL) OR NO.2 (REGULAR BRIGHT).

REMOVE ALL BURRS.

NOTICE: THIS DRAWING SHALL NOT BE USED NOR REPRODUCED EITHER WHOLLY OR IN PART EXCEPT WHEN AUTHORIZED IN CONNECTION WITH UNITED STATES GOVERNMENT PROCUREMENT.

SCALE, INCHES: 1/4

FIN ASSEMBLY, AN-M109A1 (500 LB. SIZE), DETAILS

MAY 26, 1942

REVISIONS				
1	6-5-44			
2	10-30-44			
3	3-28-45			
4	8-15-45			
5	5-7-47			

DRG. PERTAINS TO
82-3-359

CLASS	DIVISION	DRAWING	FILE
82	3	360	

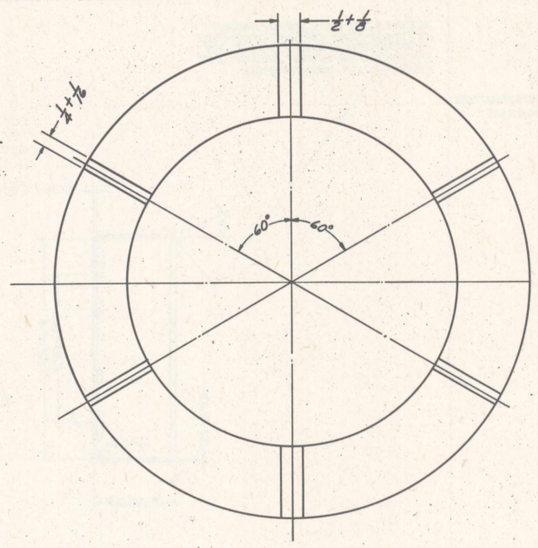
D'TSMAN C.L.K. | TRACER C.L.K. | LDG D'TSMAN [illegible]
CHK'ER N.W.F. | CHIEF D'TSMAN [illegible]
SUBMITTED: [signature] Gen. Gallagher, CHICAGO, U. S. A.
EXAMINED: [signature] R. B. Battley Jr. ENGR. OFF. U. S. A.
APPROVED BY CHIEF OF THE TECH. SERV. ORDNANCE [signature] COL. U. S. A.

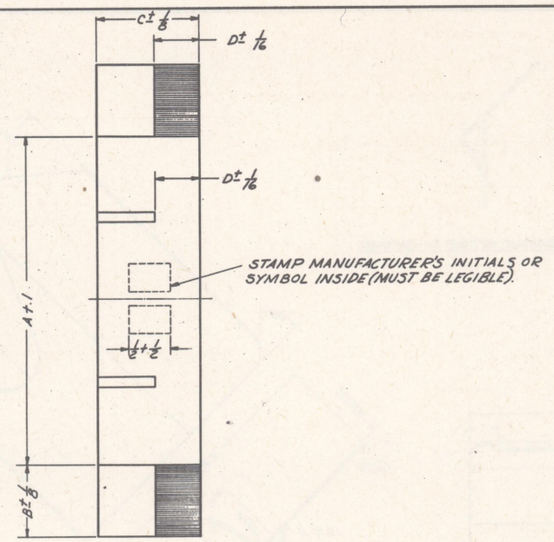
D

ORDNANCE DEPT. U.S.A.

HEAT TREATMENT AND FINAL FINISH

SIZE OF LOTS:-20,000 MAX
WATER ABSORPTION TEST:- FOUR PROTECTORS OUT OF EVERY LOT SHALL BE WEIGHED AND THEN COMPLETELY SUBMERGED UNDER A MINIMUM HEAD OF TWO INCHES OF WATER AT A TEMPERATURE OF NOT LESS THAN 70°F FOR A PERIOD OF 168 CONTINUOUS HOURS. AT THE END OF THIS PERIOD, SURFACE WATER SHALL BE REMOVED BY WIPING, AFTER WIPING, THE WEIGHT OF THE PROTECTOR SHALL NOT EXCEED ITS ORIGINAL WEIGHT BY MORE THAN 2.5%, AND THERE SHALL BE NO EVIDENCE OF DELAMINATION OTHER THAN FOR 90 DEGREES OF THE INNER AND OUTER LAYERS.



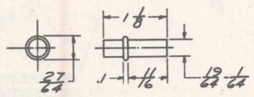


PHYSICAL PROPERTIES

Y.	
T.S.	
EL. %	
RED.	
BR.	
ROCK.	

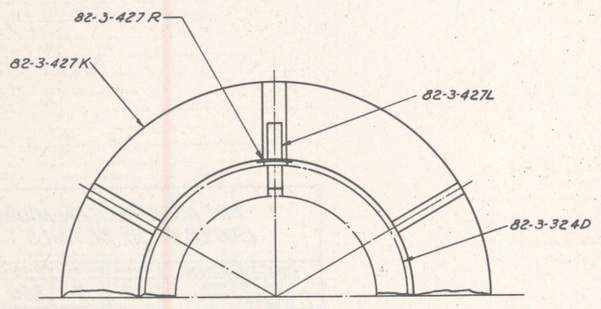
WASHER, LOCK PIN 82-3-427R4
STEEL, COMMERCIAL

TINNERMAN SPEED NUT, PUSH-ON-TYPE NO 1782-3 OR EQUAL.
FOR USE WITH FINLOCK NUT PROTECTOR 82-3-427K ONLY.



PIN, LOCK 82-3-427L4
STEEL, COMMERCIAL

TOLERANCES ON DIMENSIONS TO BE ±1/64 UNLESS OTHERWISE SHOWN.
FOR USE WITH FIN LOCK NUT PROTECTOR, 82-3-427K AND WITH 82-3-427A WHEN USED ON BOMB, G.P. 150 LB., T1.



METHOD SHOWING LOCK PIN ARRANGEMENT FOR USE WITH 130 LB. G.P. T2 BOMB AND 123 LB. CHEM., T3 BOMB AND BOMB, G.P. 150 LB., T1

PROTECTOR, NUT, FIN LOCK
PAPER BOARD, IMPREGNATED
CONVOLUTE WOUND

STANDARD JUTE LINER, MULLEN TEST 70 LBS MIN.; THICKNESS, .018 ± .002"; WEIGHT 3.8 LBS PER POINT. TO BE "HARD SIZED" USING STANDARD PAPERMAKER'S ALUM AND ROSIN SIZE. WIND CONVOLUTELY FROM A CONTINUOUS STRIP WITH A WATER PROOF ADHESIVE (FINDLEY GLUE CO. WATERPROOF GLUE NO. 718 OR EQUAL) ON EACH LAYER. AFTER WINDING RING, ALLOW TO AGE FOR 7 DAYS MINIMUM (ADVISORY ONLY). SUBMERGE IN PARAFFIN (122°F TO 140°F MELTING POINT [A.S.T.M. METHOD] REFINED PARAFFIN) AT A TEMPERATURE OF 250°F TO 260°F FOR A MAXIMUM OF 20 MIN. OR MINIMUM OF 10 MIN. SAW TO DIMENSIONS SHOWN WHEN SUFFICIENTLY COOL (ABOUT 130°F OR LESS). RING MAY BE SAWED TO DIMENSIONS SHOWN BEFORE SUBMERGING IN PARAFFIN.

LINE NUMBER	BOMB DESIGNATION	PROTECTOR PIECEMARK	DIMENSIONS A	B	C	D	APPROX UNIT WEIGHT (POUNDS)	REMARKS
1	250 LB, G.P., AN-M57A1	82-3-427A2	3.49	1 3/8	1 1/2	3/4	1.	
2	500 LB, S.AP., AN-M58A2	82-3-427B2	4.64	1 3/8	1 1/2	3/4	1.3	
3	500 LB, G.P., AN-M64A1	82-3-427E3	5.84	1 3/8	1 1/2	3/4	1.6	
4	1000 LB, S.AP., AN-M59A1	82-3-427B2	4.64	1 3/8	1 1/2	3/4	1.3	
5	1000 LB, G.P., AN-M65A1	82-3-427E3	5.84	1 3/8	1 1/2	3/4	1.6	
6	2000 LB, G.P., AN-M66A1	82-3-427D2	7.13	1 3/8	3	1 15/16	3.4	
7	4000 LB, L.C., AN-M56A1	82-3-427D1	7.13	1 3/8	3	1 15/16	3.4	
8	440 LB., FRAG, T15	82-3-427J4	5.39	1 3/8	1 3/4	3/4	1.75	
9	260 LB, FRAG, AN-M81	82-3-427A2	3.49	1 3/8	1 1/2	3/4	1.	
10	500 LB, CHEM., M78	82-3-427B2	5.84	1 3/8	1 1/2	3/4	1.6	
11	1000 LB, CHEM., AN-M79	82-3-427H2	5.84	3 3/8	1 1/2	3/4	5.5	
12	220 LB, FRAG, AN-M88	82-3-427A4	3.49	1 3/8	1 1/2	3/4	1.	
13	150 LB, G.P., T1	82-3-427A4	3.49	1 3/8	1 1/2	3/4	1.	(a)
14	2000 LB, S.AP., T7	82-3-427F3	5.84	1 3/8	3	1 1/4	2.7	
15	100 LB, G.P., AN-M30A1	82-3-427N3	3.49	1 3/8	1 3/4	3/4	1.	
16	150 LB, G.P., T2	82-3-427K3	4.80	1 3/8	2 3/4	1.	2.5	
17	123 LB, CHEM., T3	82-3-427K3	4.80	1 3/8	2 3/4	1.	2.5	
18								

(a)- FOR PLATE, REINFORCING, PROTECTOR SEE GA2692, REQUIRED FOR USE WITH THESE BOMBS.

NOTICE: THIS DRAWING SHALL NOT BE USED NOR REPRODUCED EITHER WHOLLY OR IN PART EXCEPT WHEN AUTHORIZED IN CONNECTION WITH UNITED STATES GOVERNMENT PROCUREMENT.

PROTECTOR, NUT, FIN LOCK, FOR BOMBS.

OCTOBER 18, 1943	CLASS	DIVISION	DRAWING	FILE
REVISIONS	82	3	427	
4 8-15-45				
5 12-30-48				

TOLERANCE ON DIMENSIONS NOT OTHERWISE SPECIFIED
DECIMAL ±
FRACTIONAL ±
ANGULAR ±

DRAFTSMAN	H.R.	TRACED	E.J.S.
CHECKER	A.C.J.	ENGINEER	

DRG. PERTAINS TO

SUBMITTED:-
ORD. ENG. ORD. DEPT., U.S.A.

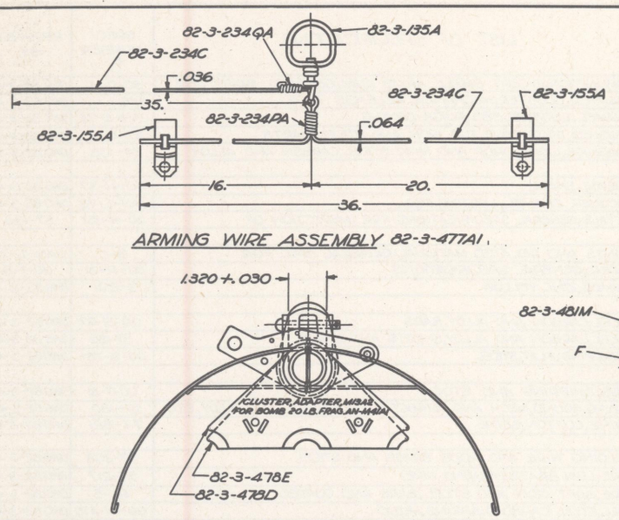
EXAMINED:-
Col., ORD. DEPT., U.S.A.

APPROVED BY ORDER OF THE CHIEF OF ORDNANCE:-
Col., ORD. DEPT., U.S.A.

D

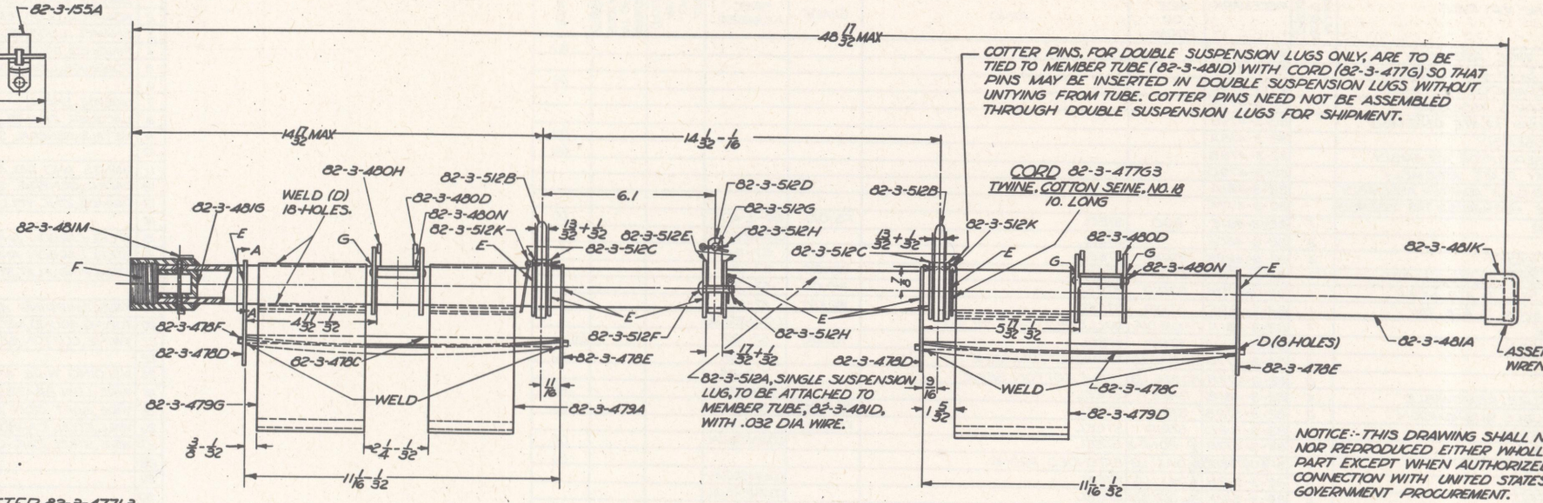
ORDNANCE DEPT., U.S.A.

SUPERSEDES 82-3-427 WITHOUT CHANGE DEC 30, 1948



ARMING WIRE ASSEMBLY 82-3-477A1.

A-REAM MEMBER TUBE IN ASSEMBLY, IF NECESSARY, TO .958-.004
B-COAT INSIDE OF TUBE WITH ZINC YELLOW PRIMER AFTER REAMING.
C-TEST SLUG .9525-.0005 DIA X 2.0 LONG MUST PASS FREELY THROUGH MEMBER TUBE AFTER COATING.
D-FILL THESE HOLES WITH WELD METAL.
E-TWO 130° MIN. WELDS ALONG PIPE CIRCUMFERENCE REQUIRED AT EACH ARROW. WELDS TO BE CENTERED OVER HORIZONTAL AXIS OF PIPE, SEE SECTION A-A.
F-APPLY A LIGHT COAT OF SHELL GREASE TO ADAPTER THREADS AFTER INSIDE OF TUBE IS COATED WITH PRIMER.
G-WELD TOP OUTSIDE, BALANCE INSIDE.



82-3-512A, SINGLE SUSPENSION LUG, TO BE ATTACHED TO MEMBER TUBE, 82-3-481D, WITH .032 DIA. WIRE.

COTTER PINS, FOR DOUBLE SUSPENSION LUGS ONLY, ARE TO BE TIED TO MEMBER TUBE (82-3-481D) WITH CORD (82-3-477G) SO THAT PINS MAY BE INSERTED IN DOUBLE SUSPENSION LUGS WITHOUT UNTYING FROM TUBE. COTTER PINS NEED NOT BE ASSEMBLED THROUGH DOUBLE SUSPENSION LUGS FOR SHIPMENT.

CORD 82-3-477G3
TWINE, COTTON SEINE, NO. 18
10. LONG

NOTICE:- THIS DRAWING SHALL NOT BE USED NOR REPRODUCED EITHER WHOLLY OR IN PART EXCEPT WHEN AUTHORIZED IN CONNECTION WITH UNITED STATES GOVERNMENT PROCUREMENT.

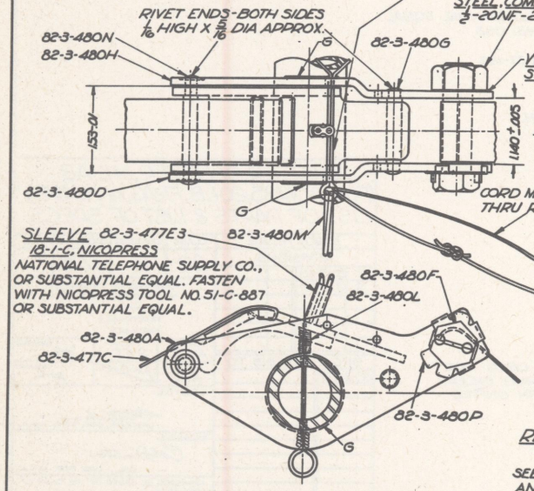
PIN, COTTER 82-3-477L3
STEEL, COMMERCIAL
3/32 DIA X 2 1/4 LONG.



SECTION A-A

NUT, HEX 82-3-477M3
STEEL, COMMERCIAL
3/8-20 NF-2

WASHER, LOCK 82-3-477N3
STEEL, COMMERCIAL
3/8 STD.



VIEW OF RELEASE MECHANISM (ASSEMBLED)

TAG, RELEASE MECHANISM 82-3-477A2
MANILA PAPER, TYPE B, SIZE NO. 1
FIBER CONTENT-15 JU, 15 WO OR 15 SU

1/8 HIGH LETTERS APPROX. AS SHOWN. USE COMMERCIAL BLACK PRINTER'S INK. PRINT ON ONE SIDE ONLY.



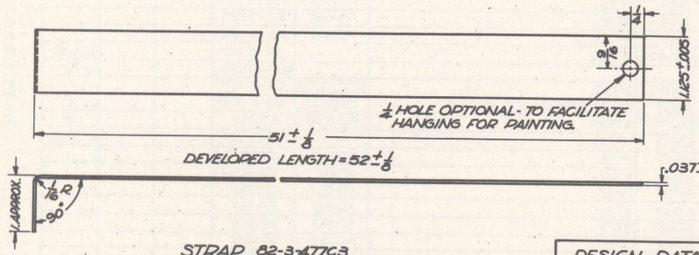
CORD 82-3-477H3
TWINE, COTTON SEINE NO. 6
6. INCHES LONG

CORD MAY BE LOOPED THRU RING.

RELEASE MECHANISM TAG ASSEMBLY 82-3-477K2

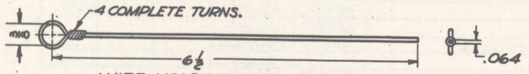
SEE DWG 82-3-477A FOR PROTECTIVE FINISHES AND ALTERNATIVE MATERIAL.

METAL PARTS ASSEMBLY 82-3-477B3
COAT WITH OLIVE DRAB LACQUER ENAMEL
ALIGNMENT OF CORNERS OF EACH PAIR OF NOSE AND FIN SUPPORTS AS MEASURED ON A FLAT PLATE SHALL BE WITHIN 3/32 INCH. ALIGNMENT BETWEEN CORNERS OF FRONT AND REAR PAIRS OF SUPPORTS SHALL BE WITHIN 1/16 INCH.

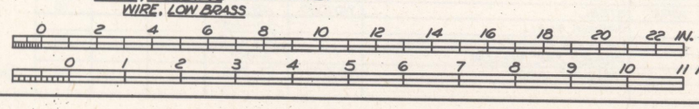


STRAP 82-3-477C3
STEEL, STRIP OR SHEET (MAY BE SHEARED EDGE)
COAT WITH OLIVE DRAB LACQUER ENAMEL OR OLIVE DRAB ENAMEL.

DESIGN DATA
.50 TO .60 CARBON
YIELD - 60,000 LBS/SQ IN.
ULT. TEN - 90,000 TO 110,000 LBS/SQ IN.
EL. 10 % MIN.



WIRE, HOLDING 82-3-477D1
WIRE, LOW BRASS



REMOVE ALL BURRS.

SUPERSEDES 82-3-477 WITHOUT CHANGE MAR 9, 1949

LINE NO	LIST OF DRAWINGS	DRAWINGS NUMBER
1	METAL PARTS ASSEMBLY	82-3-477
2	LIST OF PARTS & LIST OF SPECS.	82-3-477A
3	ASSEMBLIES & DETAILS	82-3-478
4	DETAILS	82-3-479
5	DETAILS	82-3-480
6	DETAILS	82-3-481
7	DETAILS	82-3-512
8		
9		
10		

ADAPTER, CLUSTER, M13A2 (FOR BOMBS, 20 LB., FRAG., AN-M41A1) METAL PARTS ASSEMBLY.

MARCH 17, 1944	CLASS	DIVISION	DRAWING	FILE
REVISIONS	82	3	477	

2	9-15-45	
3	3-9-49	

TOLERANCE ON DIMENSIONS NOT OTHERWISE SPECIFIED
DECIMAL ±
FRACTIONAL ±
ANGULAR ±

DRG. PERTAINS TO 82-0-111

DRAFTSMAN	TRACER	ENGINEER
STB	PEG	

CHECKER A.C.J. — ENGINEER

SUBMITTED: ORD. ENG., ORD. DEPT. U.S.A.

EXAMINED: COL., ORD. DEPT. U.S.A.

APPROVED BY ORDER OF THE CHIEF OF ORDNANCE: COL., ORD. DEPT. U.S.A.

D

ORDNANCE DEPT. U.S.A.

LIST OF PARTS

LINE NO.	NAME OF PART	NUMBER REQ'D PER COMPONENT	PIECEMARK	MATERIAL: SIZE OR FORM	MATERIAL: KIND	MATERIAL: GRADE	MATERIAL: SPEC NUMBER	APPROX UNIT WEIGHT (POUNDS)	APPROX GROSS WT OF RAW STOCK PER 1000 ASSEMBLIES		REMARKS
1	ARMING WIRE ASSEMBLY		82-3-477A								(g)
2	CENTER SWAY PLATE ASSEMBLY		82-3-479A								
3	LONG SEPARATOR ASSEMBLY		82-3-479L								(p)
4	METAL PARTS ASSEMBLY		82-3-477B								
5	NOSE SWAY PLATE ASSEMBLY		82-3-479G								
6	REST ASSEMBLY		82-3-478A								(p)
7	SHORT SEPARATOR ASSEMBLY		82-3-478B								(p)
8	TAIL SWAY PLATE ASSEMBLY		82-3-479D								
9	TUBE AND FUZE ADAPTER ASSEMBLY		82-3-481A								
10	RELEASE MECHANISM TAG ASSEMBLY		82-3-477K								
11	ADAPTER	1	82-3-481E	ROD	STEEL	FS 1010	QQ-S-671				(f)
12	ANGLE	2	82-3-480E		STEEL		COMMERCIAL				
13	ANGLE, STRAP	4	82-3-480K	STRIP	STEEL	WD 1010	57-136				
14	BRACE, SWAY PLATE, CENTER	1	82-3-479C	STRIP	STEEL	WD 1010	57-136				
15	BRACE, SWAY PLATE, NOSE	1	82-3-479K	STRIP	STEEL	WD 1010	57-136				
16	BRACE, SWAY PLATE, TAIL	1	82-3-479F	STRIP	STEEL	WD 1010	57-136				
17	CAP, PIPE	1	82-3-481K	1" NOM DIA	MALLEABLE OR CAST IRON		COMMERCIAL				
18	CLAMP, STRAP	2	82-3-480A	STRIP	STEEL	WD 1010	57-136				(p) (t)
19	CORD	2	82-3-477G	NO.18 X10 LG	TWINE, COTTON, SEINE		T-T-881				(n)
20	CORD	2	82-3-477H	NO.6 X 6 LG	TWINE, COTTON, SEINE		T-T-881				
21	LOCK, FUZE, REMOVABLE	4	82-3-481B	SHEET	STEEL		COMMERCIAL				(a)
22	LUG, DOUBLE SUSPENSION	2	82-3-512B	STRIP	STEEL	WD 1020 TO WD 1035	57-136				(k)
23	LUG, HOISTING	1	82-3-512D	STRIP	STEEL	WD 1010	57-136				
24	NUT, HEX	2	82-3-477M	1/2-20 NF-2	STEEL		COMMERCIAL				(p)
25	PIN, COTTER	4	BFAXI(179252)	1/16 DIA X 1. LG	EXTENDED PRONG						(p)
26	PIN, COTTER	3	82-3-512H	1/16 DIA X 1 LG	STEEL		COMMERCIAL				
27	PIN, COTTER	2	82-3-512K	3/16 DIA X 1 1/4 LG	STEEL		COMMERCIAL				
28	PIN, COTTER	2	82-3-477L	3/32 DIA X 2 1/2 LG	EXTENDED PRONG						(p)
29	PIN, HOISTING	1	82-3-512G	BAR	STEEL	FS 1035	QQ-S-671				
30	PIN, SINGLE SUSPENSION	2	82-3-512F	BAR	STEEL	FS 1035	QQ-S-671				
31	PLATE, COLLAR	2	82-3-512E	STRIP	STEEL	WD 1010	57-136				
32	PLATE, SIDE	2	82-3-480D	STRIP	STEEL	WD 1010	57-136				
33	PLATE, SIDE	2	82-3-480H	STRIP	STEEL	WD 1010 TO WD 1020	57-136				
34	REST, FIN	2	82-3-480C	STRIP	STEEL	WD 1010	57-136				
35	REST, NOSE	2	82-3-480B	STRIP	STEEL	WD 1010	57-136				
36	RIVET, CLAMP BODY	2	82-3-480G	ROD	STEEL	FS 1010 TO FS 1035	QQ-S-671				
37	RIVET, STOP	2	82-3-480N	ROD	STEEL	FS 1010 TO FS 1035	QQ-S-671				
38	ROD, SEPARATOR, LONG	4	82-3-478N	BAR	STEEL	FS 1010	QQ-S-671				
39	ROD, SEPARATOR, MEMBER	4	82-3-478C	BAR	STEEL	FS 1010	QQ-S-671				
40	ROD, SEPARATOR, SHORT	16	82-3-478H	BAR	STEEL	FS 1010	QQ-S-671				
41	SCREW, STRAP	2	82-3-480F	1/2-20 NF-2X2 1/2	STEEL		QQ-S-671				(m) (n) (t)
42	SLEEVE	2	82-3-477E				COMMERCIAL				(d) (g)
43	SLUG	1	82-3-481G	BAR	STEEL	FS 1013, X1015, FS 1020, OR X1020	QQ-S-671				
44	SPRING, RELEASE	2	82-3-480L	WIRE	STEEL, WIRE, MUSIC SPRING	COMP A	QQ-W-470				(p) (t)
45	SPRING, SEPARATOR	68	82-3-478F	STRIP	STEEL	WD 6150	57-136				(c)
46	STRAP	2	82-3-477C	STRIP	STEEL		QQ-S-781				(g) (n) (a)
47	SUPPORT, FIN	2	82-3-478E	STRIP	STEEL	WD 1010	57-136				
48	SUPPORT, NOSE	2	82-3-478D	STRIP	STEEL	WD 1010	57-136				
49	SUPPORT, SEPARATOR	4	82-3-478L	STRIP	STEEL	WD 1010	57-136				
50	SUPPORT, SEPARATOR, FIN	20	82-3-478M	STRIP	STEEL	WD 1010	57-136				
51	SUPPORT, SEPARATOR, NOSE	16	82-3-478K	STRIP	STEEL	WD 1010	57-136				
52	SWAY PLATE, CENTER	1	82-3-479B	STRIP	STEEL	WD 1010	57-136				
53	SWAY PLATE, NOSE	1	82-3-479H	STRIP	STEEL	WD 1010	57-136				
54	SWAY PLATE, TAIL	1	82-3-479E	STRIP	STEEL	WD 1010	57-136				
55	TAG, RELEASE MECHANISM	2	82-3-477F	SIZE NO.1	MANILA PAPER	TYPE "B"	UU-T-81				
56	TUBE, MEMBER	1	82-3-481D								(a)
57	WASHER, LOCK	2	82-3-477N	1/2	STEEL		COMMERCIAL				(p)
58	WASHER, LOCK, STRAP SCREW	2	82-3-480P	STRIP	STEEL	WD 1010	57-136				(m) (t)
59	WASHER, RETAINING	4	82-3-512C	STRIP	STEEL	WD 1020 TO WD 1035	57-136				
60	WIRE, FIRING, SLUG, HOLDING	1	82-3-481M	WIRE	STEEL RUST RESISTING	TYPE I	QQ-W-446				(q)
61	WIRE, HOLDING	2	82-3-477D	WIRE	LOW BRASS		52-217				(p)
62	LUG, SINGLE SUSPENSION	1	82-3-512A	FORGING	STEEL	WD 1020 OR WD 1035	57-105				
63	RING, PULL	2	82-3-480M	WIRE	STEEL	WD 1020	48-5				(c)
64					GREASE, SHELL		50-11-37				
65					LACQUER ENAMEL, OLIVE DRAB		JAN-L-73				(b)
66					PRIMER, ZINC YELLOW		3-201				
67					WELDING ROD	A, B, E OR F	57-203				(a)
68											

LIST OF SPECIFICATIONS

LINE NO.	LIST OF SPECIFICATIONS	SPEC NUMBER *	REQUIRED BY
1	AMMUNITION, EXCEPT SMALL ARMS AMM, GENERAL SPEC FOR	50-0-1	DWG 82-3-477
2	ADAPTER, CLUSTER, MECHANICAL RELEASE TYPE	AXS	DWG 82-3-477
3	ENAMEL, LUSTRELESS, QUICK-DRYING	JAN-E-74	DWG 82-3-477
4	FINISHES, PROTECTIVE, FOR IRON AND STEEL PARTS	57-0-2	DWG 82-3-480
5	FORGINGS, LIGHT DROP AND MISC: STEEL, CARBON AND ALLOY	57-105	DWG 82-3-512
6			
7	GREASE, SHELL	50-11-37	DWG 82-3-477
8	LACQUER ENAMEL, LUSTRELESS	JAN-L-73	DWG 82-3-477
9	METALS; GENERAL SPECIFICATIONS FOR INSPECTION OF	QQ-M-151	57-136
10			
11	PAINTS AND RELATED MATERIAL; GENERAL SPEC FOR	3-1	JAN-L-73
12	PAPER; GENERAL SPECIFICATIONS	UU-P-31	UU-T-81
13	PRIMER, ZINC YELLOW	3-201	DWG 82-3-477
14			
15	STEEL, CARBON AND ALLOY, BARS	QQ-S-671	DWG 82-3-480
16	STEEL, CARBON AND ALLOY, SHEETS AND STRIPS	57-136	DWG 82-3-480
17	STRAPPING: FLAT, STEEL	QQ-S-781	DWG 82-3-477
18			
19	TAGS; SHIPPING AND STOCK	UU-T-81	DWG 82-3-477
20	TUBING, ROUND, MECH AND STRUCT: STEEL, CARBON AND ALLOY, ETC	57-180	DWG 82-3-481
21	TWINE, COTTON, SEINE	T-T-881	DWG 82-3-477
22			
23	WELDING WIRE AND RODS, BRASS AND STEEL	57-203	DWG 82-3-477
24	WIRE, LOW BRASS (ARMING WIRE)	57-217	DWG 82-3-477
25	WIRE, SOFT IRON AND STEEL, BARE AND COATED	48-5	DWG 82-3-480
26	WIRE, STEEL (CARBON): SPRING, MUSIC	QQ-W-470	DWG 82-3-480
27	WIRE, STEEL, ZINC-COATED (FOR WIRE-BOUND BOXES)	QQ-W-446	DWG 82-3-481
28			
29			
30			

* THE SPECIFICATION NUMBERS SHOWN ARE BASIC NUMBERS ONLY. WHEN A SPECIFICATION IS REVISED A LETTER IS AFFIXED TO ITS BASIC NUMBER. SPECIFICATIONS REFERRED TO IN THESE SPECIFICATIONS AND NOT LISTED HEREON, SHALL NOT APPLY.

(a) ALTERNATIVE MATERIAL:- BRAZING ROD, COMMERCIAL.
(b) ALTERNATIVE MATERIAL:- OLIVE DRAB ENAMEL, SPEC JAN-E-74.
(c) ALTERNATIVE MATERIAL:- WD 1095 OR WD 1065.
(d) NO.18-I-C NICOPRESS SLEEVE BY NATIONAL TELEPHONE SUPPLY CO OR SUBSTANTIAL EQUAL.
(e) BLACK IRON (EXTRA STRONG), COMMERCIAL, OR STEEL TUBING, WD 1010 TO WD 1035, TYPE I, II, III OR IV, SPEC 57-180.
(f) ALTERNATIVE MATERIAL:- STEEL TUBING, WD 1010, TYPE I, II, III OR IV, SPEC 57-180.
(g) NOT SUPPLIED BY METAL PARTS MANUFACTURER.
(h) WHEN MADE BY FORGING USE, SPEC 57-105.
(m) STEEL TO BE USED: FS 8630, FS 8640, FS 9135, FS 4140 OR FS 4145.
(n) ALTERNATIVE MATERIAL:- COMMERCIAL CORD OF EQUIVALENT STRENGTH.
(p) THESE ITEMS SHIPPED SEPARATELY.
(r) MUST MEET REQUIREMENTS OF DRAWING.
(s) ALTERNATIVE MATERIAL:- COLD ROLLED BAR, SPEC QQ-S-671(2).
(t) PROTECTIVE FINISHES:- TYPE I, CLASS TS, RS OR RSC, SPEC 57-0-2.

NOTICE:- THIS DRAWING SHALL NOT BE USED NOR REPRODUCED EITHER WHOLLY OR IN PART EXCEPT WHEN AUTHORIZED IN CONNECTION WITH UNITED STATES GOVERNMENT PROCUREMENT.

SUPERSEDES 82-3-477A WITHOUT CHANGE MARCH 9, 1949

ADAPTER, CLUSTER, M13A2 (FOR BOMBS, 20LB, FRAG, AN-M41A1) LIST OF PARTS & LIST OF SPECS.

MARCH 17, 1944

REVISIONS			
2	8-15-45		
3	3-9-49		

DRG. PERTAINS TO 82-3-477

CLASS	DIVISION	DRAWING	FILE
82	3	477A	

TOLERANCE ON DIMENSIONS NOT OTHERWISE SPECIFIED
DECIMAL ±
FRACTIONAL ±
ANGULAR ±

D'FTSMAN	TRACER	ENGINEER
A.J.B	REC	

CHECKER	ENGINEER
A.C.J	

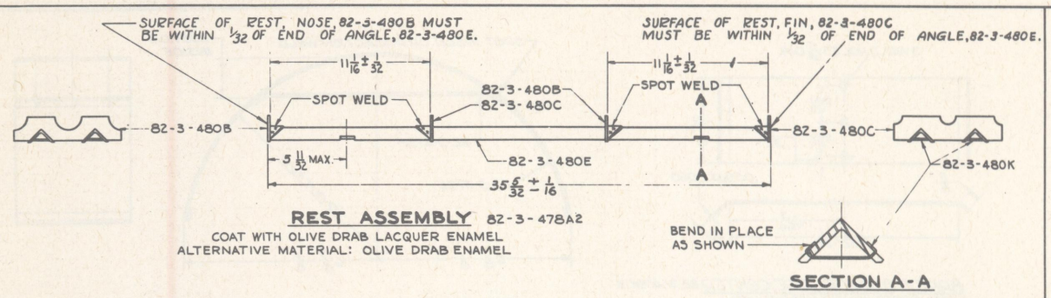
SUBMITTED:
ORD. ENG., ORD. DEPT. U. S. A.

EXAMINED:
COL., ORD. DEPT. U. S. A.

APPROVED BY ORDER OF THE CHIEF OF ORDNANCE:
COL., ORD. DEPT. U. S. A.

D

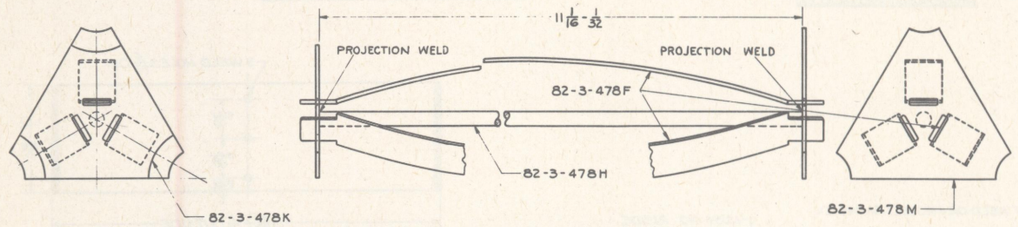
ORDNANCE DEPT., U. S. A.



REST ASSEMBLY 82-3-478A2

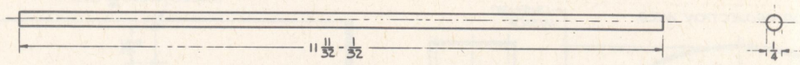
COAT WITH OLIVE DRAB LACQUER ENAMEL
ALTERNATIVE MATERIAL: OLIVE DRAB ENAMEL

SECTION A-A



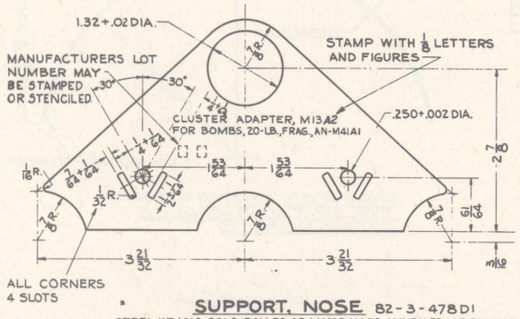
SHORT SEPARATOR ASSEMBLY 82-3-478B1

COAT WITH OLIVE DRAB LACQUER ENAMEL
ALTERNATIVE MATERIAL:- OLIVE DRAB ENAMEL



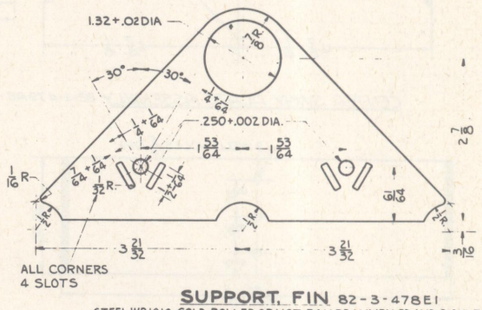
ROD, SEPARATOR, MEMBER 82-3-478C1

STEEL, WD1010, COLD DRAWN



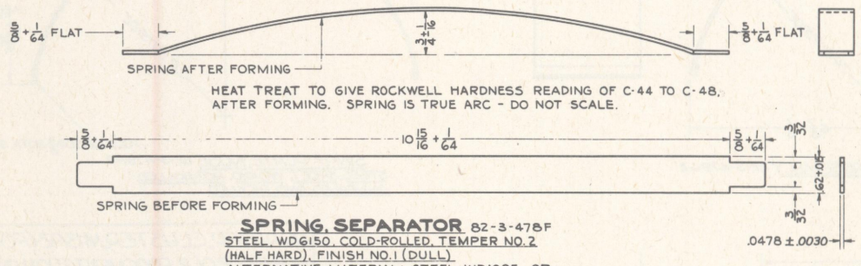
SUPPORT, NOSE 82-3-478D1

STEEL, WD1010, COLD-ROLLED OR HOT-ROLLED, ANNEALED AND PICKLED
.1046 ±.0070 THICK



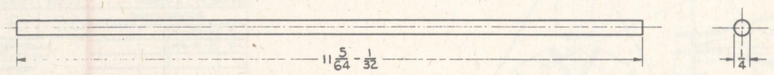
SUPPORT, FIN 82-3-478E1

STEEL, WD1010, COLD-ROLLED OR HOT-ROLLED, ANNEALED AND PICKLED
1046 ±.0070 THICK



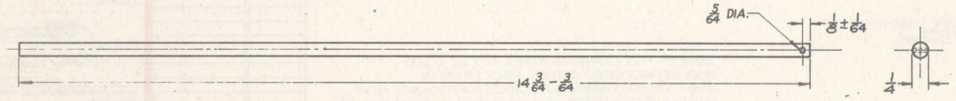
SPRING, SEPARATOR 82-3-478F

STEEL, WD6150, COLD-ROLLED, TEMPER NO. 2 (HALF HARD), FINISH NO. 1 (DULL)
ALTERNATIVE MATERIAL: STEEL WD1095 OR WD1065, COLD-ROLLED, TEMPER NO. 2 (HALF HARD), FINISH NO. 1 (DULL)



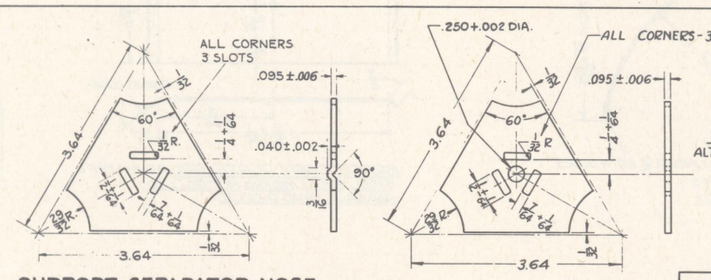
ROD, SEPARATOR, SHORT 82-3-478H1

STEEL, WD1010, COLD-DRAWN



ROD, SEPARATOR, LONG 82-3-478N1

STEEL, WD1010, COLD-DRAWN

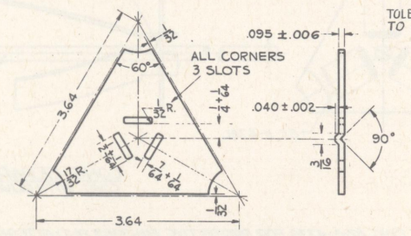


SUPPORT, SEPARATOR 82-3-478L1

STEEL, WD1010, COLD-ROLLED
TEMPER NO. 2 (HALF HARD) FINISH NO. 1 (DULL)
ALTERNATIVE: HOT-ROLLED, ANNEALED AND PICKLED

SUPPORT, SEPARATOR, NOSE 82-3-478K

STEEL, WD1010, COLD-ROLLED
TEMPER NO. 2 (HALF HARD) FINISH NO. 1 (DULL)
ALTERNATIVE: HOT-ROLLED, ANNEALED AND PICKLED



SUPPORT, SEPARATOR, FIN 82-3-478M

STEEL, WD1010, COLD-ROLLED, TEMPER NO. 2 (HALF HARD) FINISH NO. 1 (DULL)
ALTERNATIVE: HOT-ROLLED, ANNEALED AND PICKLED

TOLERANCE ON ALL FRACTIONAL DIMENSIONS TO BE ± 1/64 UNLESS OTHERWISE SHOWN.

REMOVE ALL BURRS

SCALE 1/1, 1/4

ADAPTER, CLUSTER, M13A2 (FOR BOMBS 20 LB., FRAGMENTATION, AN-M41A1) DETAILS

MAR 17 1944

REVISIONS		
1	5-14-45	
2	8-15-45	

DRG. PERTAINS TO 82-3-477

CLASS	DIVISION	DRAWING	FILE
82	3	478	

TOLERANCE ON DIMENSIONS NOT OTHERWISE SPECIFIED
DECIMAL ±
FRACTIONAL ±
ANGULAR ±

DFTSMAN S.T.B. | TRACER A.N.A. | PR. CHK.
CHECKED H.R. | PRIN. ENG. SUPR.

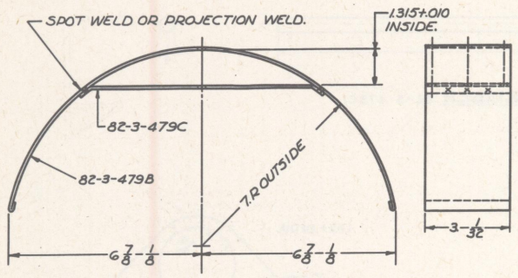
SUBMITTED: C. Marchman, PRINCIPAL ENGINEER, ORD. DEPT. U.S.A.

EXAMINED: R. B. Rutledge Jr., COL., ORD. DEPT. U.S.A.

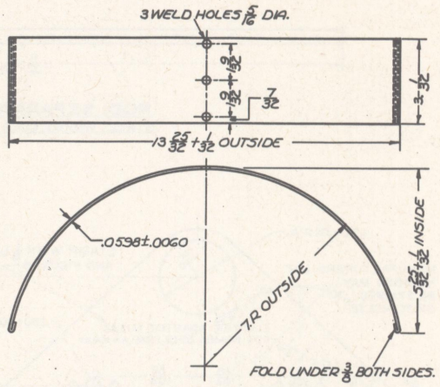
APPROVED BY ORDER OF THE CHIEF OF ORDNANCE: G. Luke, COL., ORD. DEPT. U.S.A.

D

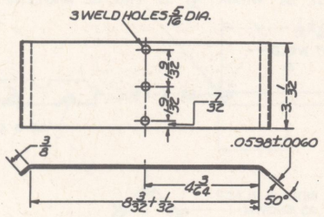
ORDNANCE DEPT., U.S.A.



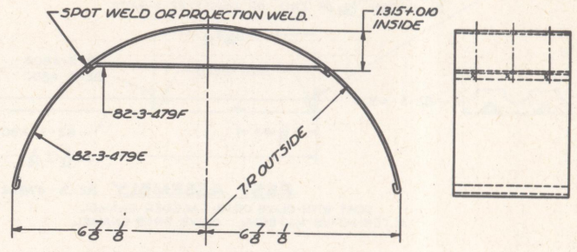
CENTER SWAY PLATE ASSEMBLY 82-3-479A3



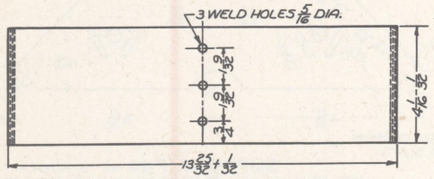
SWAY PLATE, CENTER 82-3-479B3
STEEL, SHEET, WD1010, HOT-ROLLED, ANNEALED AND PICKLED.

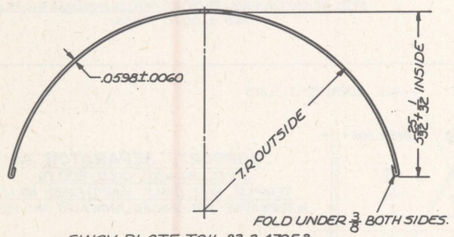


BRACE, SWAY PLATE, CENTER 82-3-479C3
STEEL, SHEET, WD1010, HOT-ROLLED, ANNEALED AND PICKLED

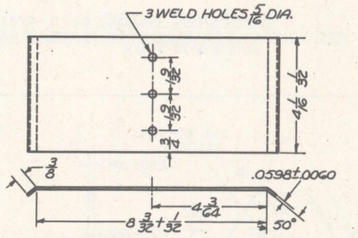


TAIL SWAY PLATE ASSEMBLY 82-3-479D3

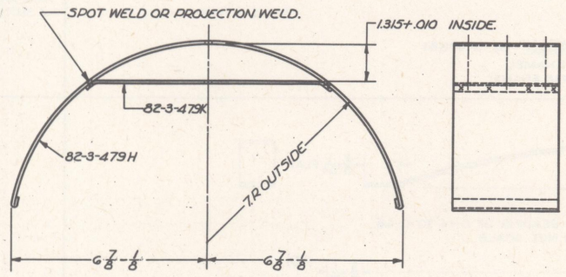




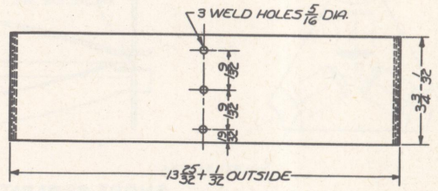
SWAY PLATE, TAIL 82-3-479E3
STEEL, SHEET, WD1010, HOT-ROLLED, ANNEALED AND PICKLED

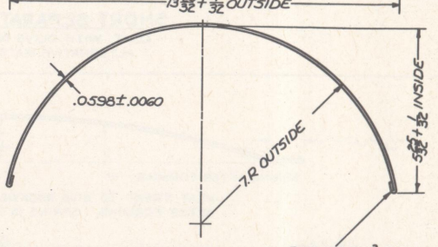


BRACE, SWAY PLATE, TAIL 82-3-479F3
STEEL, SHEET, WD1010, HOT-ROLLED, ANNEALED AND PICKLED

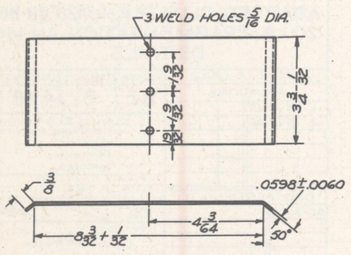


NOSE SWAY PLATE ASSEMBLY 82-3-479G2

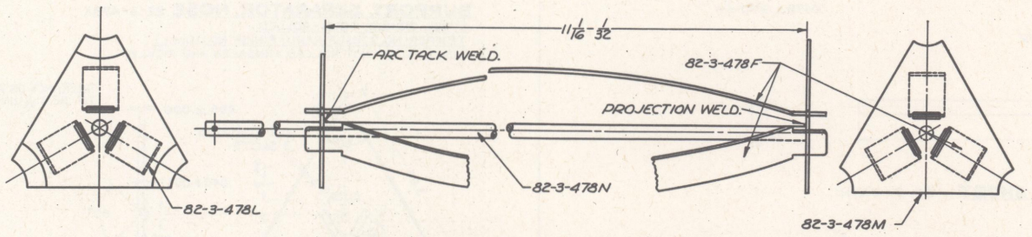




SWAY PLATE, NOSE 82-3-479H3
STEEL, SHEET, WD1010, HOT-ROLLED, ANNEALED AND PICKLED



BRACE, SWAY PLATE NOSE 82-3-479K3
STEEL, SHEET, WD1010, HOT-ROLLED, ANNEALED AND PICKLED



LONG SEPARATOR ASSEMBLY 82-3-479L3
COAT WITH OLIVE DRAB LACQUER ENAMEL.

SEE DWG 82-3-477A FOR PROTECTIVE FINISHES AND ALTERNATIVE MATERIAL.

NOTICE:-THIS DRAWING SHALL NOT BE USED NOR REPRODUCED EITHER WHOLLY OR IN PART EXCEPT WHEN AUTHORIZED IN CONNECTION WITH UNITED STATES GOVERNMENT PROCUREMENT.

SUPERSEDES 82-3-479 WITHOUT CHANGE MARCH 9, 1949

REMOVE ALL BURRS.

SCALE, INCHES, 4-1-1-1/2

ADAPTER, CLUSTER, M13A2 (FOR BOMBS, 20LB, FRAGMENTATION, AN-M41A) DETAILS.

MARCH 17 1944

REVISIONS	
2	8-15-45
3	3-9-49

DRG. PERTAINS TO 82-3-477

CLASS	DIVISION	DRAWING	FILE
82	3	479	

TOLERANCE ON DIMENSIONS NOT OTHERWISE SPECIFIED
DECIMAL ±
FRACTIONAL ± 1/64
ANGULAR ±

D'TSMAN	TRACER	ENGINEER
A.J.B.	E.J.S.	D.M.R.

CHECKER A.C.J.

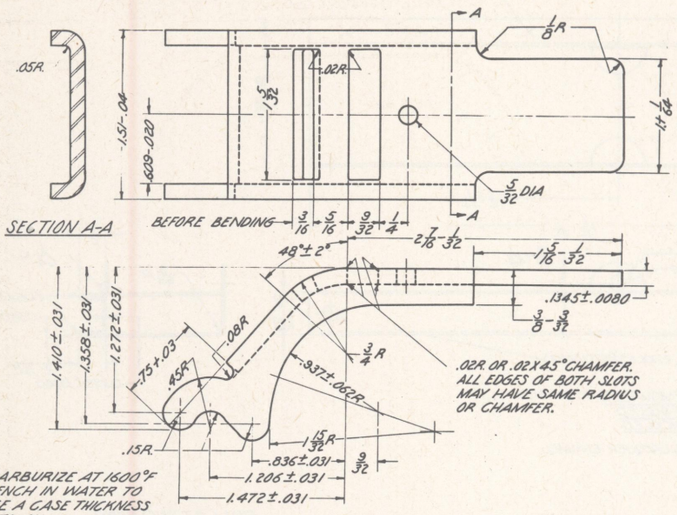
SUBMITTED:-
O.R.D. 6ths, ORD. DEPT., U.S.A.

EXAMINED:-
COL., ORD. DEPT., U.S.A.

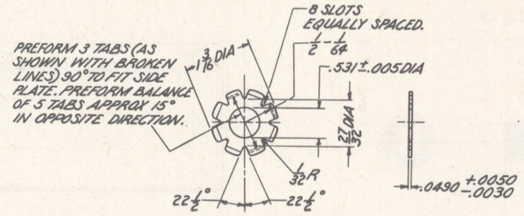
APPROVED BY ORDER OF THE CHIEF OF ORDNANCE:-
COL., ORD. DEPT., U.S.A.

D

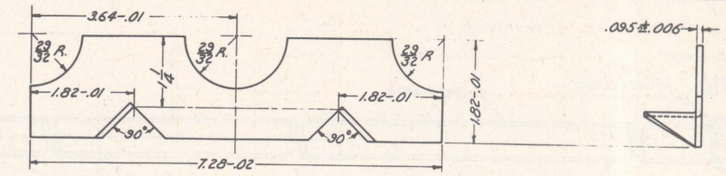
ORDNANCE DEPT., U.S.A.



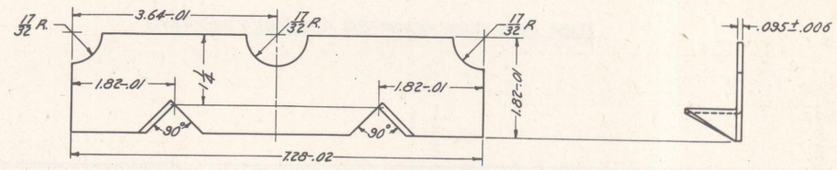
CLAMP, STRAP 82-3-480A3
STEEL, WD.1010, HOT-ROLLED



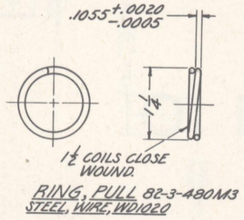
WASHER, LOCK, STRAP SCREW 82-3-480P3
STEEL, STRIP, WD.1010, HOT-ROLLED



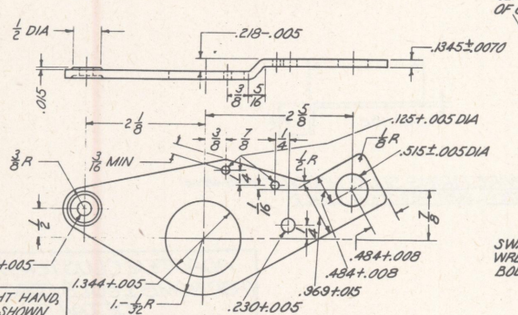
REST, NOSE 82-3-480B
STEEL, STRIP, WD.1010, COLD-ROLLED
TEMPER NO. 2 (HALF HARD) FINISH NO. 1 (DULL) OR HOT-ROLLED, ANNEALED AND PICKLED



REST, FIN 82-3-480C
STEEL, STRIP, WD.1010, COLD-ROLLED
TEMPER NO. 2 (HALF HARD) FINISH NO. 1 (DULL) OR HOT-ROLLED, ANNEALED AND PICKLED

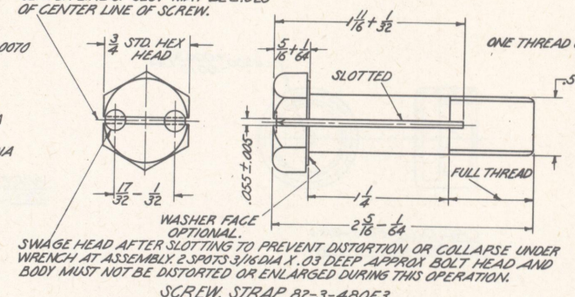


RING, PULL 82-3-480M3
STEEL, WIRE, WD.1020

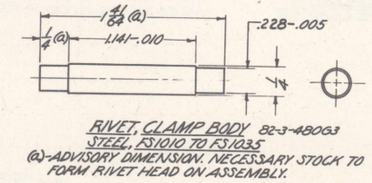


82-3-480D2	RIGHT HAND, AS SHOWN
82-3-480H2	LEFT HAND, OPPOSITE TO THAT SHOWN

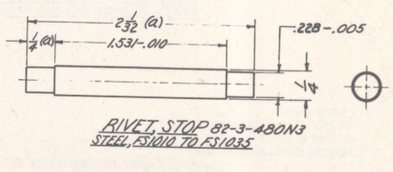
PLATE, SIDE (SEE TABLE)
STEEL, STRIP, WD.1010 TO WD.1020, COLD ROLLED OR HOT ROLLED, ANNEALED AND PICKLED



SCREW, STRAP 82-3-480F3
STEEL, FS 8630, FS 8640, FS 3135, FS 4140 OR FS 4145
FINISH 12B
MINIMUM YIELD-130,000 LBS/SQ IN
TENSILE-150,000 LBS/SQ IN MINIMUM
ROCKWELL C30 TO C38

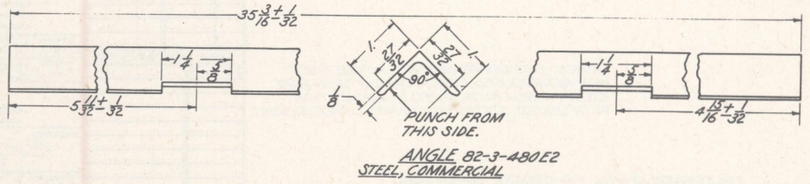


RIVET, CLAMP BODY 82-3-480G3
STEEL, FS1010 TO FS1035
(a)-ADVISORY DIMENSION. NECESSARY STOCK TO FORM RIVET HEAD ON ASSEMBLY.

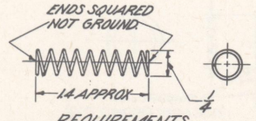


RIVET, STOP 82-3-480N3
STEEL, FS1010 TO FS1035

NOTICE:- THIS DRAWING SHALL NOT BE USED NOR REPRODUCED EITHER WHOLLY OR IN PART EXCEPT WHEN AUTHORIZED IN CONNECTION WITH UNITED STATES GOVERNMENT PROCUREMENT.



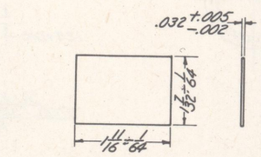
ANGLE 82-3-480E2
STEEL, COMMERCIAL



REQUIREMENTS
A-SOLID HEIGHT NOT OVER 5/16
B-WIND RIGHT HAND.
C-SEASON THOROUGHLY AFTER WINDING.
D-TREAT TO REMOVE EMBRITTLEMENT, WITHIN 24 HOURS AFTER PLATING.
E-LOAD AT 5/8 INCH, 7.5 ± 1.0 LBS.
F-LOAD AT ASSEMBLED HEIGHT.

ADVISORY DATA
(MAY BE VARIED TO MEET REQUIREMENTS)
A-DIAMETER OF WIRE = .029
B-TOTAL NUMBER OF COILS = 10 1/2
C-NUMBER OF ACTIVE COILS = 8 1/2
D-ADJUST FREE HEIGHT TO MEET LOAD REQUIREMENTS. SUGGESTED TRIAL FREE HEIGHT = 1 1/2 INCHES.
E-SEASON BY HEATING TO 500°F FOR AT LEAST 30 MINUTES AS SOON AFTER PLATING AS PRACTICABLE.

SPRING, RELEASE 82-3-480L3
STEEL, SPRING, MUSIC WIRE, COMP A



ANGLE, STRAP 82-3-480K3
STEEL STRIP, WD.1010, HOT-ROLLED ANNEALED AND PICKLED

SUPERSEDES 82-3-480 WITHOUT CHANGE MARCH 9, 1949

SEE DWG 82-3-477A FOR PROTECTIVE FINISHES AND ALTERNATIVE MATERIAL.

REMOVE ALL BURRS.

SCALE, INCHES, 2/1

ADAPTER, CLUSTER, M13A2 (FOR BOMBS 20 LB., FRAGMENTATION, AN-M41A1) DETAILS

MARCH 17, 1944

REVISIONS

2	8-15-49
3	3-9-49

DRG. PERTAINS TO 82-3-477

CLASS	DIVISION	DRAWING	FILE
82	3	480	

TOLERANCE ON DIMENSIONS NOT OTHERWISE SPECIFIED
DECIMAL ±
FRACTIONAL ± 1/64
ANGULAR ±

D'FTSMAN S.T.B. | TRACER J.M.G. | ENGINEER | CHECKER A.C.V. | ENGINEER

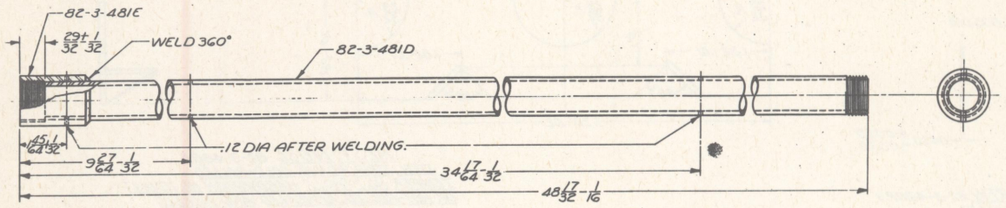
SUBMITTED:- ORD. DEPT., U.S.A.

EXAMINED:- COL., ORD. DEPT. U.S.A.

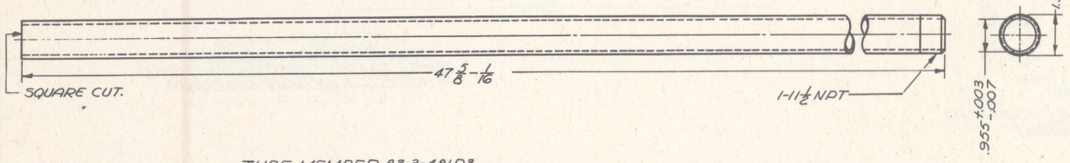
APPROVED BY ORDER OF THE CHIEF OF ORDNANCE:- COL., ORD. DEPT. U.S.A.

D

ORDNANCE DEPT., U.S.A.

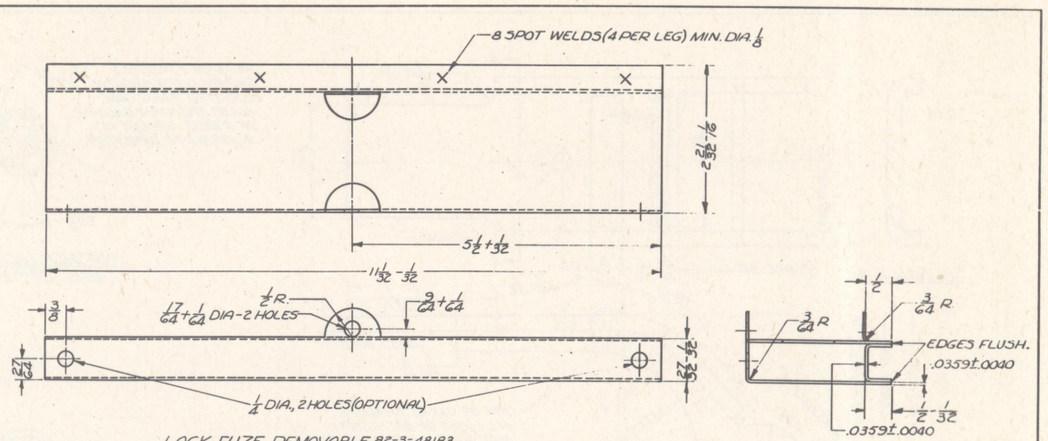


TUBE AND FUZE ADAPTER ASSEMBLY 82-3-481A3



TUBE MEMBER 82-3-481D3
PIPE, IRON, 1 INCH STD., EXTRA STRONG OR STEEL TUBING, WD 1010 TO 1035, TYPE I, II, III OR IV

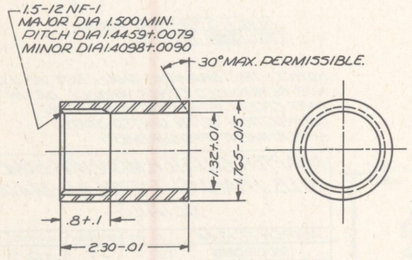
NOTE:- SEE FINISH DIMENSIONS ON DRAWING NO. 82-3-477B, INTERIOR FINISH 125



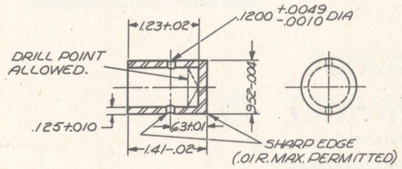
LOCK, FUZE, REMOVABLE 82-3-48183
STEEL, WD1010, HOT-ROLLED
ANNEALED AND PICKLED

COAT WITH OLIVE DRAB LACQUER ENAMEL.

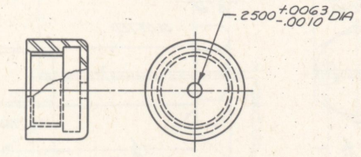
PIN, COTTER BFAX1
1/16 DIA. X 1. LONG (EXTENDED PRONG)
ORDNANCE PART NO. 17925Z



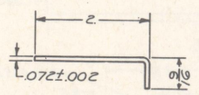
ADAPTER 82-3-481E3
STEEL, FS1010, COLD-DRAWN
FINISH 125



SLUG 82-3-481G3
STEEL, FS1015, X1015, F.S. 1020 OR X1020, COLD-DRAWN
FINISH 125



CAP, PIPE 82-3-481K3
STANDARD 1. NOM. PIPE CAP



WIRE, FIRING SLUG HOLDING 82-3-481M1
STEEL, RUST RESISTING, TYPE I

ADAPTER, CLUSTER, M13A2 (FOR BOMBS, 20LB, FRAG, AN-M41A1) DETAILS

MARCH 17 1944	CLASS	DIVISION	DRAWING	FILE
REVISIONS	82	3	481	
2 8-15-45				
3 4-2-49				

TOLERANCE ON DIMENSIONS NOT OTHERWISE SPECIFIED
DECIMAL ±
FRACTIONAL ±
ANGULAR ±

D'FTSMAN C.W.S | TRACER E.J.S. | ENGINEER
CHECKER A.C.J. | ENGINEER

DRG. PERTAINS TO
82-3-477

SUBMITTED:-
ORD. ENG., ORD. DEPT., U. S. A.

EXAMINED:-
COL., ORD. DEPT., U. S. A.

APPROVED BY ORDER OF THE CHIEF OF ORDNANCE:-
COL., ORD. DEPT., U. S. A.

D

ORDNANCE DEPT., U. S. A.

NOTICE:- THIS DRAWING SHALL NOT BE USED NOR REPRODUCED EITHER WHOLLY OR IN PART EXCEPT WHEN AUTHORIZED IN CONNECTION WITH UNITED STATES GOVERNMENT PROCUREMENT.

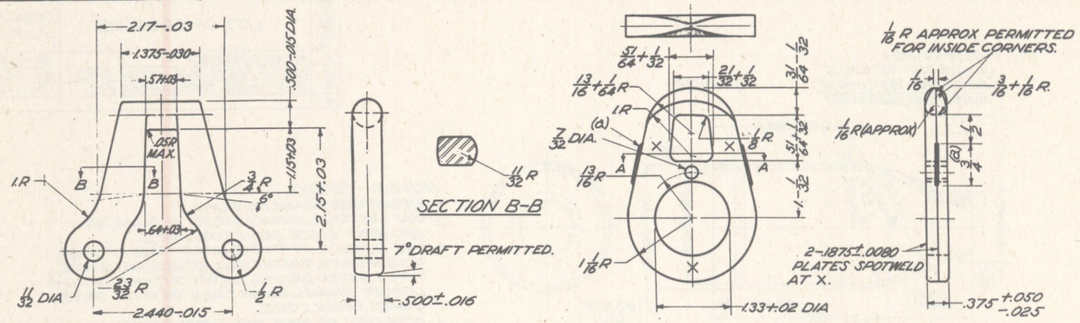
TOLERANCE ON ALL FRACTIONAL DIMENSIONS TO BE ± 1/64 UNLESS OTHERWISE SHOWN.

SEE DWG 82-3-477A FOR PROTECTIVE FINISHES AND ALTERNATIVE MATERIAL.

REMOVE ALL BURRS.

SCALE, INCHES, 1/1 - 1/2

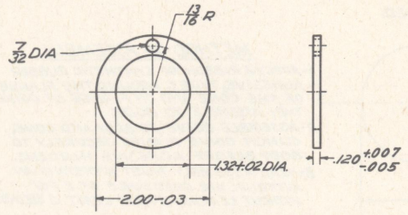
SUPERSEDES 82-3-481 WITHOUT CHANGE APRIL 2, 1949



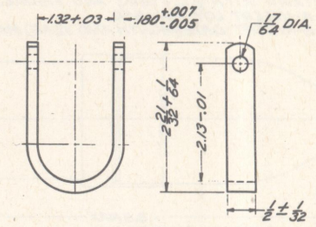
NOTE:- RADIUS OF 1/16 APPROX ON ALL EDGES UNLESS OTHERWISE SHOWN.

LUG, SINGLE SUSPENSION 82-3-512A3
STEEL, FORGING, WD1020 OR WD1035

D. SURFACE OF TRUNNION TO BE SMOOTH. INSIDE SURFACE OF LUG TO BE SMOOTH FROM BOTTOM OF TRUNNION DOWN 3/4 INCH.
(a) IN LIEU OF SPOT WELDING, LUGS MAY BE ARC WELDED AS SHOWN. WELD MAY BE RECESSED. WELD MUST NOT PROTRUDE MORE THAN 1/16 INCH.

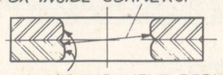


WASHER, RETAINING 82-3-512C5
STEEL, STRIP, WD1020 TO 1035, HOT-ROLLED



LUG, HOISTING 82-3-512D5
STEEL, STRIP, WD1010, HOT-ROLLED

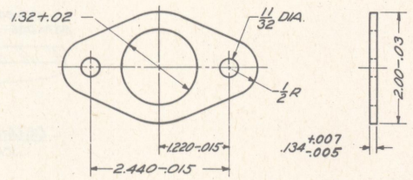
1/16 R APPROX. PERMITTED FOR INSIDE CORNERS.



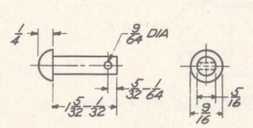
1/16 MAX. MISALIGNMENT PERMITTED, PROVIDED INSIDE CORNERS HAVE COINED RADIUS AND OPENING IS WITHIN DRAWING LIMITS.

SECTION A-A

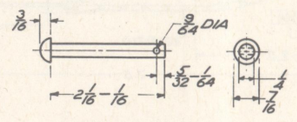
LUG, DOUBLE SUSPENSION 82-3-512B2
STEEL, WD1020 TO 1035, HOT-ROLLED



PLATE, COLLAR 82-3-512E5
STEEL, STRIP, WD1010, HOT-ROLLED



PIN, SINGLE SUSPENSION 82-3-512F5
STEEL, FS1035, AS-COLD-FINISHED

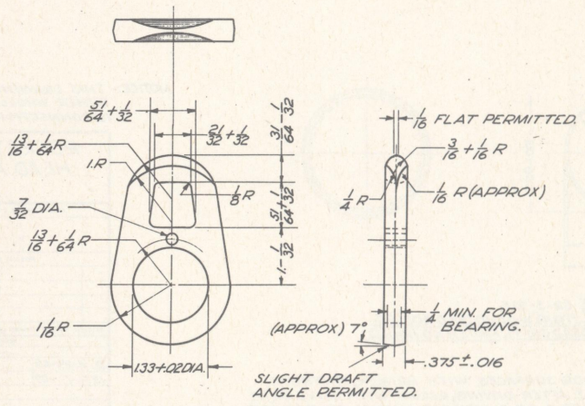


PIN, HOISTING 82-3-512G5
STEEL, FS1035, AS-COLD-FINISHED

PIN, COTTER 82-3-512H
STEEL, COMMERCIAL
1/8 DIA. X 1 LONG

PIN, COTTER 82-3-512K
STEEL, COMMERCIAL
3/16 DIA. X 1/4 LONG

NOTE:- ONE LEG 1/32 MIN. SHORTER.



LUG, DOUBLE SUSPENSION (ALTERNATIVE) 82-3-512L3
STEEL, FORGING, WD1020 TO WD1035

THESE PARTS ARE USED WITH THE FOLLOWING:
ADAPTER CLUSTER M13A2 DWG. 82-3-477
ADAPTER CLUSTER M14 DWG. 82-3-501

NOTICE:- THIS DRAWING SHALL NOT BE USED NOR REPRODUCED EITHER WHOLLY OR IN PART EXCEPT WHEN AUTHORIZED IN CONNECTION WITH UNITED STATES GOVERNMENT PROCUREMENT.

SUPERSEDES 82-3-512 WITHOUT CHANGE FEB 21, 1949

REMOVE ALL BURRS.

SCALE, INCHES, 1

ADAPTER, CLUSTER SUSPENSION & HOISTING LUGS. DETAILS

NOVEMBER 20, 1944

REVISIONS	
3	8-15-43
4	2-21-49
5	3-20-50

DRG. PERTAINS TO
82-3-477
82-3-501

CLASS	DIVISION	DRAWING	FILE
82	3	512	

TOLERANCE ON DIMENSIONS NOT OTHERWISE SPECIFIED
DECIMAL ±
FRACTIONAL ±
ANGULAR ±

D'FTSMAN	TRACER	ENGINEER
ALW.	B.D.C.	
CHECKER		ENGINEER
ACU		

SUBMITTED:- ORD ENG. ORD. DEPT. U.S.A.

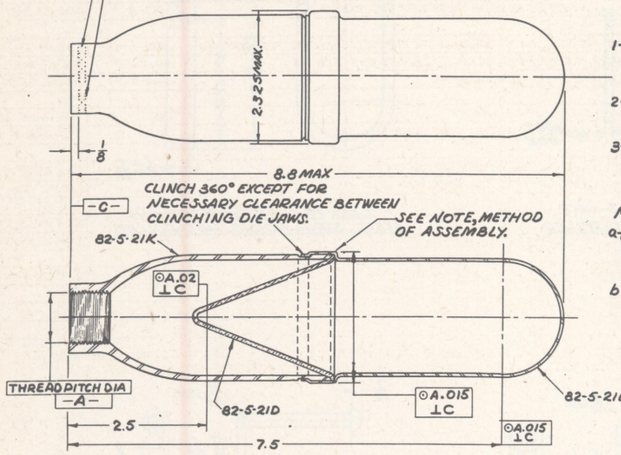
EXAMINED:- C.R. Dutton COL., ORD. DEPT. U.S.A.

APPROVED BY ORDER OF THE CHIEF OF ORDNANCE:- J.H. Hamel COL., ORD. DEPT. U.S.A.

D

ORDNANCE DEPT., U.S.A.

STAMP WITH $\frac{1}{8}$ LETTERS AND FIGURES .01 DEEP
A-INSERT LOT NUMBER.
B-INSERT DATE (MONTH AND YEAR) MANUFACTURED.

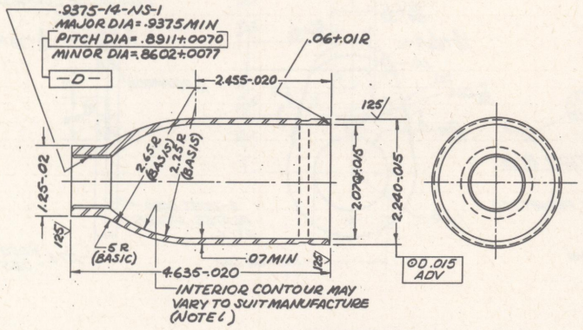


HEAD ASSEMBLY 82-5-21A/3

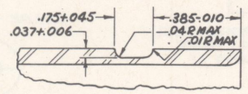
METHOD OF ASSEMBLY

1-APPLY A RIBBON OF SYNTHETIC RUBBER ADHESIVE, TYPE I, AROUND THE FLANGE OF THE CONE AND ON FLANGE OF OGIVE THEN ASSEMBLE TO BODY.
2-ASSEMBLE OGIVE TO BODY AND CONE, CLINCH OGIVE FLANGE SECURELY TO BODY BEFORE ADHESIVE HARDENS.
3-HEAD ASSEMBLY MUST WITHSTAND AN INTERNAL AIR PRESSURE OF 2 PSI WITHOUT LEAKAGE FOR AT LEAST 15 SECONDS.

NOTES:-
a-TOUCH UP EXTERIOR SURFACES WHERE NECESSARY, WITH OLIVE DRAB LACQUER ENAMEL, GRADE I OR II, OR OLIVE DRAB ENAMEL, GRADE I OR II.
b-REAR FACE OF BODY MAY SHOW TRACES OF PAINT USED ON INTERIOR OR EXTERIOR SURFACES OF BODY.



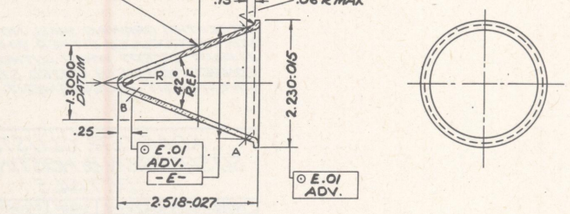
BODY 82-5-21K/3
STEEL, STRIP, WD1010, COLD-ROLLED, TEMPER NO.4 (SOFT SKIN-ROLLED), FINISH NO.1 (DULL).



DETAIL OF GROOVE
SCALE, 4/1

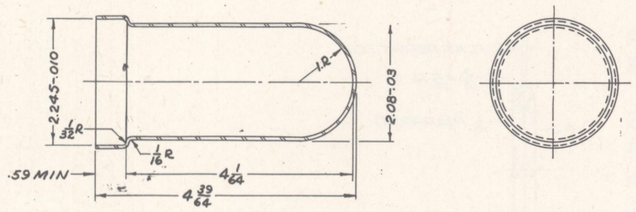
NOTES:- (BODY)
f-WEIGHT=320 GRAMS ±15 GRAMS.
g-COAT INTERIOR SURFACE, EXCEPT THREADS, WITH ACID-PROOF BLACK PAINT, TYPE I OR II.
h-COAT EXTERIOR SURFACES, EXCEPT FACE OF BODY, WITH PRIMER, SYNTHETIC, LACQUER-RESISTING, TYPE I. AFTER DRYING, RECOAT WITH OLIVE DRAB LACQUER ENAMEL, GRADE I OR II OR OLIVE DRAB ENAMEL, GRADE I OR II.
ℓ-BOTH ENDS OF BODY MAY SHOW TRACES OF EITHER INTERIOR OR EXTERIOR PAINT.
j-COAT THREADS WITH EITHER INTERIOR OR EXTERIOR PAINT. THICKNESS MUST NOT EXCEED .0005 INCH.
k-COATING OF EXTERIOR SURFACES MAY BE ACCOMPLISHED AFTER ASSEMBLY OF CONE AND OGIVE
ℓ-ADJUST DIMENSIONS WITHIN TOLERANCES GIVEN TO MEET WEIGHT REQUIREMENTS.

LINE NO.	LIST OF DRAWINGS	DRAWING NUMBER
1	HEAD ASSEMBLY	82-5-21
2	LIST OF PARTS AND LIST OF SPEC	82-5-21A
3	POSITIONAL TOLERANCES, ETC.	30-1-7
4		



CONE 82-5-21D
COPPER, STRIP, SOFT, COLD-ROLLED AND ANNEALED.
ADVISORY THICKNESS .0650±.0025 WEIGHT=98.5-16 GRAMS.

NOTES:-
c-THE DIFFERENCE IN WALL THICKNESS AT POINTS A AND B SHALL NOT EXCEED .012.
d-THE DIFFERENCE BETWEEN MAX AND MIN WALL THICKNESS AT A GIVEN DISTANCE FROM THE BASE SHALL NOT VARY MORE THAN .006
e-COAT EXTERIOR SURFACE OF CONE WITH ACID-PROOF BLACK PAINT TYPE I OR II.



OGIVE 82-5-21E
.0299 +.0040 -.0020 STEEL, STRIP, WD1010, COLD-ROLLED, TEMPER NO.5 (DEAD SOFT), FINISH NO.1 (DULL).

NOTE:-
COAT INTERIOR AND EXTERIOR SURFACES WITH PRIMER, SYNTHETIC, LACQUER-RESISTING, TYPE I. AFTER DRYING, RECOAT WITH OLIVE DRAB LACQUER ENAMEL, GRADE I OR II, OR OLIVE DRAB ENAMEL, GRADE I OR II.

FOR ALTERNATIVE MATERIALS AND PROTECTIVE FINISHES, SEE DWG 82-5-21A

NOTICE:- THIS DRAWING SHALL NOT BE USED OR REPRODUCED EITHER WHOLLY OR IN PART, EXCEPT WHEN AUTHORIZED IN CONNECTION WITH U.S. GOVERNMENT PROCUREMENT.

ROCKET, HE AT, 2.36 INCH M6A6
HEAD ASSEMBLY AND DETAILS

HEAT TREATMENT & PROTECTIVE FINISH	CLASS	DIVISION	DRAWING
1	82	5	21

PHYSICAL PROPERTIES — DRAWING PERTAINS TO: 82-16-6

ORIGINAL DATE OF DRAWING JULY 15, 1942

REVISIONS
12 4-29-49
13 9-13-49

WEIGHT — DO NOT SCALE — APPLY PART NO. TO (As Specified)
TOLERANCES OR DIMENSIONS (Unless Otherwise Specified) 1/64 1/64
SUBMITTED
EXAMINED
APPROVED
COL.
D
ORDNANCE DEPT U.S. ARMY

SUPERSEDES 82-5-21 WITH CHANGE, APRIL 29, 1949

REMOVE ALL BURRS

SCALE, INCHES, 1/1

DD FORM 1 JUN 48 1040
11 NOV 48
SHEET

ARMY SERVICE FORCES
ORDNANCE DEPARTMENT
ORDNANCE DRAWING - SIZE D (ALTERNATIVE)

CL & DIV D

LIST OF PARTS

LINE NO.	NAME OF PART	NUMBER REQD PER COMPONENT	PIECE MARK	MATERIAL: SIZE OR FORM	MATERIAL: KIND	MATERIAL: GRADE	MATERIAL: SPEC NUMBER	APPROXIMATE UNIT WEIGHT (POUNDS)	APPROX GROSS WT OF RAW STOCK PER 1000 ASSEMBLIES	REMARKS
1	HEAD ASSEMBLY		82-5-21A				50-95-3	1.14		
2										
3	BODY	1	82-5-21K	STRIP	STEEL, COLD-ROLLED	WD 1010	57-136	.71		
4	CONE	1	82-5-21D	STRIP	COPPER, COLD-ROLLED AND ANNEALED	SOFT	QQ-C-501	.18		
5										
6	OGIVE	1	82-5-21E	STRIP	STEEL, COLD-ROLLED	WD 1010	57-136	.25		
7										
8										
9					ADHESIVE, RUBBER, SYNTHETIC	TYPE I	62-4			
10					LACQUER ENAMEL, OLIVE DRAB	I OR II	JAN-L-73			(a)
11										
12					PAINT, ACID-PROOF, BLACK	TYPE I OR II	JAN-P-450			
13					PRIMER, SYNTHETIC, LACQUER-RESISTING	TYPE I	JAN-P-72			
14										
15										

(a) ALTERNATIVE MATERIAL:- (b) ENAMEL, OLIVE DRAB, GRADE I OR II, SPEC JAN-E-74.
(b) ALTERNATIVE MATERIALS ARE INTENDED TO BE USED ONLY WHEN PRESCRIBED MATERIALS ARE NOT AVAILABLE.

LIST OF SPECIFICATIONS

LINE NO.	LIST OF SPECIFICATIONS	SPEC NUMBER *	REQUIRED BY
1	AMMUNITION, EXCEPT SMALL ARMS AMMUNITION, GENERAL SPEC FOR	50-0-1	DWG 82-5-21
2	ADHESIVE, SYNTHETIC RUBBER (HOT OR COLD BONDING)	62-4	DWG 82-5-21
3			
4	CLEANING AND PREPARATION OF FERROUS METAL SURFACES FOR ORGANIC PROT COATINGS	JAN-C-490	DWG 82-5-21
5	COPPER; BARS, PLATES, RODS, SHAPES, SHEETS AND STRIPS	QQ-C-501	DWG 82-5-21
6	ENAMEL, LUSTRELESS, QUICK-DRYING	JAN-E-74	DWG 82-5-21
7			
8	LACQUER ENAMEL, LUSTRELESS	JAN-L-73	DWG 82-5-21
9	METALS; GENERAL SPECIFICATION FOR INSPECTION OF	QQ-M-151	57-136
10			
11	PAINT, ACID-PROOF, BLACK (FOR AMMUNITION)	JAN-P-450	DWG 82-5-21
12	PAINTS AND RELATED MATERIALS, GEN SPEC FOR INSP AND TESTS	3-1	JAN-L-73
13			
14	PRIMER, SYNTHETIC, LACQUER-RESISTING	JAN-P-72	DWG 82-5-21
15	ROCKET, HE, AT, 2.36-INCH, M6A6, PRAC, AT, M7A1, AND SMOKE, WP, M604A4, METAL PARTS FOR	50-95-3	DWG 82-5-21
16			
17	STEEL, CARBON AND ALLOY; SHEETS AND STRIPS	57-136	DWG 82-5-21
18			
19			
20			

* THE SPECIFICATION NUMBERS SHOWN ARE BASIC NUMBERS ONLY. WHEN A SPECIFICATION IS REVISED A LETTER IS AFFIXED TO ITS BASIC NUMBER. SPECIFICATIONS REFERRED TO IN THESE SPECIFICATIONS AND NOT LISTED HEREON, SHALL NOT APPLY.

NOTICE:- THIS DRAWING SHALL NOT BE USED OR REPRODUCED EITHER WHOLLY OR IN PART, EXCEPT WHEN AUTHORIZED IN CONNECTION WITH UNITED STATES GOVERNMENT PROCUREMENT.

ROCKET, HE, AT, 2.36 INCH M6A6. HEAD ASSEMBLY. LIST OF PARTS AND LIST OF SPECIFICATIONS.

HEAT TREATMENT & PROTECTIVE FINISH

PHYSICAL PROPERTIES

ORIGINAL DATE OF DRAWING APRIL 29, 1949

REVISIONS

NO.	DATE	NAME OF PERSON MAKING REVISION	BY	CHK
13	9-19-49			

CLASS	DIVISION	DRAWING
82	5	21A

DRAWING PERTAINS TO

DWG NO.	MAJOR ITEM	DWG NO.	MAJOR ITEM
82-5-21			

WEIGHT — DO NOT SCALE DRAWING — APPLY PART NO. (As Specified)

SCALE —

TOLERANCES OR DIMENSIONS (Unless Otherwise Specified)

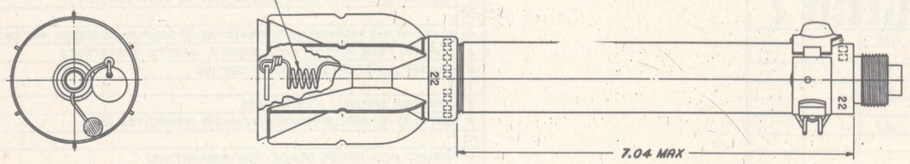
FROM FIN. SURFACES
DECIMAL ±
FRACTIONAL ±
ANGULAR ±
FROM UNFIN. SURFACES
FRACTIONAL ±
ANGULAR ±
SHARP CORNER AND EDGES BROKEN TO SAMPLE, ETC.

DRAWN J. C. H.
TRACED J. C. H.
CHECKED
ENGINEER
SUBMITTED
EXAMINED
APPROVED BY ORDER OF THE CHIEF OF ORDNANCE
CHIEF, 2ND DEPT J.S. ARMY

DWG SIZE D

ORDNANCE DEPT U.S. ARMY

COIL LONG IGNITION WIRE, BY MAKING APPROXIMATELY 5 TURNS ON A 3/16 INCH DIAMETER ROD, THEN INSERT COILS INSIDE OF CONE, AS SHOWN.

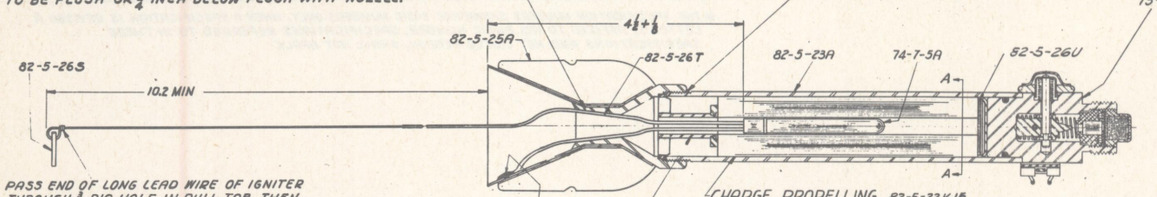


LINE NO.	LIST OF DRAWINGS	DRAWING NUMBER
1	ASSEMBLY	82-5-22
2	LIST OF PARTS AND LIST OF SPEC	82-5-22A
3	FUZE, ROCKET, BD, M401, ASSEMBLY	73-10-29
4	ELECTRIC IGNITER, MIZ, ASSEMBLY	74-7-5
5	MOTOR TUBE ASSEMBLY	82-5-23
6	FIN ASSEMBLY	82-5-25
7	DETAILS	82-5-26
8		
9		
10		

COAT OUTSIDE SURFACE OF NOZZLE CLOSURE, INCLUDING WIRE GROOVES THOROUGHLY WITH SYNTHETIC RUBBER ADHESIVE, TYPE I. PLACE IGNITER LEAD WIRES IN GROOVES OF NOZZLE CLOSURE AND ASSEMBLE CLOSURE IN NOZZLE BY APPLYING A LOAD OF 150 LBS MIN TO SEAT CLOSURE. CLOSURE TO BE FLUSH OR 1/4 INCH BELOW FLUSH WITH NOZZLE.

APPLY SYNTHETIC RUBBER ADHESIVE, TYPE I, 360° TO NOZZLE THREADS BEFORE ASSEMBLY TO TUBE AND ASSEMBLE SECURELY.

73-10-29A, FUZE, ROCKET, BD, M401, METAL PARTS ASSEMBLY, PIECE MARK 73-10-30A IS FURNISHED WITH MOTOR TUBE ASSEMBLY PIECE MARK 82-5-23A

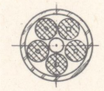


PASS END OF LONG LEAD WIRE OF IGNITER THROUGH 3/32 DIA HOLE IN PULL TAB, THEN TWIST END AROUND WIRE AT LEAST 3 TURNS, AS SHOWN. (SEE PARTIAL VIEW FOR METHOD OF SECURING TO INSIDE OF FIN ASSEMBLY).

SOLDER SHORT WIRE OF IGNITER, TO TINNED SPOT ON CONE SURFACE, WITH SOLDER, COMPOSITION Sn50. USE SOLDERING FLUX, PASTE.

CHARGE, PROPELLING 82-5-22K15
POWDER, PROPELLENT, M7
5 STICKS, EACH .365 TO .385 DIA, 4.6 MAX LONG (ADVISORY).
WEIGHT OF CHARGE 61.4±2.5 GRAMS.

ASSEMBLY 82-5-22A16



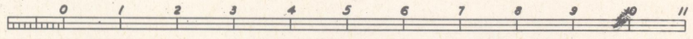
SECTION A-A

NOTICE:- THIS DRAWING SHALL NOT BE USED OR REPRODUCED EITHER WHOLLY OR IN PART, EXCEPT WHEN AUTHORIZED IN CONNECTION WITH UNITED STATES GOVERNMENT PROCUREMENT.

FOR ALTERNATIVE MATERIALS SEE DWG 82-5-22A.

NOTES:-
A-TOUCH UP EXTERIOR SURFACES, WHERE NECESSARY WITH OLIVE DRAB LACQUER ENAMEL, GRADE I OR II; OR OLIVE DRAB ENAMEL, GRADE I OR II.

SUPERSEDES 82-5-22 WITH CHANGE APRIL 29, 1949



ROCKET, HE, AT, 2.36 INCH, M6A6. MOTOR AND FUZE LOADING ASSEMBLY AND DETAILS.

HEAT TREATMENT & PROTECTIVE FINISH	CLASS	DIVISION	DRAWING
	82	5	22

DRAWING PERTAINS TO

PHYSICAL PROPERTIES	DWG. NO.	MAJOR ITEM	DWG. NO.	MAJOR ITEM
	82-6-3			

ORIGINAL DATE OF DRAWING JULY 15, 1942

REVISIONS

	NOTE	WAS SAW PTD NO.	BY	APP'D
14	4-29-49		JHP	RCA
15	9-19-49		JHP	RCA
16	8-29-50	ECO 16385	ZAH	RCA

WEIGHT — DO NOT SCALE DRAWING — APPLY PART NO. (As Specified)

SCALE —

TOLERANCES ON DIMENSIONS (Unless Otherwise Specified)

DRAFTSMAN J.a.H. DATE

CHECKED J.a.H. DATE

ENGINEER MJ for ENGINEER DATE

SUBMITTED DATE

EXAMINED DATE

APPROVED DATE

CAGE NO. D

ORDNANCE DEPT U.S. ARMY

1040

ORDNANCE DRAWING - SIZE D (ALTERNATIVE)

CL & DIV D

LIST OF PARTS

LINE NO.	NAME OF PART	NUMBER REQD PER COMPONENT	PIECE MARK	MATERIAL: SIZE OR FORM	MATERIAL: KIND	MATERIAL: GRADE	MATERIAL: SPEC NUMBER	APPROXIMATE UNIT WEIGHT (POUNDS)	APPROX GROSS WT OF RAW STOCK PER 1000 ASSEMBLIES	REMARKS
1	ASSEMBLY		82-5-22A					1.76		
2	ASSEMBLY, FIN	1	82-5-25A					.37		
3	ASSEMBLY, MOTOR TUBE	1	82-5-23A					1.21		
4	BODY, TRAP	1	82-5-26M	BAR	STEEL	FS1117	QQ-S-633			(d)
5	ASSEMBLY, FUZE, ROCKET, BD, M401	1	73-10-29A							(a)
6	ASSEMBLY, IGNITER, ELECTRIC, M12	1	74-7-5A					.02		
7	ASSEMBLY, TRAP	1	82-5-26L					.04		(g)
8	CUP, CLOSING, NOZZLE	1	82-5-26T	MOLDED	ETHYL CELLULOSE	TYPE III, GRB	AXS-1762			
9	CHARGE, PROPELLING	1	82-5-22K	STICK, 5 EACH	POWDER, PROPELLENT, M7		JAN-P-659	.134		
10	TAB, PULL	1	82-5-26S	SHEET	FIBER	HARD	HH-P-91			
11	RING, TRAP	1	82-5-26N	BAR	STEEL	FS1117	QQ-S-633			(d)(e)
12					ADHESIVE, SYNTHETIC RUBBER	TYPE I	62-4			
13					FLUX, SOLDERING; PASTE		O-F-506			
14					LACQUER ENAMEL, OLIVE DRAB	I OR II	JAN-L-73			(b)
15				SOLID WIRE	SOLDER	COMP Sh 50	QQ-S-571			
16	FILLER	(f)	82-5-26U		CHIPBOARD	TYPE II	50-11-86			

(a) FUZE, ROCKET, BD, M401, METAL PARTS ASSEMBLY, PIECE MARK 73-10-30A, IS FURNISHED WITH MOTOR TUBE ASSEMBLY, PIECE MARK 82-5-23A.
(b) ALTERNATIVE MATERIAL:-(C) ENAMEL, OLIVE DRAB, GRADE I OR II, SPEC JAN-E-74.
(c) ALTERNATIVE MATERIALS ARE INTENDED TO BE USED ONLY WHEN PRESCRIBED MATERIALS ARE NOT AVAILABLE.
(d) ALTERNATIVE MATERIAL:-(C) STEEL, FS 1115, FS 1118 OR FS 1137, AS-COLD-FINISHED, SPEC QQ-S-633.
(e) ALTERNATIVE MATERIAL:-(.) STEEL, STRIP, WD 1010 OR WD 1015, COLD ROLLED, TEMPER NO. 2, (HALF HARD) FINISH NO. 1 (DULL) SPEC. 57-136.
(f) USE ONE OR MORE AS REQUIRED TO PREVENT SHIFTING OF PROPELLENT.
(g) PROTECTIVE FINISH:- TYPE I, CLASS 1; SPEC 57-0-2.

LIST OF SPECIFICATIONS

LINE NO.	LIST OF SPECIFICATIONS	SPEC NUMBER *	REQUIRED BY
1	AMMUNITION, EXCEPT SMALL ARMS AMM, GENERAL SPEC FOR	50-0-1	DWG 82-5-22
2	ADHESIVE, SYNTHETIC RUBBER (HOT OR COLD BONDING)	62-4	DWG 82-5-22
3	PAPER, GENERAL SPEC AND METHODS OF TESTING	UU-P-31	50-11-86
4	ENAMEL, LUSTRELESS, QUICK-DRYING	JAN-E-74	DWG 82-5-22
5	FLUX, SOLDERING; PASTE	O-F-506	DWG 82-5-22
6	FIBER, HARD	HH-P-91	DWG. 82-5-26
7	FINISHES; PROTECTIVE, FOR IRON AND STEEL PARTS	57-0-2	DWG. 82-5-26
8	LACQUER ENAMEL, LUSTRELESS	JAN-L-73	DWG 82-5-22
9	CHIPBOARD, PLAIN, FOR AMMUNITION CONTAINERS	50-11-86	DWG 82-5-22
10	METALS; GENERAL SPECIFICATION FOR INSPECTION OF	QQ-M-151	QQ-S-571
11	PAINT, VARNISH, LACQUER AND RELATED MATERIALS; GEN SPEC. FOR	TT-P-141	JAN-L-73
12	PLASTIC, ETHYL CELLULOSE, MOLDED SHAPES AND EXTRUSIONS	AXS-1762	DWG 82-5-26
13	POWDER, PROPELLENT, M7	JAN-P-659	DWG 82-5-22
14	SOLDER; SOFT (TIN, TIN-LEAD, AND LEAD-SILVER)	QQ-S-571	DWG 82-5-22
15	COLOR CARD SUPPLEMENT	3-1	DWG 82-5-23
16			
17	STEEL; CARBON, BARS (GENERAL PURPOSE)	QQ-S-633	DWG 82-5-26
18	STEEL, CARBON AND ALLOY; SHEETS AND STRIPS	57-136	DWG 82-5-26
19			
20			

* THE SPECIFICATION NUMBERS SHOWN ARE BASIC NUMBERS ONLY. WHEN A SPECIFICATION IS REVISED A LETTER IS AFFIXED TO ITS BASIC NUMBER. SPECIFICATIONS REFERRED TO IN THESE SPECIFICATIONS AND NOT LISTED HEREON, SHALL NOT APPLY.

NOTICE:- THIS DRAWING SHALL NOT BE USED OR REPRODUCED EITHER WHOLLY OR IN PART, EXCEPT WHEN AUTHORIZED IN CONNECTION WITH UNITED STATES GOVERNMENT PROCUREMENT.

SUPERSEDES 82-5-22A WITH CHANGE APRIL 29, 1949

ROCKET, HE, AT, 2.36 INCH, M6A6. MOTOR AND FUZE LOADING ASSEMBLY. LIST OF PARTS AND LIST OF SPECIFICATIONS.

HEAT TREATMENT & PROTECTIVE FINISH

PHYSICAL PROPERTIES

ORIGINAL DATE OF DRAWING JULY 15, 1942

REVISIONS

12	4-29-49		
13	9-19-49	MP 007	
14	8-7-50	EC016263	MP 007

CLASS	DIVISION	DRAWING
82	5	22A

DRAWING PERTAINS TO: 82-5-22

WEIGHT — DO NOT SCALE DRAWING — APPLY PART NO.

SCALE

TOLERANCES ON DIMENSIONS

J. A. H. 007
J. A. H. 007
M J G R 11th

SUBMITTED
Col. Ord. Dept.

EXAMINED
Ordnance

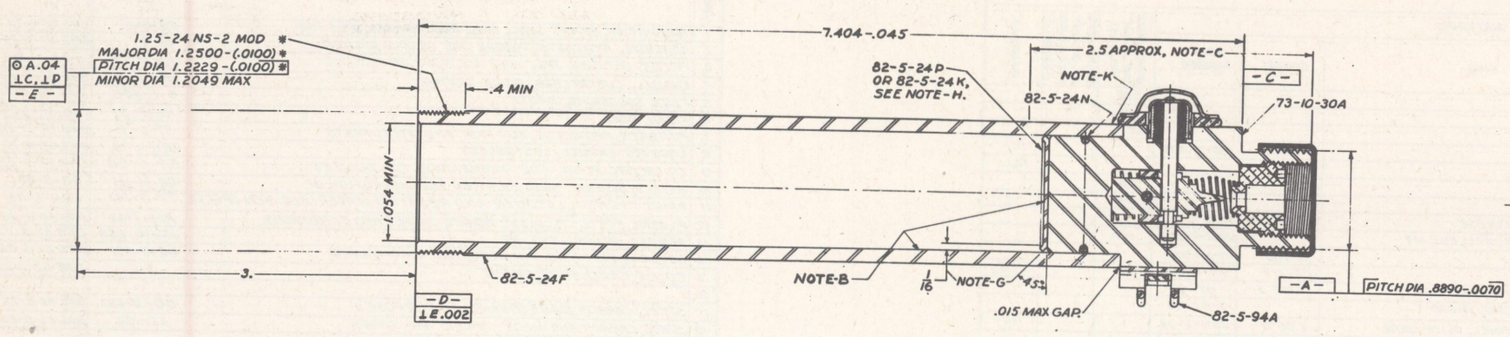
APPROVED
Col.

D

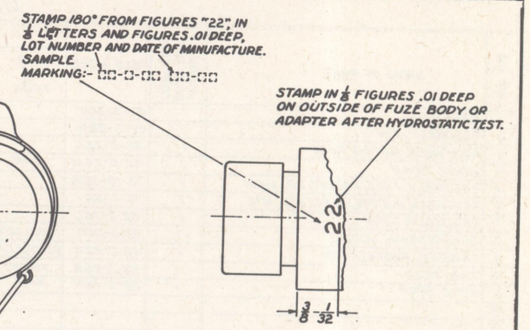
ORDNANCE DEPT U.S. ARMY

ORDNANCE DRAWING - SIZE D (ALTERNATIVE)

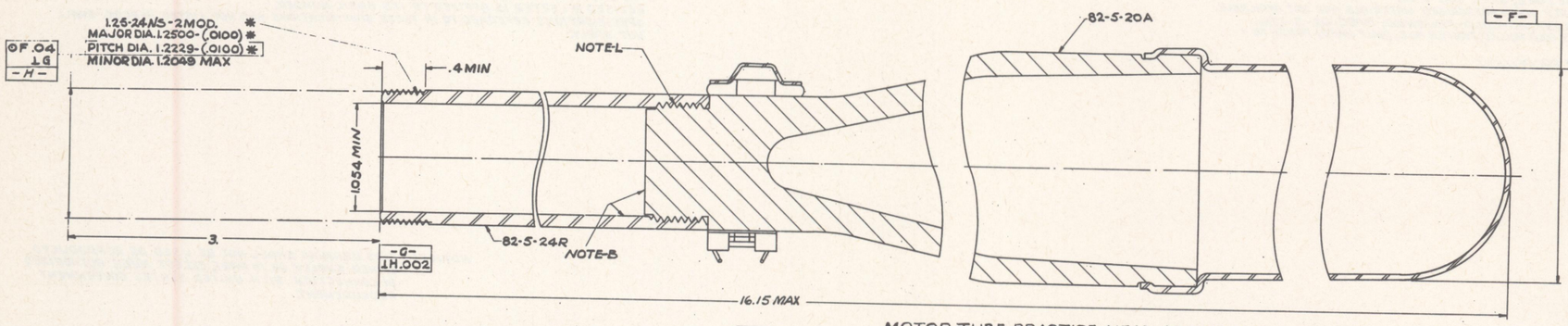
CL & DIV D



MOTOR TUBE ASSEMBLY 82-5-23 A 15

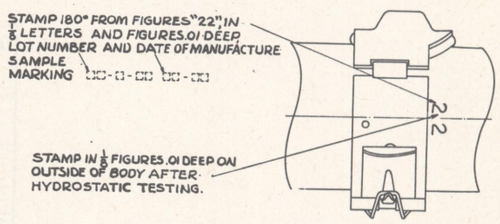


MARKING DIAGRAM



MOTOR TUBE PRACTICE HEAD ASSEMBLY 82-5-23 B 14

LINE NO.	LIST OF DRAWINGS	DRAWING NUMBER
1	MOTOR TUBE ASSEMBLIES	82-5-23
2	LIST OF PARTS AND LIST OF SPECIFICATIONS	82-5-23A
3	FUZE, ROCKET, BD, M401, METAL PARTS ASSY	73-10-30
4	SAFETY WIRE CLAMP ASSEMBLY & DETAILS	82-5-94
5	PRACTICE HEAD ASSEMBLY	82-5-20
6	DETAILS	82-5-24
7		
8	STANDARD FOR DIMENSIONING, ETC	30-1-7
9		



MARKING DIAGRAM

NOTES:-

A- ASSEMBLE FUZE BASE DISC 82-5-24P OR 82-5-24K AFTER HYDROSTATIC TESTING. SEAT DISC IN PLACE AS SHOWN BY APPLYING A LOAD NOT EXCEEDING 10000 LBS.

B- AFTER HYDROSTATIC TESTING AND ASSEMBLY OF FUZE BASE DISC, COAT INTERIOR SURFACE OF MOTOR TUBE ASSEMBLIES WITH ETHYL CELLULOSE LACQUER. DISC NOT REQUIRED IN MOTOR TUBE PRACTICE HEAD ASSEMBLY

C- APPLY PROTECTIVE FINISH TYPE I, CLASS TS, RS OR RSC, BEFORE ASSEMBLING FUZE PARTS TO DIMENSION SHOWN. (PROTECTIVE FINISH TO BE APPLIED TO INSIDE SURFACES OF FUZE BODY, ALSO.)

D- AFTER HYDROSTATIC TESTING COAT EXTERIOR SURFACES OF MOTOR TUBE ASSEMBLY 82-5-23 A WITH PRIMER, SYNTHETIC, LACQUER-RESISTING, TYPE I. AFTER DRYING, RECOAT WITH OLIVE DRAB LACQUER ENAMEL, GRADE I OR II OR OLIVE DRAB ENAMEL, GRADE I OR II.

E- THICKNESS OF PAINT ON THREADS MUST NOT EXCEED .0005 INCH.

F- ASSEMBLE FUZE PARTS AND SAFETY WIRE CLAMP ASSEMBLY AFTER PAINTING.

G- THESE DIMENSIONS APPLY TO TOOL MANUFACTURE.

H- BEFORE PRESSING INTO POSITION SHOWN, CONVEX SIDE OF DISC MUST FACE FUZE BODY. WHEN ALTERNATIVE FUZE BASE DISC, 82-5-24K, IS USED, DISC MUST BE BRAZED TO FUZE BODY.

K- SECURE BY BRAZING WITH SILVER SOLDER, CLASS 4. USE BRAZING FLUX.

L- COAT THREADS OF BODY WITH QUICK HARDENING THREAD COMPOUND AND ASSEMBLE BY APPLYING A TORQUE OF 300 INCH POUNDS MIN. (SEE NOTE "N").

M- AFTER HYDROSTATIC TESTING COAT EXTERIOR SURFACES OF PRACTICE MOTOR TUBE 82-5-24R WITH PRIMER SYNTHETIC, LACQUER-RESISTING TYPE I, THEN COAT ALL EXTERIOR SURFACES WITH OLIVE DRAB LACQUER ENAMEL, GRADE I OR II; OR OLIVE DRAB ENAMEL, GRADE I OR II (PAINT MAY OVERLAP ON HEAD 1/8 INCH).

N- ALLOW ASSEMBLIES TO DRY FOR APPROXIMATELY 6 HOURS BEFORE HYDROSTATIC TESTING. THREADS, THREAD UNDERCUT AND THREAD RELIEF MUST BE THOROUGHLY COATED WITH QUICK HARDENING THREAD COMPOUND. (OCCASIONAL CHECK WILL BE MADE BY SECTIONING.)

0 1 2 3 4 5 INCHES

NOTICE:- THIS DRAWING SHALL NOT BE USED OR REPRODUCED EITHER WHOLLY OR IN PART, EXCEPT WHEN AUTHORIZED IN CONNECTION WITH UNITED STATES GOVERNMENT PROCUREMENT.

ROCKETS. HE, AT, 2.36 INCH, M6A6, PRAC. AT. M7A7, AND SMOKE, WP, M10A4. MOTOR TUBE ASSEMBLIES.

CLASS	DIVISION	DRAWING
82	5	23

DRAWING PERTAINS TO
82-5-22
82-16-9

ORIGINAL DATE OF DRAWING JULY 15, 1942

REVISIONS

13	4-29-49	
14	9-19-49	
15	8-29-50	ECO 16385

WEIGHT
SCALE
TOLERANCES ON DIMENSIONS

DO NOT APPLY PART #
DO

SUBMITTED
CHARTERED
APPROVED

D

ORDNANCE DEPT U.S. ARMY

SUPERSEDES 82-5-23 WITH CHANGE APRIL 29, 1949

LIST OF PARTS

LINE NO.	NAME OF PART	NUMBER REQD PER COMPONENT	PIECE MARK	MATERIAL: SIZE OR FORM	MATERIAL: KIND	MATERIAL: GRADE	MATERIAL: SPEC NUMBER	APPROXIMATE UNIT WEIGHT (POUNDS)	APPROX GROSS WT OF RAW STOCK PER 1000 ASSEMBLIES	REMARKS
1	MOTOR TUBE ASSEMBLY		82-5-23A					1.21		
2	SAFETY WIRE CLAMP ASSEMBLY	1(h,i)	82-5-94A					.04		
3	FUZE, ROCKET, 80, M401, METAL PARTS ASSEMBLY	1 (i)	73-10-30A					.55		
4	MOTOR TUBE PRACTICE HEAD ASSEMBLY	(h)	82-5-23B					2.68		
5	DISC, FUZE BASE	1 (i)	82-5-24P	STRIP	STEEL, COLD-ROLLED	WD 1010	57-136	.07		(d)
6	DISC, FUZE BASE (ALTERNATIVE)	(i)	82-5-24K	STRIP	STEEL, COLD-ROLLED	WD 1010	57-136	.07		
7	PRACTICE HEAD ASSEMBLY	1 (h)	82-5-20A							
8	RING	1 (i)	82-5-24N	WIRE	SOLDER, SILVER	CLASS 4	QQ-S-561			(b)
9	TUBE, MOTOR, HE	1 (i)	82-5-24F	TUBING	STEEL TUBING, TYPE I, CLASS A	WDX 4130	57-180	.60		(f)
10	TUBE, MOTOR, PRACTICE	1 (h)	82-5-24R	TUBING	STEEL TUBING, TYPE I, CLASS A	WDX 4130	57-180	.57		(f)
11					FLUX, BRAZING		4-1121			
12					FLUX, SOLDERING; PASTE		O-F-506			(c)
13					LACQUER, ETHYL CELLULOSE	SPECIAL	3-198			
14					LACQUER ENAMEL, OLIVE DRAB	I OR II	JAN-L-73			(a)
15					PRIMER, SYNTHETIC, LACQUER-RESISTING	TYPE I	JAN-P-72			
16					THREAD COMPOUND, QUICK HARDENING		SPEC.			(g)

(a) ALTERNATIVE MATERIAL:-(e) ENAMEL, OLIVE DRAB, GRADE I OR II, SPEC JAN-E-74.
(b) ALTERNATIVE MATERIALS:-(e) COPPER, ELECTROLYTIC, COMMERCIAL OR BRASS, COMMERCIAL.
(c) TO BE USED WHEN BRAZING WITH COPPER OR BRASS.
(d) NOT REQUIRED WHEN DISC, FUZE BASE (ALTERNATIVE), 82-5-24K IS USED.
(e) ALTERNATIVE MATERIALS ARE INTENDED TO BE USED ONLY WHEN PRESCRIBED MATERIALS ARE NOT AVAILABLE.

(f) ALTERNATIVE MATERIAL:-(e) STEEL, TUBING, WD 8630, TYPE I, CLASS A, SPEC 57-180.
(g) MANUFACTURED BY SMOOTH-ON MANUFACTURING COMPANY, 51 HARRISON AVE, JERSEY CITY, N.J. OR APPROVED SUBSTANTIAL EQUAL.
(h) FOR USE ON PRACTICE ROCKET.
(i) FOR USE ON HE, AT AND SMOKE ROCKETS.

LIST OF SPECIFICATIONS

LINE NO.	LIST OF SPECIFICATIONS	SPEC NUMBER *	REQUIRED BY
1	AMMUNITION, EXCEPT SMALL ARMS AMMUNITION, GENERAL SPEC FOR	50-0-1	DWG 82-5-23
2	CLEANING AND PREPARATION OF FERROUS METAL SURFACES FOR ORGANIC PROTECTIVE COATINGS	JAN-C-490	DWG 82-5-23
3	ENAMEL, LUSTRELESS, QUICK-DRYING	JAN-E-74	DWG 82-5-23
4	FINISHES, PROTECTIVE, FOR IRON AND STEEL PARTS	57-0-2	DWG 82-5-23
5	FLUX, BRAZING (FOR SILVER SOLDER)	4-1121	DWG 82-5-23
6	FLUX, SOLDERING; PASTE	O-F-506	DWG 82-5-23
7			
8	LACQUER ENAMEL, LUSTRELESS	JAN-L-73	DWG 82-5-23
9	LACQUER, ETHYL CELLULOSE, SPECIAL (FOR ORDNANCE MATERIEL)	3-198	DWG 82-5-23
10	METALS; GENERAL SPECIFICATION FOR INSPECTION OF	QQ-M-151	57-136
11			
12	PAINTS AND RELATED MATERIALS, GENERAL SPECIFICATIONS FOR INSPECTION AND TESTS	3-1	JAN-L-73
13	PRIMER, SYNTHETIC, LACQUER-RESISTING	JAN-P-72	DWG 82-5-23
14			
15	SOLDER, SILVER	QQ-S-561	DWG 82-5-24
16	STEEL, CARBON AND ALLOY; SHEETS AND STRIPS	57-136	DWG 82-5-24
17			
18	TUBING, ROUND, MECHANICAL AND STRUCTURAL: STEEL, CARBON AND ALLOY, ETC.	57-180	DWG 82-5-24
19			
20			

* THE SPECIFICATION NUMBERS SHOWN ARE BASIC NUMBERS ONLY. WHEN A SPECIFICATION IS REVISED A LETTER IS AFFIXED TO ITS BASIC NUMBER. SPECIFICATIONS REFERRED TO IN THESE SPECIFICATIONS AND NOT LISTED HEREON, SHALL NOT APPLY.

NOTICE:- THIS DRAWING SHALL NOT BE USED OR REPRODUCED EITHER WHOLLY OR IN PART, EXCEPT WHEN AUTHORIZED IN CONNECTION WITH UNITED STATES GOVERNMENT PROCUREMENT.

SUPERSEDES 82-5-23A WITH CHANGE APRIL 29, 1949

ROCKETS, HE, AT, 2.36 INCH; M6A6, PRAC. AT. M7A7 AND SMOKE, WP, M10A4, MOTOR TUBE ASSEMBLIES. LIST OF PARTS AND LIST OF SPECIFICATIONS.

HEAT TREATMENT & PROTECTIVE FINISH

PHYSICAL PROPERTIES

TP		RES.	
YS		EL	
EL 2		ROCK.	

ORIGINAL DATE OF DRAWING JULY 28, 1945

REVISIONS

NO.	DATE	WAS SAF ECO NO.?	BY	CHK
4	4-29-49			
5	9-19-49			

CLASS	DIVISION	DRAWING
82	5	23A

DRAWING PERTAINS TO

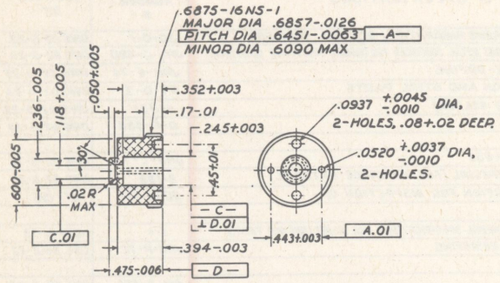
DRG NO.	MAJOR ITEM	DRG NO.	MAJOR ITEM
82-5-23			

WEIGHT —
SCALE —
TOLERANCES ON DIMENSIONS (Unless Otherwise Specified)
FRACTIONAL ±
ANGULAR ±
SHARP CORNERS AND EDGES BROKEN TO APPROX. .10

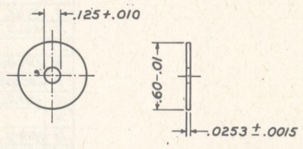
DO NOT APPLY PART NO. TO (As Specified)

DRAFTSMAN J. A. H. CHECKED
TRACED J. A. H. CHECKED
ENGINEER ENGINEER
SUBMITTED
CHIEF DIVISION, ORD DEPT U S ARMY
EXAMINED
CHIEF DIVISION, ORD DEPT U S ARMY
APPROVED BY AUTHORITY OF THE CHIEF OF ORDNANCE
CHIEF, ORD DEPT U S ARMY

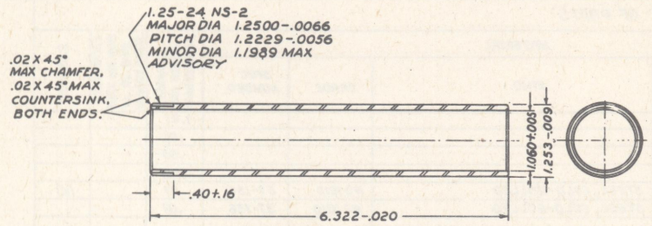
ORD SIZE D
ORDNANCE DEPT U S ARMY



a HOLDER, DETONATOR 82-5-24C18
ALUMINUM-ALLOY, ROD, CONDITION T
FINISH 125



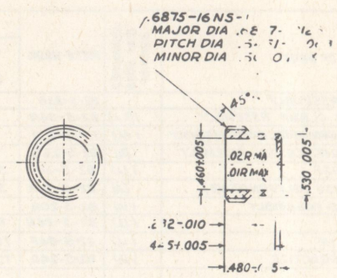
a DISC, DETONATOR HOLDER RETAINING 82-5-24E
ALUMINUM, SHEET, HALF HARD



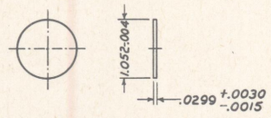
a TUBE, MOTOR, HE 82-5-24F17
STEEL, TUBING, WDX 4130, TYPE I, CLASS A

MIN PHYSICAL PROPERTIES
ADVISORY YIELD STRENGTH (SET=.1%) 145,000 PSI.
EL .... 6% IN 2 INCHES.

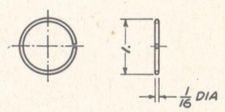
NOTES:
A - THE ABOVE MIN PHYSICAL PROPERTIES SHALL APPLY AFTER ASSEMBLY AND BRAZING SHOWN ON DRAWING 82-5-23.
B - ADVISORY DIMENSIONS BEFORE HEAT TREATMENT: - 1.253 -.009; 1.060+.005
C - ID OF TUBE, 1.060+.005 ADVISORY ONLY AFTER HEAT TREATMENT.
D - TUBE MUST MEET DIMENSIONS SHOWN ON ASSEMBLY, DWG 82-5-23 AFTER HYDROSTATIC TEST.
E - MUST MEET ECCENTRICITIES SHOWN ON ASSEMBLY DWG 82-5-23.



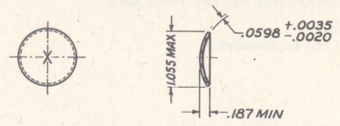
a CUP, BOOSTER 82-5-24[illegible]
ALUMINUM-ALLOY, [illegible], CONDITION T
FINISH 125



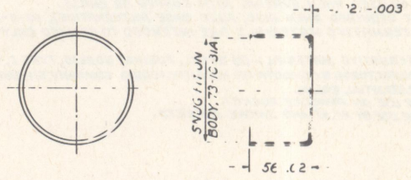
a DISC, FUZE BASE (ALTERNATIVE) 82-5-24K
STEEL, STRIP, WD1010, COLD-ROLLED,
TEMPER NO.2 (HALF-HARD), FINISH NO.1 (DULL)



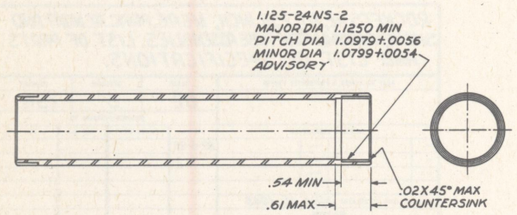
a RING 82-5-24N
SILVER SOLDER, CLASS 4
DIMENSIONS ADVISORY ONLY.



a DISC, FUZE BASE 82-5-24P
STEEL, STRIP, WD1010, COLD-ROLLED,
TEMPER NO.2 (HALF-HARD), FINISH NO.1 (DULL)
STAMP LETTER "X" 1/8 INCH HIGH BY .01 DEEP IN CENTER OF CONVEX SIDE.



a COVER 82-5-24G
BOXBOARD, SHEET



b TUBE, MOTOR, PRACTICE 82-5-24R
FOR ADDITIONAL INFORMATION, SEE TUBE, MOTOR, HE, 82-5-24F

a - FOR USE ON HE, AT AND SMOKE ROCKETS.
b - FOR USE ON PRACTICE ROCKET.
c - FOR ALTERNATIVE MATERIALS AND PROTECTIVE FINISHES, SEE DWGS 82-5-23A, 82-16-9, 73-10-29 AND 73-10-30A.

SUPERSEDES 82-5-24 WITH CHANGE APRIL 29, 1949

SCALE, INCHES, 1/1, 2/1

NOTICE:- THIS DRAWING SHALL NOT BE USED OR REPRODUCED EITHER WHOLLY OR IN PART, EXCEPT WHEN AUTHORIZED IN CONNECTION WITH UNITED STATES GOVERNMENT PROCUREMENT

ROCKETS, HE, AT, 2.36 INCH, M6A6, PRAC, AT, M7A7 AND SMOKE, WP, M10A4, METAL PARTS DETAIL.

82 5 24

82-5-23
82-16-9
73-10-29
73-10-30

JULY 15, 1942

16 4-29-49
17 9-19-49
1A 8-29-50 ECO 16385

D

AAF FORM 1080
11 OCT 45
37617

ARMY SERVICE FORCES
ORDNANCE DEPARTMENT
ORDNANCE DRAWING – SIZE D (ALTERNATIVE)

CL & DIV D

LIST OF PARTS

LINE NO.	NAME OF PART	NUMBER REQ'D PER COMPONENT	PIECE MARK	SIZE OR FORM	KIND	GRADE	SPEC NUMBER	APPROXIMATE UNIT WEIGHT (POUNDS)	APPROX GROSS WEIGHT OF RAW STOCK PER 1000 ASSEMBLIES	REMARKS
1	FIN ASSEMBLY		82-5-25A					.37		
2										
3	CONE	1	82-5-25G	STRIP	STEEL	WD1010	57-136			
4										
5	FIN	3	82-5-25E	STRIP	STEEL	WD1010	57-136			
6										
7	NOZZLE	1	82-5-25D	BAR	STEEL, ANNEALED	FSX4130	QQ-S-671			b
8										
9					FLUX, SOLDERING; PASTE		O-F-506			
10					LACQUER ENAMEL, OLIVE DRAB	I OR II	JAN-L-73			c, d
11										
12					PRIMER, SYNTHETIC, LACQUER-RESISTING	TYPE I	JAN-P-72			
13					SOLDER, TIN-LEAD	CLASS A	QQ-S-571			
14										

a – ALTERNATIVE MATERIALS ARE INTENDED TO BE USED ONLY WHEN PRESCRIBED MATERIALS ARE NOT AVAILABLE.
b – ALTERNATIVE MATERIAL:–(a.) STEEL, FS8630, ANNEALED, SPEC QQ-S-671.
c – ALTERNATIVE MATERIAL:–(a.) ENAMEL, OLIVE DRAB, GRADE I OR II, SPEC JAN-E-74.
d – ALTERNATIVE MATERIAL:–(a.) PROTECTIVE FINISH, TYPE I, CLASS TS, RS OR RSC, SPEC 57-0-2.

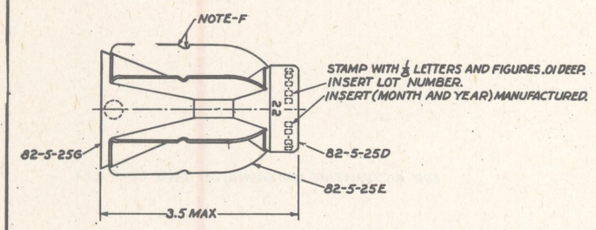
LIST OF DRAWINGS

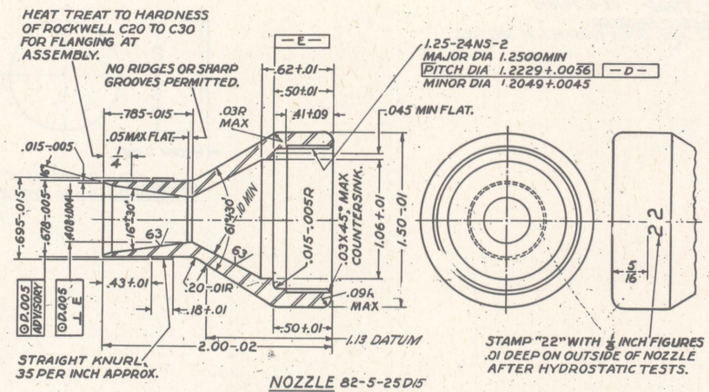
LINE NO.		DRAWING NUMBER
1	ASSEMBLY	82-5-25
2		
3		
4	STANDARD FOR DIMENSIONING, ETC	30-1-7
5		
6		

LIST OF SPECIFICATIONS

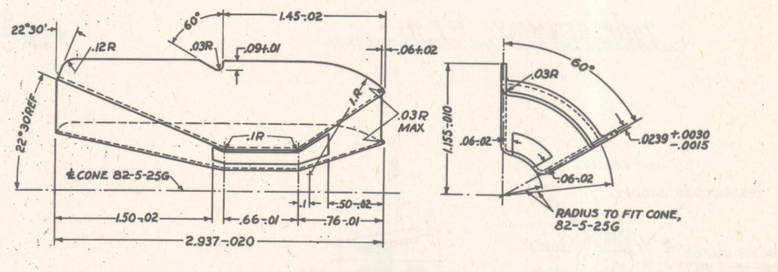
LINE NO.		SPEC NUMBER *	REQUIRED BY
1	AMMUNITION, EXCEPT SMALL ARMS AMMUNITION, GENERAL SPEC FOR	50-0-1	DWG 82-5-25
2			
3	CLEANING AND PREPARATION OF FERROUS METAL SURFACES, ETC	JAN-C-490	DWG 82-5-25
4	ENAMEL, LUSTRELESS, QUICK-DRYING	JAN-E-74	DWG 82-5-25
5			
6	FINISHES, PROTECTIVE, FOR IRON AND STEEL PARTS	57-0-2	DWG 82-5-25
7	FLUX, SOLDERING; PASTE	O-F-506	DWG 82-5-25
8			
9	LACQUER, ENAMEL, LUSTRELESS	JAN-L-73	DWG 82-5-25
10			
11	METALS, GENERAL SPECIFICATION FOR INSPECTION OF	QQ-M-151	57-136
12	PAINTS AND RELATED MATERIALS, GENERAL SPEC FOR INSP & TESTS	3-1	JAN-L-73
13	PRIMER, SYNTHETIC, LACQUER-RESISTING	JAN-P-72	DWG 82-5-25
14	ROCKET, HE, AT, 2.36 INCH, M6A6, PRAC, AT, M7A7 AND SMOKE, WP, M10A4	50-95-3	DWG 82-5-25
15	SOLDER; SOFT (TIN, TIN-LEAD, AND LEAD-SILVER)	QQ-S-571	DWG 82-5-25
16	STEEL; CARBON AND ALLOY, BARS	QQ-S-671	DWG 82-5-25
17	STEEL, CARBON AND ALLOY; SHEETS AND STRIPS	57-136	DWG 82-5-25
18			

* THE SPECIFICATION NUMBERS SHOWN ARE BASIC NUMBERS ONLY. WHEN A SPECIFICATION IS REVISED A LETTER IS AFFIXED TO ITS BASIC NUMBER. SPECIFICATIONS REFERRED TO IN THESE SPECIFICATIONS AND NOT LISTED HEREON, SHALL NOT APPLY.

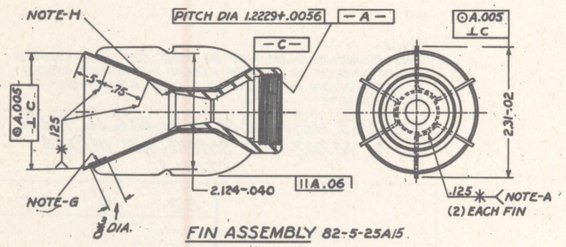




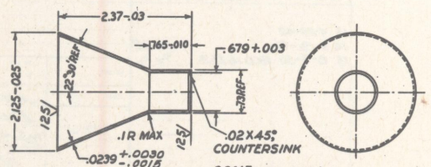
NOZZLE 82-5-25D15
STEEL, FSX4130, ANNEALED
HEAT TREAT TO WITHSTAND A 22,000 LBS PER SQUARE INCH HYDROSTATIC TEST HELD MOMENTARILY WITHOUT RUPTURE, STRIPPING OF THREADS OR DEFORMATION.
FINISH √ TO BE 250, OTHER SURFACES AS SPECIFIED.



FIN 82-5-25E
STEEL, STRIP, WD1010, COLD-ROLLED, TEMPER NO. 3 (QUARTER-HARD), FINISH NO. 1 (DULL)



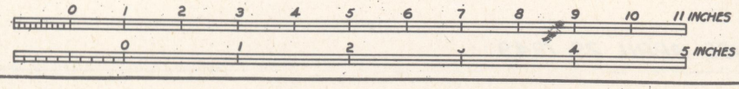
FIN ASSEMBLY 82-5-25A15



CONE 82-5-25G
STEEL, STRIP, WD1010, COLD-ROLLED, TEMPER NO. 5 (DEAD-SOFT) FINISH NO. 1 (DULL)

NOTICE:–THIS DRAWING SHALL NOT BE USED OR REPRODUCED EITHER WHOLLY OR IN PART, EXCEPT WHEN AUTHORIZED IN CONNECTION WITH UNITED STATES GOVERNMENT PROCUREMENT.

NOTES:
A – FOR WELDING SYMBOLS SEE JAN-STD-19, EACH WELD MUST PULL BUTTON WHEN TESTED TO DESTRUCTION. TEST ONE ASSEMBLY OUT OF EACH 100 FINS.
B – THE 1/8 INCH DIAMETER FOR TINNING ON SURFACE OF FIN IS APPROXIMATE AND MAY BE SQUARE OR IRREGULAR PROVIDING AREA IS APPROXIMATELY THE SAME.
C – CLEAN ALL SURFACES PRIOR TO PAINTING IN ACCORDANCE WITH, GRADE I, SPEC JAN-C-490.
D – COAT INTERIOR AND EXTERIOR SURFACES EXCEPT NOTCHES IN FINS AND TINNED SPOT WITH PRIMER, SYNTHETIC, LACQUER-RESISTING, TYPE I. AFTER DRYING, RECOAT WITH OLIVE-DRAB, LACQUER ENAMEL, GRADE I OR II OR OLIVE DRAB ENAMEL, GRADE I OR II.
ALTERNATIVE FINISH:–PROTECTIVE FINISH, TYPE I, CLASS TS, RS OR RSC, RESULTING IN OLIVE DRAB FINISH IN PLACE OF PAINTING.
E – THICKNESS OF PAINT ON THREADS MUST NOT EXCEED .0005 INCH.
F – THIS SURFACE MUST BE FREE FROM PAINT AND TINNED WITH TIN LEAD SOLDER, CLASS A. USE SOLDERING FLUX, PASTE. SOLDER MAY EXTEND OVER EDGES OF FINS. PAINT SHALL OVERLAP EDGES OF TINNED SURFACE.
G – THIS SURFACE MUST BE FREE FROM PAINT AND TINNED WITH TIN LEAD SOLDER, CLASS A. USE SOLDERING FLUX, PASTE. PAINT SHALL OVERLAP EDGES OF TINNED SURFACE.
H – CRIMP 360°, CRACKS 1/16 INCH DEEP PERMITTED.



REMOVE ALL BURRS.

SUPERSEDES 82-5-25 WITH CHANGE APR 29, 1949

ROCKETS, HE, AT, 2.36 IN., M6A6, PRAC, AT, M7A7 & SMOKE, WP, M10A4. FIN ASSEMBLY AND DETAILS.

HEAT TREATMENT & PROTECTIVE FINISH	CLASS	DIVISION	DRAWING
	82	5	25

PHYSICAL PROPERTIES: T.S. ____ RED. ____ E ____ E.L. 2 ____ ELONG. ____

DRAWING PERTAINS TO

DRG NO.	MAJOR ITEM	DRG NO.	MAJOR ITEM
82-5-22			
82-16-9			

ORIGINAL DATE OF DRAWING JULY 15, 1942

REVISIONS

NO.	DATE	REVISION (OR ADD'D NO.)	BY	CHK
14	4-29-49			
15	9-19-49		SEP	

WEIGHT — DO NOT SCALE — APPLY PART NO. (As Specified)

DRAFTSMAN Tyler — CHECKED Sept

TRACER Tyler — CHECK Sept

TOLERANCES ON DIMENSIONS (Unless Otherwise Specified): FRACTIONAL ±; ANGULAR ±; BREAK CORNERS AND EDGES .015 MAX.

LAYOUT — ENGINEER

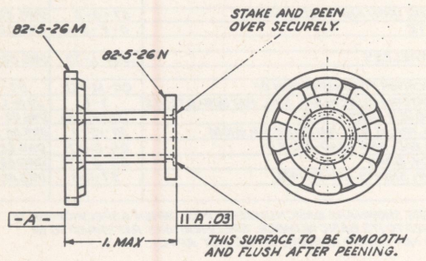
SUBMITTED A.F. Hopkins, 2ND LT., ORD. DEPT., U.S. ARMY

EXAMINED Chief, Design Engineering Section, ORD. DEPT., U.S. ARMY

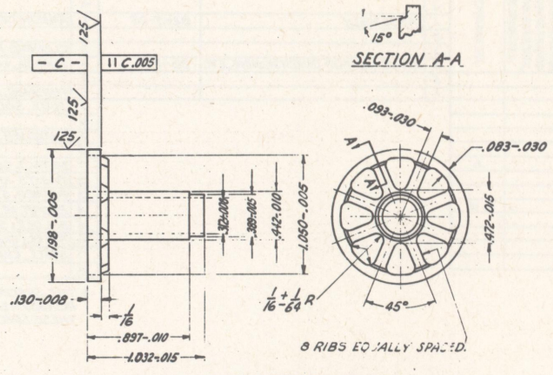
APPROVED BY ORDER OF THE CHIEF OF ORDNANCE: W. Barnes, COL., ORD. DEPT., U.S. ARMY

ENG. SIZE D

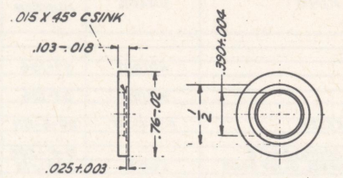
ORDNANCE DEPT U.S. ARMY



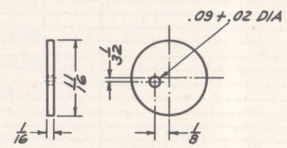
TRAP ASSEMBLY 82-5-26L14
ALTERNATIVE METHOD:- ONE PIECE CONSTRUCTION.



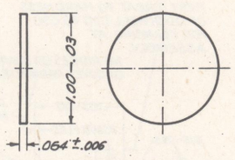
BODY, TRAP 82-5-26M15
STEEL, FS1117, AS-COLD-FINISHED
FINISH √ TO BE 250, OTHER SURFACES AS SPECIFIED.



RING, TRAP 82-5-26N15
STEEL, FS1117, AS-COLD-FINISHED
FINISH 125

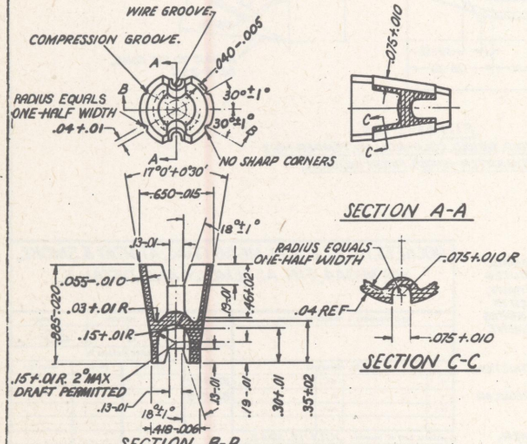


TAB, PULL 82-5-26S15
FIBER, HARD, SHEET



FILLER 82-5-26U15
CHIPBOARD, PLAIN, TYPE II

FOR ALTERNATIVE MATERIALS, SEE DWG 82-5-22A.



CUP, CLOSING, NOZZLE 82-5-26T15
MOLDED ETHYL CELLULOSE, TYPE III, GRADE B.
FORMERLY 82-5-22W

NOTICE:-
THIS DRAWING SHALL NOT BE USED OR REPRODUCED EITHER WHOLLY OR IN PART, EXCEPT WHEN AUTHORIZED IN CONNECTION WITH UNITED STATES GOVERNMENT PROCUREMENT.

ROCKETS, HE, AT, 2.36 INCH, M6A6, PRAC, AT, M7A7, AND SMOKE, WP, M10A4. DETAILS.

PLATE	SUBDIV	DRAWING
82	5	26

PHYSICAL PROPERTY: 82-5-22, 8216-9, 82-16-12

DATE FIRST DRAWN: JULY 15, 1942

13	4-29-49	
14	9-19-49	SHP
15	8-7-50	ECO16263

WEIGHT — DO NOT SCALE — APPLY PART NO.

SCALE —

"TOLERANCES ON DIMENSIONS ... UNLESS OTHERWISE SPECIFIED"

SUBMITTED: W. K. Hopkins

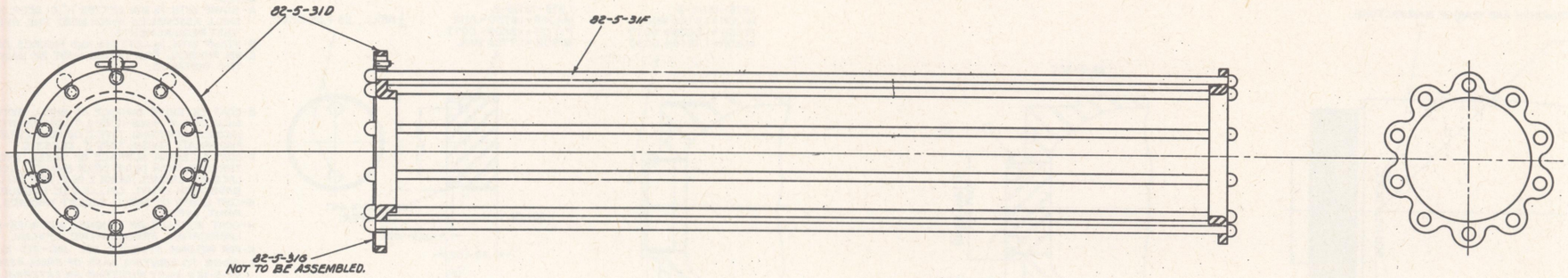
EXAMINED: [illegible] CHIEF DRAFTSMAN

APPROVED: J. P. Harris

D

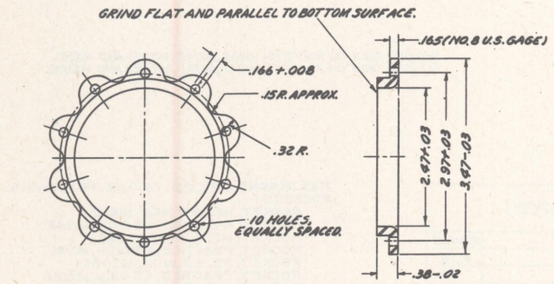
SUPERSEDES 82-5-26 WITH CHANGE APRIL 29, 1949

SCALE, INCHES, 2, 4



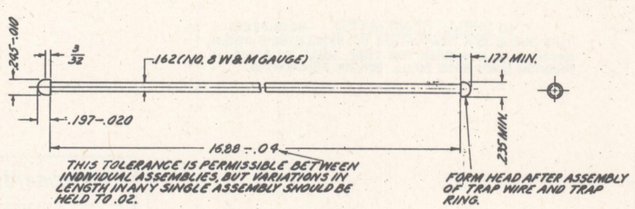
TRAP ASSEMBLY 82-5-31A11

PAINT ALL PARTS WITH ETHYL CELLULOSE LACQUER.



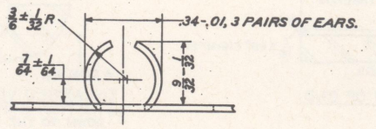
RING, TRAP 82-5-31B6

STEEL, WD1010 TO WD1020



WIRE, TRAP 82-5-31C11

WIRE, STEEL, BARE, FS1010 OR FS1020, HARD

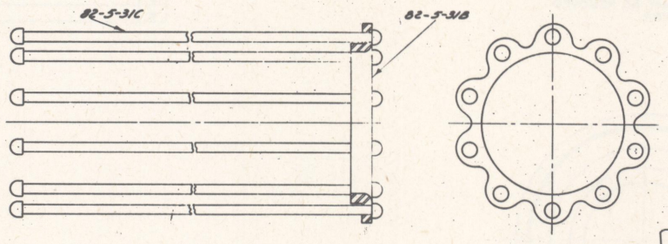


ENLARGED VIEW A-A

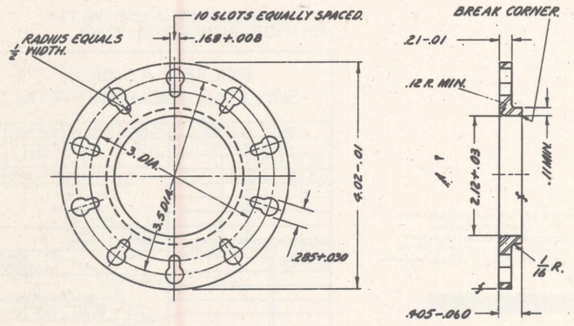
THIS DRAWING APPLIES TO THE FOLLOWING ROCKETS:-

ROCKET, HE, 4.5-INCH, 1.41 8A2
ROCKET, PRACTICE, 4.5-INCH, M17A2
ROCKET, HE, 4.5-INCH, M16A1
ROCKET, PRACTICE, 4.5-INCH, M17A1

ROCKET, HE, 4.5-INCH, M20E1
ROCKET, PRACTICE, 4.5-INCH, M21E1
ROCKET, HE, 4.5-INCH, M20E2
ROCKET, PRACTICE, 4.5-INCH, M21E2



CAGE, TRAP, ASSEMBLY 82-5-31F5



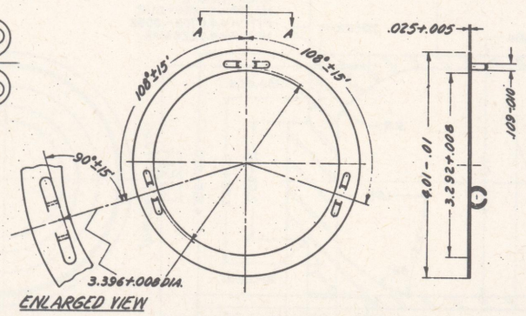
PLATE, TRAP 82-5-31D3

STEEL, WD1020 TO WD1030

HEAT TREAT - ROCKWELL C-25 MIN.

[redacted]

DEPT. OF ARMY, ORD. DEPT., PICATINNY ARSENAL
CLASSIFICATION CANCELLED
BY AUTHORITY OF THE CHIEF OF ORDNANCE
E. J. HEDSLEY, CAPT. O. D. SECURITY OFFICER
DATE 2-14-50 M. Thompson



ENLARGED VIEW

RETAINER, WIRE 82-5-31G10

STEEL, WD1010 TO WD1020

NO. 3 TEMPER, ROCKWELL B-65 MIN.

NOTE:-

3.396 AND 4.01 DIAMETERS MUST BE CONCENTRIC WITH 3.292 DIAMETER WITHIN .01 MEASURED RADIALLY.

SCALE, INCHES: 1/1

SUPERSEDES OLD TRACING 82-5-31 UNDER REVISION DATE OF MARCH 21, 1945.

ROCKET, 4.5-INCH, TRAP ASSEMBLY AND DETAILS.

JULY 4, 1942

REVISIONS				
8	6-15-44			
9	3-21-45			
10	8-15-45			
11	2-14-50			

CLASS	DIVISION	DRAWING	FILE
82	5	31	

TOLERANCE ON DIMENSIONS NOT OTHERWISE SPECIFIED
DECIMAL ±
FRACTIONAL ±
ANGULAR ±

D'FTSMAN	TRACER	ENGINEER
E.S.	E.S.	C.C.J.
CHECKER	C.C.	HEAD ENGINEER
E.J.S.		Symmes

DRG. PERTAINS TO
82-5-48

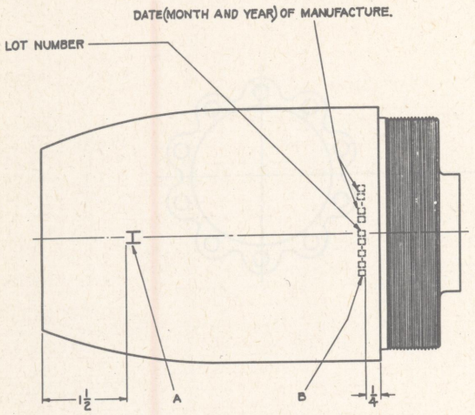
SUBMITTED:-
[signature]
LT. COL., ORD. DEPT. U.S.A.

EXAMINED:-
[signature]
LT. COL., ORD. DEPT. U.S.A.

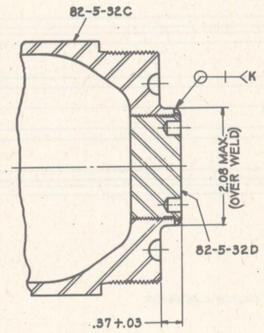
APPROVED BY ORDER OF THE CHIEF OF ORDNANCE:-
C. S. Reed 4.4.
COL., ORD. DEPT. U.S.A.

D

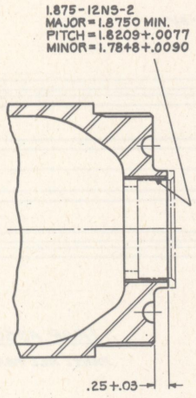
ORDNANCE DEPT., U.S.A.



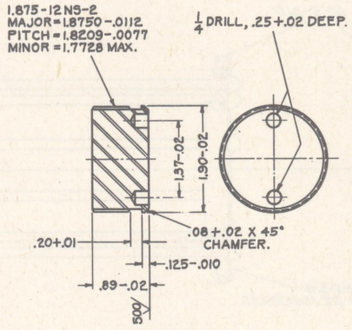
MARKING DIAGRAM



(d) SHELL ASSEMBLY 82-5-32A13



(d) SHELL, RENOVATED 82-5-32C13
THIS SHELL IS A RENOVATION OF SHELLS, 82-5-32B 11, HAVING A HOLE IN BASE FOR TUBE, SHELL, 82-5-32E 10. PHANTOM LINES SHOW SHELL BEFORE RENOVATING.

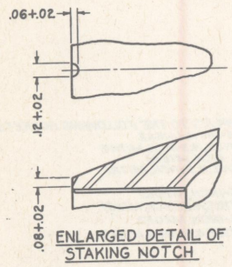


(d) PLUG 82-5-32D13
STEEL, FS1117 OR FS1022

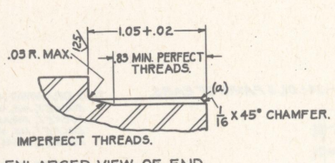
NOTES:-
A-STAMP WITH ¼ MIN. LETTER "H" .01 DEEP, WHERE INDICATED, ON ALL SHELL ASSEMBLIES WHICH MEET THE HYDROSTATIC PRESSURE TEST REQUIREMENTS.
B-STAMP WITH ⅛ LETTERS AND FIGURES .01 DEEP, WHERE INDICATED.
C-MIN. PHYSICAL PROPERTIES MUST BE MAINTAINED FOR AT LEAST THIS DISTANCE.

E-COAT EXTERIOR SURFACE OF SHELL BETWEEN FRONT END AND SHOULDER AT 4.125-12NS-2 THREADS WITH PRIMER, SYNTHETIC, LACQUER-RESISTING, TYPE I, OR COAT ENTIRE SURFACE WITH PROTECTIVE PHOSPHATE FINISH, TYPE II, CLASS C.
F-COAT EXTERIOR SURFACE OF SHELL, EXCEPT SHELL BASE AND THREADS, WITH OLIVE DRAB ENAMEL, GRADE I OR II OR OLIVE DRAB LACQUER ENAMEL, GRADE I OR II, COAT EXTERIOR SURFACE OF SHELL BASE WITH ETHYL CELLULOSE LACQUER.
G-COAT CAVITY OF SHELL, EXCEPT THREADS, WITH ACID-PROOF BLACK PAINT, TYPE I.
H-COAT SURFACE OF 3.-16NS-1 AND 4.125-12NS-2 THREADS WITH OIL, LUBRICATING, PRESERVATIVE, SPECIAL.
K-FOR WELDING SYMBOLS, SEE JAN-STD-19.
L-PRIOR TO PAINTING, BASE OF SHELL ASSEMBLY 82-5-32A AND SHELL 82-5-32B MUST WITHSTAND AN EXTERNAL HYDROSTATIC PRESSURE OF 8500 PSI WITHOUT LEAKAGE OR DEFORMATION.

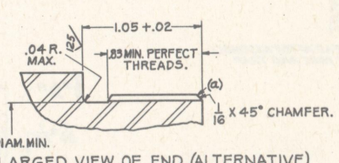
(b) USED ONLY ON ROCKETS, M16A2, M17A2, M20E1 AND M21E1.
(d) USED ONLY ON ROCKETS, M16A1, M17A1, M20E2 AND M21E2.



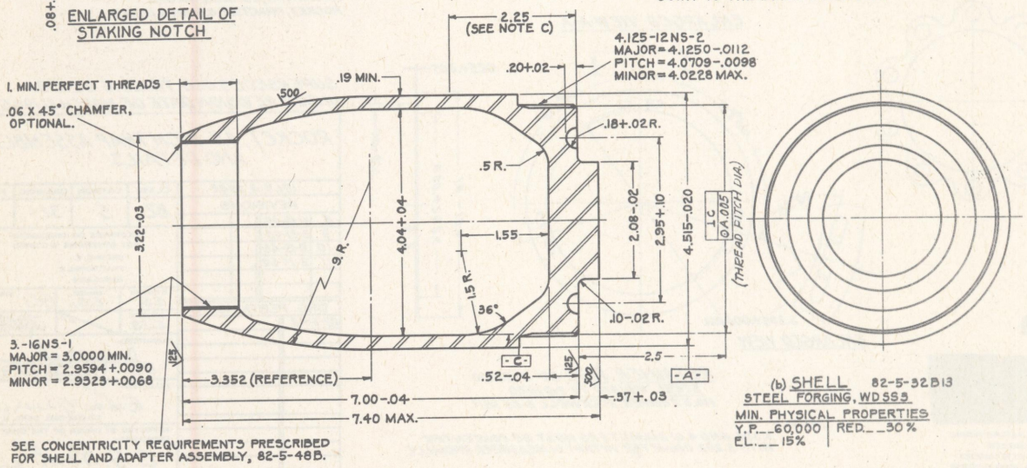
ENLARGED DETAIL OF STAKING NOTCH



ENLARGED VIEW OF END



ENLARGED VIEW OF END (ALTERNATIVE)
(a) THE FIRST PARTIAL THREAD MAY BE REMOVED DOWN TO THE MINOR DIAMETER.



(b) SHELL 82-5-32B13
STEEL FORGING, WD 595
MIN. PHYSICAL PROPERTIES
Y.P. 60,000 | RED. 30%
EL. 15%

UNIT NO.	WEIGHTS (ESTIMATED)	
	PART	POUNDS
1	SHELL ASSEMBLY	8.76
2	PLUG	.63
3	SHELL	8.90
4	SHELL, RENOVATED	8.13
5		
6		

THIS DRAWING APPLIES TO THE FOLLOWING ROCKETS:-
ROCKET, HE, 4.5 INCH, M16A2.
ROCKET, PRACTICE, 4.5 INCH, M17A2
ROCKET, HE, 4.5 INCH, M16A1
ROCKET, PRACTICE, 4.5 INCH, M17A1.
ROCKET, HE, 4.5 INCH, M20E1.
ROCKET, PRACTICE, 4.5 INCH, M21E1.
ROCKET, HE, 4.5 INCH, M20E2.
ROCKET, PRACTICE, 4.5 INCH, M21E2.

FOR ALTERNATIVE MATERIALS AND PROTECTIVE FINISHES SEE DRG. 82-5-32A.

SUPERSEDES 82-5-32 WITH CHANGE AUGUST 15, 1945.

DEPT. OF ARMY, ORD. DEPT., PICATINNY ARSENAL
CLASSIFICATION CANCELLED
BY AUTHORITY OF THE CHIEF OF ORDNANCE
E. J. NESSLEY, CAPT., O. D., SECURITY OFFICER
DATE: 2-14-50 M. Thompson

[redacted]

SCALE, INCHES, 1/1, 2/1

ROCKET, 4.5 INCH, SHELL ASSEMBLY AND DETAILS.

JULY 4, 1942	CLASS	DIVISION	DRAWING	FILE
REVISIONS	82	5	32	
12 8-15-45				
13 2-14-50				

TOLERANCE ON DIMENSIONS NOT OTHERWISE SPECIFIED
DECIMAL ±
FRACTIONAL ±
ANGULAR ±

DRAFTSMAN	TRACER	ENGINEER
NWF	NWF	
CHECKER		HEAD ENGINEER

DRG. PERTAINS TO
82-5-48

SUBMITTED:
Lt.-Col., ORD. DEPT. U.S.A.

EXAMINED:
ORD. DEPT. U.S.A.

APPROVED BY ORDER OF THE CHIEF OF ORDNANCE:
ORD. DEPT. U.S.A.

D

ORDNANCE DEPT., U.S.A.

LIST OF PARTS

LINE NUMBER	NAME OF PART	NUMBER REQD PER COMPONENT	PIECE-MARK	MATERIAL: SIZE OR FORM	MATERIAL: KIND	MATERIAL: GRADE	MATERIAL: SPEC. NUMBER	APPROX. UNIT WEIGHT (POUNDS)	APPROX GROSS WT. OF RAW STOCK PER 100 ASSEMBLIES	REMARKS
1	SHELL ASSEMBLY		82-5-32A				AXS-1423	8.76		L
2										
3										
4										
5										
6	PLUG	1	82-5-32D	BAR	STEEL	FS1113 OR FS1088	QQ-S-633	.63		D
7	SHELL	1	82-5-32B	FORGING	STEEL	WD553	57-104-1	8.90		BC
8	SHELL, RENOVATED	1	82-5-32C	FORGING	STEEL	WD553	57-104-1	8.13		BD
9										
10										
11					OIL, LUBRICATING, PRESERVATIVE	SPECIAL	2-120			
12										
13										
14										
15					LACQUER ENAMEL, OLIVE DRAB	TYPE I OR II	JAN-L-73			E
16										
17					LACQUER ETHYL CELLULOSE	SPECIAL	3-198			
18										
19					PAINT, ACID-PROOF BLACK	TYPE I	JAN-P-450			
20										
21					PRIMER, SYNTHETIC, LACQUER-RESISTING	TYPE I	JAN-P-72			A
22										
23										
24										
25										

LIST OF SPECIFICATIONS

LINE NO.	LIST OF SPECIFICATIONS	SPEC. NUMBER *	REQUIRED BY
1	AMMUNITION, EXCEPT SMALL ARMS AMMUNITION, GENERAL SPEC. FOR	50-0-1	DRG. 82-5-32
2	OIL, LUBRICATING, PRESERVATIVE, SPECIAL	2-120	DRG. 82-5-32
3	ENAMEL, LUSTRELESS, QUICK-DRYING	JAN-E-74	DRG. 82-5-32
4	LACQUER, ETHYL CELLULOSE, SPECIAL (FOR ORDNANCE MATERIAL)	3-198	DRG. 82-5-32
5	LACQUER ENAMEL, LUSTRELESS	JAN-L-73	DRG. 82-5-32
6	METALS, GENERAL SPECIFICATION FOR INSPECTION OF	QQ-M-151	QQ-S-633
7	PAINT, ACID-PROOF BLACK, FOR AMMUNITION	JAN-P-450	DRG. 82-5-32
8	PAINT, VARNISH, LACQUER AND RELATED MATERIALS, ETC	TT-P-141	JAN-E-74
9			
10	PRIMER, SYNTHETIC, LACQUER-RESISTING	JAN-P-72	DRG. 82-5-32
11			
12	WELDING SYMBOLS	JAN-STD-19	DRG 82-5-32
13	PACKING AND MARKING FOR DOMESTIC SHIPMENT OF INERT AMMUNITION, ETC	MIL-P-10025	DRG. 82-5-32
14	STEEL, CARBON & ALLOY; BLOOMS, BILLETS ETC. FOR FORGING (a)	AXS-907	DRG. 82-5-32
15	STEEL, FORGING, FOR SHELL STOCK (a)	57-104-1	DRG. 82-5-32
16	STEEL, CARBON; BARS (GENERAL PURPOSE)	QQ-S-633	DRG. 82-5-32
17	FINISHES, PROTECTIVE, FOR IRON AND STEEL PARTS	57-0-2	DRG. 82-5-32
18	SHELL ASSEMBLY, ROCKET, HE, 4.5-INCH AND PRACTICE, 4.5-INCH; METAL PARTS FOR	AXS-1423	DRG. 82-5-32
19	SURFACE ROUGHNESS WAVINESS AND LAY	MIL-STD-10	DRG 82-5-32
20	ORDNANCE FINISHES (SURFACE ROUGHNESS)	ORAX-6	50-0-1

* THE SPECIFICATION NUMBERS SHOWN ARE BASIC NUMBERS ONLY. WHEN A SPECIFICATION IS REVISED A LETTER IS AFFIXED TO ITS BASIC NUMBER. SPECIFICATIONS REFERRED TO IN THESE SPECIFICATIONS AND NOT LISTED HEREON, SHALL NOT APPLY.

(a) MACROSTRUCTURE TEST NOT REQUIRED.

A- ALTERNATIVE MATERIAL:-PROTECTIVE FINISH:- TYPE II, CLASS C, SPEC. 57-0-2
B- ALTERNATIVE MATERIAL :- STEEL, WD X 1335, SPEC. AXS-907.
C- USED ONLY ON ROCKETS, M16A2, M17A2, M26E1 AND M21E1.
D- USED ONLY ON ROCKETS, M16A1, M17A1, M26E2 AND M21E2.
E- ALTERNATIVE MATERIAL :- ENAMEL, OLIVE DRAB, GRADE I OR II, SPEC JAN-E-74

THIS DRAWING APPLIES TO THE FOLLOWING ROCKETS:-
ROCKET, HE, 4.5 INCH, M16A2.
ROCKET, PRACTICE, 4.5 INCH, M17A2
ROCKET, HE, 4.5 INCH, M16A1.
ROCKET, PRACTICE, 4.5 INCH, M17A1.
ROCKET, HE, 4.5 INCH, M26E1.
ROCKET, PRACTICE, 4.5 INCH, M21E1.
ROCKET, HE, 4.5 INCH, M26E2.
ROCKET, PRACTICE, 4.5 INCH, M21E2.

DEPT. OF ARMY, ORD. DEPT., PICATINNY ARSENAL
CLASSIFICATION CANCELLED
BY AUTHORITY OF THE CHIEF OF ORDNANCE
E. J. NESSLEY, CAPT. O. D. SECURITY OFFICER
DATE 2-14-50 M. Thompson

[redacted]

ROCKET, 4.5-INCH, HE AND PRACTICE LIST OF PARTS AND SPECIFICATIONS FOR SHELL ASSEMBLY

OCTOBER 2, 1944

CLASS	DIVISION	DRAWING	FILE
82	5	32A	

REVISIONS
1 3-15-45
2 8-13-45
3 2-14-50

TOLERANCE ON DIMENSIONS NOT OTHERWISE SPECIFIED
DECIMAL ±
FRACTIONAL ±
ANGULAR ±

D'FTSMAN FG | TRACED J.D.D. | ENGINEER
CHECKED E.E.J. | ENGINEER E.E.J.

DRG. PERTAINS TO 82-5-32

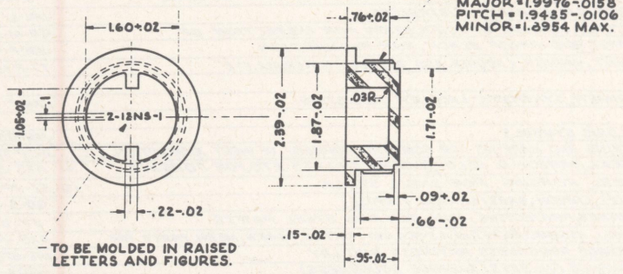
SUBMITTED:- A. W. Bruttley, ENG ORD. DEPT. U. S. A.

EXAMINED:- H. J. Jones Jr, SENIOR ORD. DEPT., U. S. A.

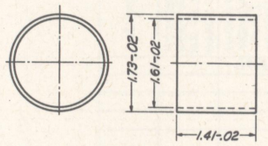
APPROVED BY ORDER OF THE CHIEF OF ORDNANCE:- G. W. Trichel, COL. ORD. DEPT., U. S. A.

D

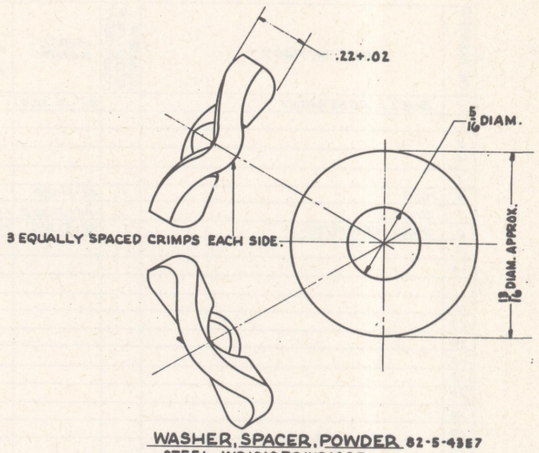
ORDNANCE DEPT., U. S. A.



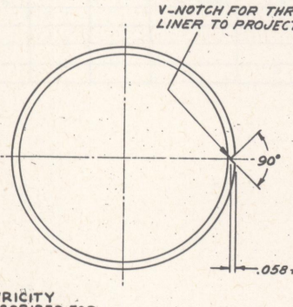
PLUG, CLOSING 82-5-43F7
MOLDED PHENOLIC MATERIAL, CLASS 1

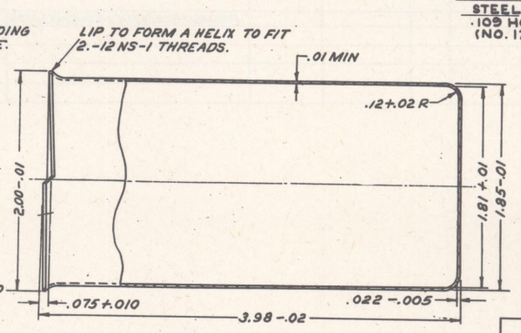


SPACER 82-5-43L7
BOXBOARD
CONVOLUTE OR SPIRAL WOUND AND SECURED WITH GLUE, GRADE II, BETWEEN LAYERS.

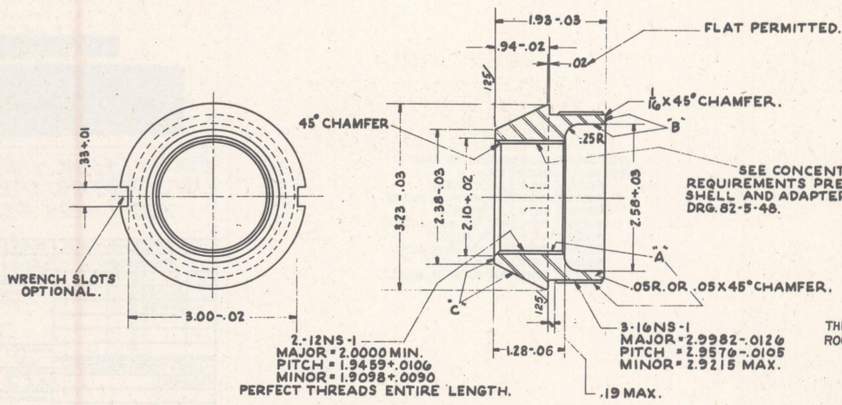


WASHER, SPACER, POWDER 82-5-43E7
STEEL, WD1010 TO WD1025
.109 HOT ROLLED SHEET
(NO. 12 B.W. GAGE)





LINER 82-5-43K7
ALUMINUM SHEET, CONDITION A



ADAPTER, FUZE 82-5-43C7
STEEL, FS1H7 OR FS1022-
[redacted]
"A"- COAT WITH OIL, LUBRICATING, PRESERVATIVE, SPECIAL.
"B"- COAT WITH ACID-PROOF BLACK PAINT, TYPE I.
"C"- CLEAN AND COAT WITH OLIVE-DRAB LACQUER ENAMEL, GRADE I OR II, OR OLIVE DRAB ENAMEL, GRADE I OR II.
"D"- FOR CONCENTRICITY REQUIREMENTS SEE DRG. 82-5-48.

THIS DRAWING APPLIES TO THE FOLLOWING ROCKETS:-
ROCKET, HE, 4.5-INCH, M16A2.
ROCKET, HE, 4.5-INCH, M16A1.
ROCKET, PRACTICE, 4.5-INCH, M17A2.
ROCKET, PRACTICE, 4.5-INCH, M17A1.
ROCKET, HE, 4.5-INCH, M20E1.
ROCKET, HE, 4.5-INCH, M20E2.
ROCKET, PRACTICE, 4.5-INCH, M21E1.
ROCKET, PRACTICE, 4.5-INCH, M21E2.

DEPT. OF ARMY, ORD. DEPT., PICATINNY ARSENAL
CLASSIFICATION CANCELLED
BY AUTHORITY OF THE CHIEF OF ORDNANCE
E. J. HESSLEY, CAPT. O. D. SECURITY OFFICER
DATE 2-14-50 M. Thompson

SCALE 1/2 1/4 1/1

ROCKET, 4.5-INCH. FUZE, ADAPTER AND MISCELLANEOUS DETAILS.

JULY 26, 1944

CLASS	DIVISION	DRAWING	FILE
82	5	43	

REVISIONS

1	9-6-44	7	2-14-50
2	10-2-44		
3	10-21-44		
4	11-7-44		
5	3-15-45		
6	8-15-45		

DRG. PERTAINS TO

82-5-48
82-16-13
82-16-16

TOLERANCE ON DIMENSIONS NOT OTHERWISE SPECIFIED
DECIMAL ±
FRACTIONAL ± 1/64
ANGULAR ± 2°

D'FTSMAN T.C. | TRACER | ENGINEER
CHECKER | E.C. | ENGR. LIB.

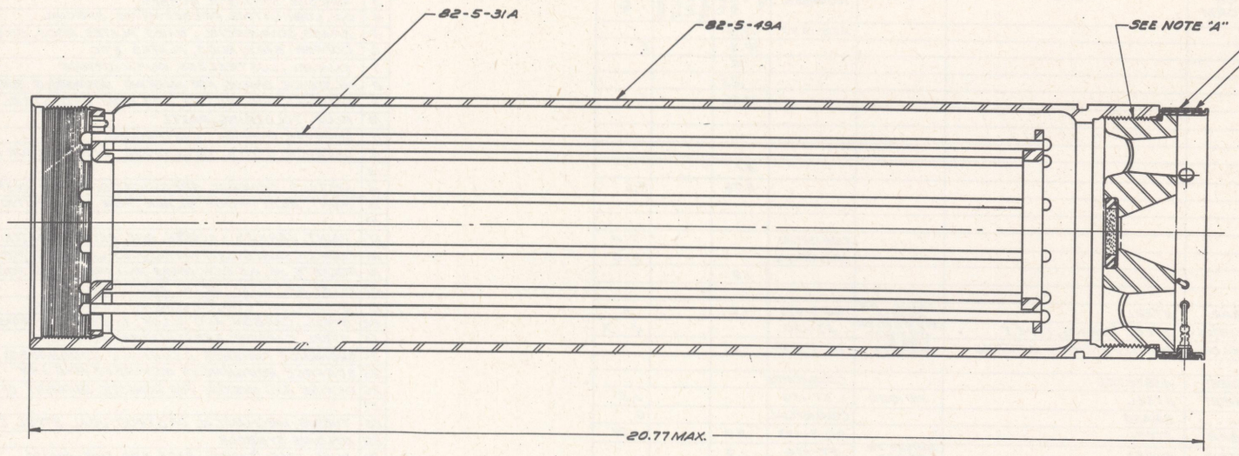
SUBMITTED:
G. W. Beatty
ENGR. ORD. DEPT., U. S. A.

EXAMINED:
H. T. Jones Jr.
MAJOR ORD. DEPT., U. S. A.

APPROVED BY ORDER OF THE CHIEF OF ORDNANCE:
L. A. Beaty
LT. COL. ORD. DEPT., U. S. A.

D

ORDNANCE DEPT. U. S. A.



BODY, NOZZLE AND TRAP ASSEMBLY 82-5-48A4

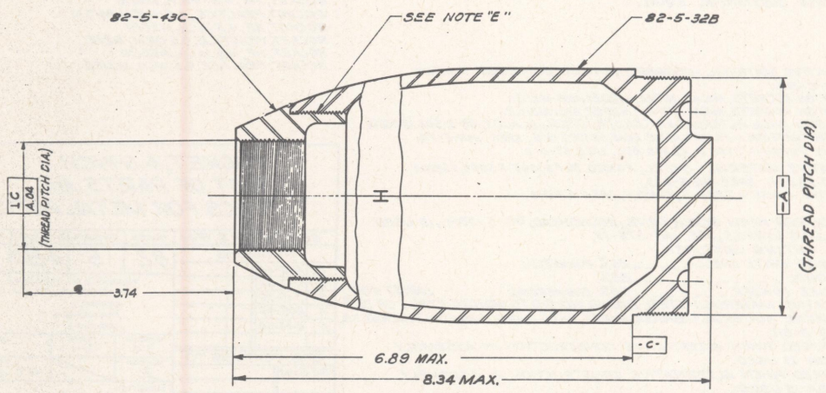
NOTES:
A - COAT THREADS OF BODY OR NOZZLE WITH THREAD LUTING MIXTURE.

D - ASSEMBLY OF BODY AND CONTACT RING MUST PASS THRU A GAGE 4.5332-.0006 DIA. BY 21 MIN. LONG.

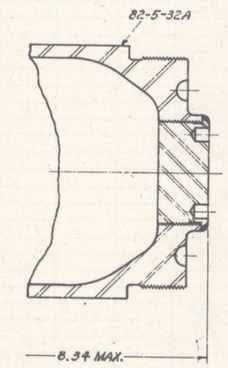
E - SECURE ADAPTER TO SHELL BY APPLYING PETTMAN CEMENT TO ADAPTER THREADS AND ASSEMBLE, THEN STAKE ADAPTER TO SHELL BEFORE CEMENT SETS.

LINE NO.	LIST OF DRAWINGS	DRAWING NUMBER
1	METAL PARTS ASSEMBLIES	82-5-48
2	LIST OF PARTS AND SPECS.	82-5-48A
3	TRAP ASSEMBLY AND DETAILS	82-5-31
4	SHELL ASSEMBLY AND DETAILS	82-5-32
5	FUZE ADAPTER AND MISC. DETAILS	82-5-49
6	BODY DETAILS	82-5-49
7	NOZZLE PLATE ASS'Y. & DETAILS	82-5-50
8	CONTACT RING ASS'Y. & DETAILS	82-5-67
9	STD FOR DIMENSIONING & TOLERANCING	30-1-7

THIS DRAWING APPLIES TO THE FOLLOWING ROCKETS:-
ROCKET, HE, 4.5-INCH, M16A2
ROCKET, PRACTICE, 4.5-INCH, M17A2
ROCKET, HE, 4.5-INCH, M16A1
ROCKET, PRACTICE, 4.5-INCH, M17A1.
ROCKET, HE, 4.5 INCH, M20E1
ROCKET, PRACTICE, 4.5 INCH, M21E1
ROCKET, HE, 4.5 INCH, M20E2
ROCKET, PRACTICE, 4.5 INCH, M21E2.



(a) SHELL AND ADAPTER ASSEMBLY 82-5-48B4



(b) SHELL AND ADAPTER ASSEMBLY 82-5-48C3
FOR OTHER INFORMATION SEE 82-5-48B

(a) USED ONLY ON ROCKETS, M16A2 M17A2 M20E1 AND M21E1.
(b) USED ONLY ON ROCKETS, M16A1 M17A1, M20E2 AND M21E2.

[redacted]

DEPT. OF ARMY, ORD. DEPT., PICATINNY ARSENAL
CLASSIFICATION CANCELLED
BY AUTHORITY OF THE CHIEF OF ORDNANCE
E. J. NESSLEY, CAPT. O. D., SECURITY OFFICER
DATE 2-14-50

SUPERSEDES OLD TRACING 82-5-48 UNDER REVISION DATE OF OCTOBER 2, 1944.

0 1 2 3 4 5 6 7 8 9 10 11 INCHES

ROCKET, 4.5-INCH, METAL PARTS ASSEMBLIES.

SEPTEMBER 6, 1944 | CLASS 82 | DIVISION 5 | DRAWING 48 | FILE

REVISIONS
1 10-2-44
2 [illegible]-45
3 8-15-45
4 2-14-50

TOLERANCE ON DIMENSIONS NOT OTHERWISE SPECIFIED
DECIMAL ±
FRACTIONAL ±
ANGULAR ±

DRG. PERTAINS TO
82-16-12
82-16-13
82-16-16
82-16-20
82-16-21

D'TSMAN J. A. G. | TRACER Bgm. | ENGINEER
CHECKER Ecd | G.C. | E.E.

SUBMITTED: [signature] LT. COL. ORD. DEPT. U.S.A.

EXAMINED: H. E. Jones MAJOR ORD. DEPT. U.S.A.

APPROVED BY ORDER OF THE CHIEF OF ORDNANCE: C. S. Reed for COL. ORD. DEPT. U.S.A.

D

ORDNANCE DEPT. U.S.A.

LIST OF PARTS

LINE NO.	NAME OF PART	NUMBER REQ'D PER COMPLT	PIECE MARK	MATERIAL: SIZE OR FORM	MATERIAL: KIND	MATERIAL: GRADE	MATERIAL: SPEC. NUMBER	APPROX. UNIT WEIGHT (POUNDS)	APPROX. GROSS WT. OF RAW STOCK PER MAKE-ASSEMBLIES	REMARKS
1	BODY, NOZZLE & TRAP ASSEMBLY		82-5-48A				AXS-1397	17.5		
2	SHELL AND ADAPTER ASSEMBLY		82-5-48B					10.4		E
3	CAGE TRAP ASSEMBLY		82-5-31F					1.3		
4	CONTACT RING ASSEMBLY		82-5-67A					.23		
5	SHELL AND ADAPTER ASSEMBLY		82-5-48C					10.26		F
6										
7										
8										
9	NOZZLE PLATE-CONTACT RING ASS'Y		82-5-50A					3.1		
10	SHELL ASSEMBLY	1	82-5-32A					8.76		F,L
11										
12										
13	TERMINAL ASSEMBLY	1	82-5-50G				COMMERCIAL			T,A
14	TERMINAL ASSEMBLY	1	82-5-50H				COMMERCIAL			U,B
15	TRAP ASSEMBLY		82-5-31A					1.9		
16										
17	ADAPTER, FUZE	1	82-5-43C	BAR	STEEL	FS1119 OR FS1022	QQ-S-633	1.5		K
18	BODY	1	82-5-49A	TUBING	STEEL TUBING, TYPE I	WD 8630 OR WD X4130	57-180			J X
19	CLOSURE, NOZZLE	1	82-5-67E	MOLDED	LAMINATED PHENOLIC MATERIAL	TYPE III GRADE LE	HH-P-256	.05		
20										
21	DISC	1	82-5-50C	SHEET	ASBESTOS		COMMERCIAL			
22	DISC, BLOWOUT	1	82-5-50D	SHEET	STEEL	WD 1020	57-136			J,S
23	NUT, SCREW, MACHINE	1	82-5-50L		BRASS		COMMERCIAL			G
24	PLATE, NOZZLE	1	82-5-50F	BAR	STEEL		QQ-S-633	2.9		J,W
25	PLATE, TRAP	1	82-5-31D	STRIP	STEEL	WD 1020 TO WD 1030	57-136	.6		
26										
27										
28	RETAINER, WIRE	1	82-5-31G	SHEET	STEEL	WD 1010 TO WD 1020	57-136	.03		
29	RING	1	82-5-50B	BAR	STEEL	FS 1010 TO FS 1020	QQ-S-633			J,R
30	RING, CONTACT	1	82-5-67D	SHEET	STEEL	WD 1010 TO WD 1020	57-136			J,D
31	RING, INSULATOR	1	82-5-67B		LAMINATED PHENOLIC MATERIAL	TYPE III GRADE LE	HH-P-256			
32	RING, SUPPORT	1	82-5-67C	SHEET	STEEL	WD 1010 TO WD 1020	57-136			J
33	RING, TRAP	1	82-5-31B	SHEET	STEEL	WD 1010 TO WD 1020	57-136	.2		
34	RIVET, TAPERED	1	82-5-50M		COPPER		COMMERCIAL			M
35	SCREW, DRIVE, ROUND-HEAD		82-5-50N	#6 x 5/16	STEEL		COMMERCIAL			
36	SCREW, MACHINE	1	82-5-50K		BRASS		COMMERCIAL			G
37										
38										
39										
40										
41	WIRE, TRAP	10	82-5-31C	WIRE	STEEL, BARE	FS1010 OR FS1020	QQ-W-461	.10		
42	WASHER, INSULATOR	1	82-5-50E	SHEET	LAMINATED PLASTIC		COMMERCIAL			U
43										
44										
45					CEMENT, PETTMAN		JAN-C-99			
46										
47					LACQUER, ETHYL CELLULOSE, SPECIAL		3-198			
48										
49					PAINT, ACID-PROOF BLACK	TYPE I	JAN-P-450			
50										
51										
52										
53										
54					INK, STENCIL, WHITE		TT-I-558			Y
55					OIL, LUBRICATING, PRESERVATIVE	SPECIAL	2-120			
56					LACQUER, ENAMEL, OLIVE-DRAB	I OR II	JAN-L-73			H
57					THREAD LUTING MIXTURE					P
58										
59					SOLDER, WIRE	COMP 3a 50	QQ-S-571			
60					FLUX, SOLDERING, PASTE		O-F-506			
61					ADHESIVE, RUBBER, SYNTHETIC	TYPE I	62-4			

LIST OF SPECIFICATIONS

LINE NO.	LIST OF SPECIFICATIONS	SPEC. NUMBER *	REQUIRED BY
1	AMMUNITION, EXCEPT SMALL ARMS AMMUNITION, GENERAL SPEC. FOR	50-0-1	DRG. 82-5-48
2	CEMENT, PETTMAN	JAN-C-99	DRG 82-5-48
3	ADHESIVE, SYNTHETIC RUBBER	62-4	DRG. 82-5-50
4	OIL, LUBRICATING, PRESERVATIVE, SPECIAL	2-120	DRG. 82-5-50
5	BRASS, COMMERCIAL; BARS, PLATES, RODS, SHAPES, SHEETS & STRIPS	QQ-B-611	DRG. 82-5-50
6	COPPER; BARS, RODS, PLATES ETC.	QQ-C-501	DRG. 82-5-50
7	ENAMEL, LUSTRELESS, QUICK-DRYING	JAN-E-74	DRG. 82-5-49
8	INK, STENCIL, OPAQUE, FOR MARKING NONPOROUS SURFACES	TT-I-558	DRG. 82-5-49
9	FINISHES, PROTECTIVE FOR IRON AND STEEL PARTS	57-0-2	DRG. 82-5-49
10	FLUX, SOLDERING; PASTE	O-F-506	DRG. 82-5-50
11	LACQUER ENAMEL, LUSTRELESS	JAN-L-73	DRG. 82-5-49
12	LACQUER, ETHYL CELLULOSE SPECIAL (FOR ORDNANCE MATERIEL)	3-198	DRG. 82-5-48
13			
14	METALS, GENERAL SPECIFICATIONS FOR INSPECTION OF	QQ-M-151	57-136
15	PAINT, ACID PROOF BLACK, FOR AMMUNITION	JAN-P-450	DRG. 82-5-43
16			
17	PAINT, VARNISH, LACQUER, AND RELATED MATERIALS, ETC	TT-P-141	JAN-E-74
18	PHENOLIC-CONDENSATION-PRODUCTS; LAMINATED (FOR ELECTRICAL PURPOSES)	HH-P-256	DRG. 82-5-67
19	ROCKETS, HE, 4.5 INCH, M16A2 AND M16A1 AND ROCKETS, PRACTICE, 4.5 INCH,		
20	M17A2 AND M17A1, METAL PARTS FOR	AXS-1397	DRG. 82-5-48
21	SOLDER; SOFT (TIN, TIN-LEAD, AND LEAD-SILVER)	QQ-S-571	DRG. 82-5-50
22	STEEL, CARBON AND ALLOY, SHEETS & STRIPS	57-136	DRG. 82-5-31
23	STEEL, CARBON; BARS (GENERAL PURPOSE)	QQ-S-633	DRG. 82-5-49
24	ORDNANCE FINISHES (SURFACE ROUGHNESS)	URAX-6	50-0-1
25	SURFACE ROUGHNESS WAVINESS AND LAY	MIL-STD-10	DRG 82-5-50
26	PACKING AND MARKING FOR DOMESTIC SHIPMENT OF INERT AMMUNITION, ETC	MIL-P-10025	DRG. 82-5-50
27			
28	TUBING, MECHANICAL OR STRUCTURAL STEEL, CARBON & ALLOY SEAMLESS, ETC.	57-180	DRG. 82-5-49
29	WELDING SYMBOLS	JAN-STD-19	DRG 82-5-67
30	WIRE, STEEL (CARBON); BARE AND ZINC-COATED	QQ-W-461	DRG 82-5-31
31			

* THE SPECIFICATION NUMBERS SHOWN ARE BASIC NUMBERS ONLY. WHEN A SPECIFICATION IS REVISED A LETTER IS AFFIXED TO ITS BASIC NUMBER. SPECIFICATIONS REFERRED TO IN THESE SPECIFICATIONS AND NOT LISTED HEREON, SHALL NOT APPLY.

NOTES:

A- AIRCRAFT MARINE PRODUCTS INC. (HARRISBURG, PA.) PART NO. 33124-5 OR APPROVED SUBSTANTIAL EQUAL.
B- AIRCRAFT MARINE PRODUCTS INC. (HARRISBURG, PA.) PART NO. 33125-7 OR APPROVED SUBSTANTIAL EQUAL.

D- ALTERNATIVE MATERIAL :- COPPER, LIGHT COLD ROLLED TEMPER SPEC. QQ-C-501.
E- USED ONLY ON ROCKETS, M16A2, M17A2, M20E1 AND M21E1.
F- USED ONLY ON ROCKETS, M16A1, M17A1, M20E2 AND M21E2.
G- REQUIRED ONLY WHEN ALTERNATIVE CONSTRUCTION IN ASS'Y, 82-5-50A IS USED.
H- ALTERNATIVE MATERIAL :- ENAMEL, OLIVE DRAB, GRADE I OR II, SPEC JAN-E-74.
J- PROTECTIVE FINISH :- TYPE I, CLASS RSC, SPEC 57-0-2.
K- ALTERNATIVE MATERIAL :- STEEL, FS1020 TO FS1045. FS1109, FSB1112, FS1118 TO FS1151. SPEC QQ-S-633.
L- PROTECTIVE FINISH :- TYPE II, CLASS C, SPEC 57-0-2.

M- NOT REQUIRED WHEN SCREW, DRIVE, ROUNDHEAD, 82-5-50N, IS USED.
N- FOR WELDING SYMBOLS, SEE JAN-STD-19.
P- THREAD LUTING MIXTURE :-
DEWAXED WHITE SHELLAC ____ 25% COMMERCIAL
ALCOHOL ____ 25%
BRONZE POWDER ____ 50% COMMERCIAL SPEC 57-180
R- ALTERNATIVE MATERIAL :- STEEL TUBING, WD1010 TO WD1020, TYPE I OR II.
S- ALTERNATIVE MATERIAL :- BRASS, SHEET, HALF HARD, .024±.001 THICKNESS, SPEC. QQ-B-611.
T- NOT REQUIRED WHEN ALTERNATIVE CONSTRUCTION IN ASSEMBLY 82-5-50A IS USED.
U- 2 REQUIRED WHEN ALTERNATIVE CONSTRUCTION IN ASSEMBLY 82-5-50A IS USED.
W- STEEL TO BE USED :- FS1137, FS1141, FS1117, FS1118 OR FS1020 TO FS1045. SPEC QQ-S-633.
X- WEIGHT :- 12.0 MIN. TO 12.5 LBS. MAX.
Y- ALTERNATIVE FOR STAMPING ON BODY.

[redacted]

DEPT. OF ARMY, ORD. DEPT., PICATINNY ARSENAL
CLASSIFICATION CANCELLED
BY AUTHORITY OF THE CHIEF OF ORDNANCE
E. J. NESSLEY, CAPT. O. D. SECURITY OFFICER
DATE 2-14-50 M Thompson

THIS DRAWING APPLIES TO THE FOLLOWING ROCKETS :-
ROCKET, HE, 4.5-INCH, M16A2
ROCKET, PRACTICE, 4.5-INCH, M17A2
ROCKET, HE, 4.5-INCH, M16A1
ROCKET, PRACTICE, 4.5-INCH, M17A1
ROCKET, HE, 4.5 INCH, M21E1
ROCKET, PRACTICE, 4.5 INCH, M21E1
ROCKET, HE, 4.5 INCH, M21E2
ROCKET, PRACTICE, 4.5 INCH, M21E2

ROCKET, 4.5-INCH LIST OF PARTS AND SPECS. FOR METAL PARTS.

SEPTEMBER 6, 1944 | CLASS 82 | DIVISION 5 | DRAWING 48A | FILE

REVISIONS

1	10-2-44
2	11-7-44
3	3-15-45
4	8-15-45
5	2-14-50

TOLERANCE ON DIMENSIONS NOT OTHERWISE SPECIFIED
DECIMAL ±
FRACTIONAL ±
ANGULAR ±

D'FTSMAN F.G | TRACER Bgm | ENGINEER
CHECKER B. | ENG MGT G.E.J.

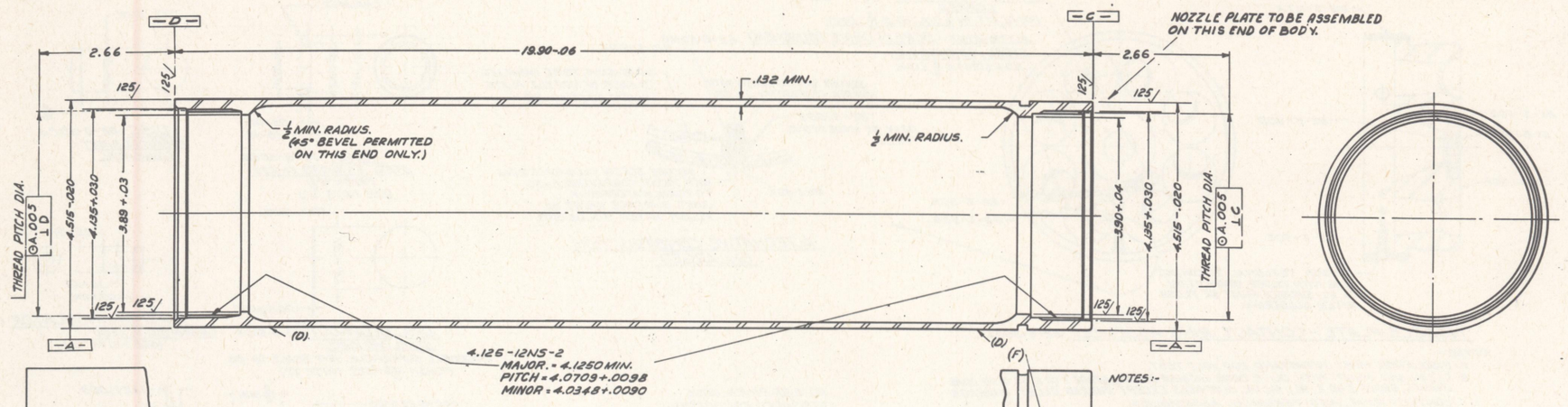
DRG. PERTAINS TO
82-5-48

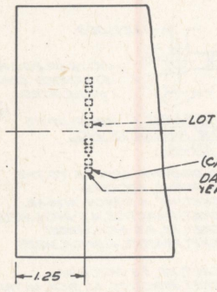
SUBMITTED: H.W. Beatty ENGR. ORD. DEPT., U.S.A.
EXAMINED: H.J. Jones Jr. JUNIOR ORD. DEPT., U.S.A.
APPROVED BY ORDER OF THE CHIEF OF ORDNANCE: G.L. Trimble COL. ORD. DEPT., U.S.A.

D

ORDNANCE DEPT., U.S.A.

LINE NO.	LIST OF DRAWINGS	DRAWING NUMBER
1	BODY DETAILS	82-5-49
2	LIST OF PARTS & SPECS. FOR METAL PARTS	82-5-49A
3	STD FOR DIMENSIONING & TOLERANCING	30-1-7

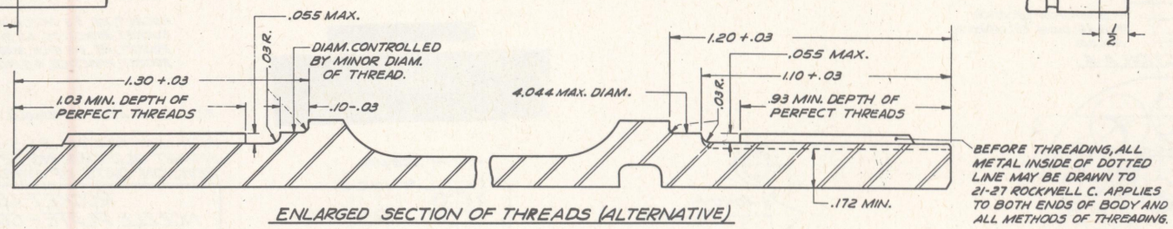




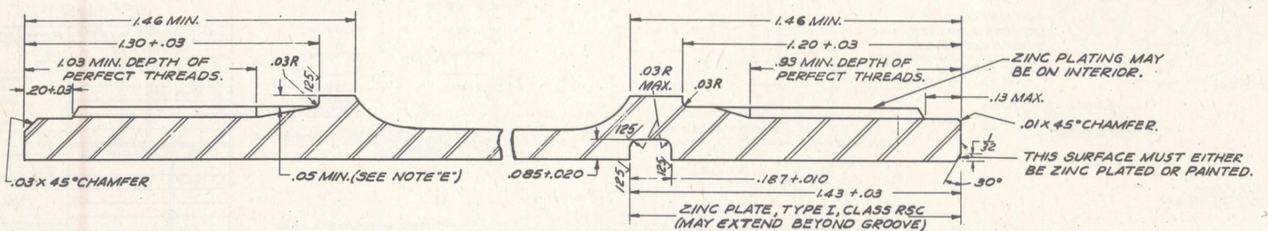
BODY 82-5-49A4
STEEL TUBING, WD 8630 OR WD X 4130, TYPE I

MIN. PHYSICAL PROPERTIES
YIELD | 135,000 P.S.I.
E L. | 8% IN 2. INCHES

WEIGHT:-12.0 MIN. TO 12.5 LBS. MAX.



ENLARGED SECTION OF THREADS (ALTERNATIVE)



ENLARGED SECTION OF THREADS

ALTERNATIVE:-ZINC OR SILVER, SPRAYED, .003 MAX. THICKNESS. (b)
ALTERNATIVE:-SILVER CONDUCTIVE PAINT COATING. (b)
(b) NOT APPLICABLE TO INTERIOR.

NOTES:-

2.-THICKNESS BETWEEN PITCH DIAMETER OF THE 4.125-12NS-2 THREADS ON EACH END AND THE OUTSIDE DIAMETER OF THE BODY SHALL NOT BE LESS THAN .197 INCH.

4.- OUT OF ROUNDNESS OF BODY OUTSIDE DIAMETER IS PERMISSIBLE PROVIDED THE MAXIMUM MEASUREMENT IS NOT MORE THAN 4.520 AND THE MINIMUM MEASUREMENT NOT LESS THAN 4.490. THE AVERAGE OF THE MAXIMUM AND MINIMUM MEASUREMENTS TAKEN IN ANY ONE PLANE SHALL BE WITHIN THE PRESCRIBED TOLERANCE. THE BODY SHALL PASS FREELY THRU A RING GAGE 4.5217-.0004 DIAMETER (BASIC 4.522) 1½ INCHES WIDE.

B.- APPLY PROTECTIVE PHOSPHATE FINISH, TYPE II, CLASS C, THEN COAT EXTERIOR SURFACE OF BODY, EXCEPT ZINC PLATED SURFACE, WITH OLIVE-DRAB LACQUER ENAMEL, GRADE I OR II, OR OLIVE-DRAB ENAMEL, GRADE I OR II; AND INTERIOR SURFACE OF BODY, EXCEPT THREADS, WITH ETHYL CELLULOSE LACQUER.

C- STAMP WITH ⅛ LETTERS AND FIGURES .01 DEEP WHERE INDICATED ON BODY. (ALTERNATIVE BODY MARKING:- MARK WITH WHITE STENCIL INK, LETTERS AND FIGURES ¼ HIGH).

D- CLEARANCE STEP ON MACHINED BODIES PERMITTED IF THE DIAMETER AND WALL THICKNESSES ARE WITHIN THE PRESCRIBED TOLERANCE.

E:- TRAP SEAT WIDTH MAY BE LESS THAN MIN. FOR A TOTAL DISTANCE ON CIRCUMFERENCE NOT TO EXCEED 1., BUT IN NO CASE SHOULD WIDTH BE LESS THAN .04.

F.- STAMP WITH ⅛ MIN. LETTER "H", .01 DEEP WHERE INDICATED ON ALL MOTOR BODIES WHICH MEET HYDROSTATIC TEST REQUIREMENTS.

G- PRIOR TO PAINTING, BODY MUST WITHSTAND AN INTERNAL HYDROSTATIC PRESSURE OF 7000 PSI WITHOUT LEAKAGE OR DEFORMATION.

THIS DRAWING APPLIES TO THE FOLLOWING ROCKETS:-
ROCKET, HE, 4.5-INCH, M16A2
ROCKET, PRACTICE, 4.5-INCH, M17A2
ROCKET, HE, 4.5-INCH; M16A1
ROCKET, PRACTICE, 4.5-INCH, M17A1
ROCKET, HE, 4.5-INCH, M20E1
ROCKET, PRACTICE, 4.5-INCH, M21E1
ROCKET, HE, 4.5-INCH, M20E2
ROCKET, PRACTICE, 4.5-INCH, M21E2

DEPT. OF ARMY, ORD. DEPT., PICATINNY ARSENAL
CLASSIFICATION CANCELLED
BY AUTHORITY OF THE CHIEF OF ORDNANCE
E. J. HESSLEY, CAPT. O. D., SECURITY OFFICER
DATE 2-14-50 [redacted]

SCALE: ½, ¼.

ROCKET, 4.5-INCH. BODY DETAILS

SEPTEMBER 6, 1944

REVISIONS			
1	10-2-44		
2	3-15-45		
3	8-15-45		
4	2-14-50		

DRG. PERTAINS TO
82-5-48

CLASS	DIVISION	DRAWING	FILE
82	5	49	

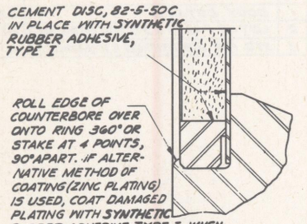
TOLERANCE ON DIMENSIONS NOT OTHERWISE SPECIFIED
DECIMAL ±
FRACTIONAL ±
ANGULAR ±

D'YTSMAN O.G.J. | TRACER Egm. | ENGINEER
CHECKED M.L.S. | C.C. | ENGINEER 66d

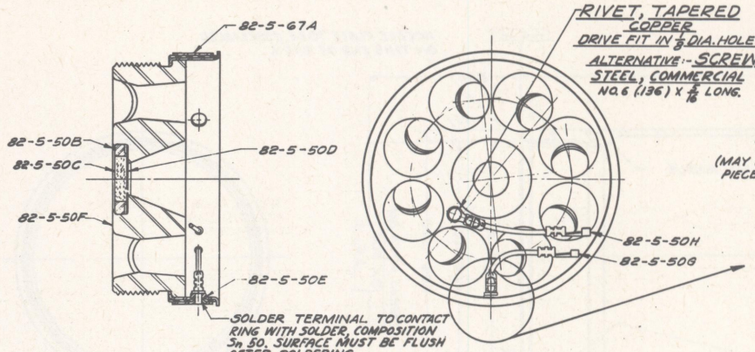
SUBMITTED:- D. W. Beatty, ENGR. ORD. DEPT. U. S. A.
EXAMINED:- H. T. Jones Jr., MANF. ORD. DEPT. U. S. A.
APPROVED, BY ORDER OF THE CHIEF OF ORDNANCE:- D. W. Ireland, COL. ORD. DEPT. U. S. A.

D

ORDNANCE DEPT., U. S. A.

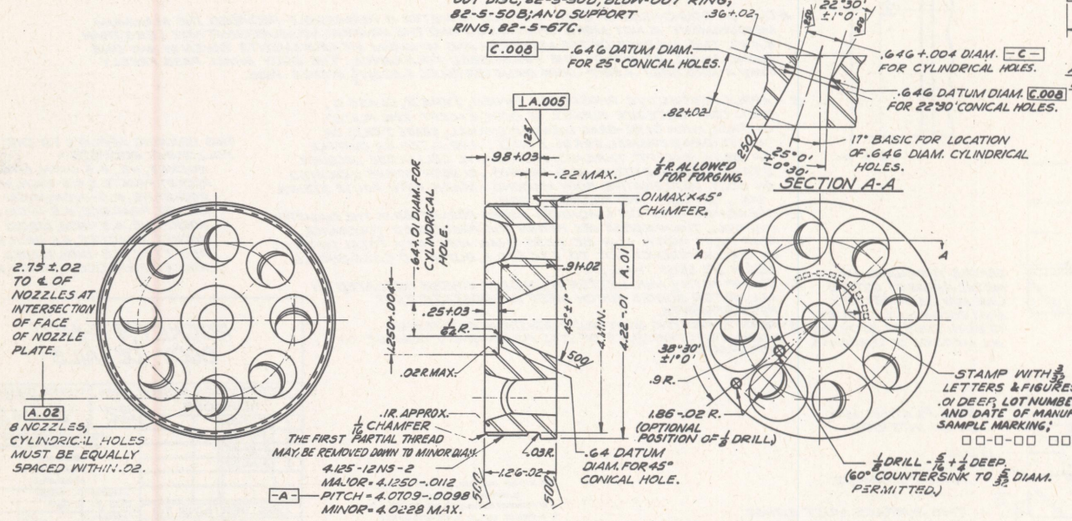


ENLARGED VIEW
SCALE 4/1



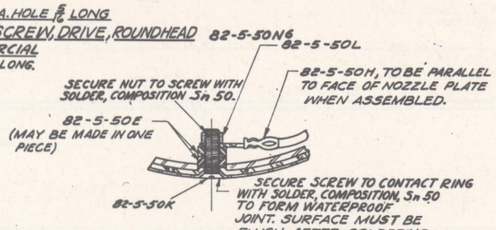
NOZZLE PLATE - CONTACT RING ASSEMBLY 82-5-50A6

NOTES:-
A- INSULATION MUST WITHSTAND 200 VOLT TEST.
B- CLEAN AND PAINT WITH OLIVE DRAB LACQUER ENAMEL, GRADE I OR II, OR OLIVE DRAB ENAMEL, GRADE I OR II, ALL METAL SURFACES EXCEPT THREAD RELIEF, THREADS CONTACT RING, AND TERMINAL ASSEMBLIES.
C- COAT THREADS WITH OIL, LUBRICATING, PRESERVATIVE, SPECIAL.
D- ALTERNATIVE COATING:- ZINC PLATING TYPE I, CLASS RSC, IS PERMITTED ON THE FOLLOWING PARTS BEFORE ASSEMBLY AS IN NOTES "B" & "C" ABOVE: NOZZLE PLATE, 82-5-50F; BLOW-OUT DISC, 82-5-50D; BLOW-OUT RING, 82-5-50B; AND SUPPORT RING, 82-5-67C.

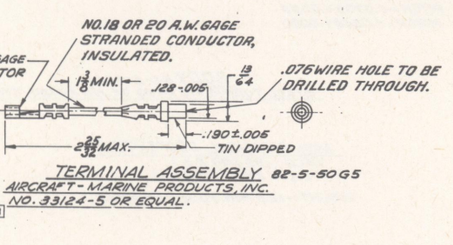


PLATE, NOZZLE 82-5-50F6
STEEL, FS1137 OR FS1141, FS1117, FS1118, FS1020 TO FS1095 MIN. YIELD 40,000 PSI.
(SEE NOTE "D")

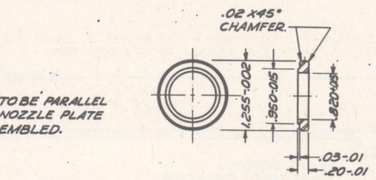
(d) - 5/16 DIA. X 1/4 DEEP MANUFACTURER'S LOCATING HOLE PERMITTED ON THE FACE, BACK OR THREADED SECTION OF NOZZLE PLATE, PROVIDED FUNCTIONAL AND STRENGTH CHARACTERISTICS ARE NOT IMPAIRED. LOCATION TO BE APPROVED BY OFFICE OF THE CHIEF OF ORDNANCE.



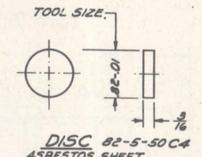
ALTERNATIVE CONSTRUCTION ENLARGED



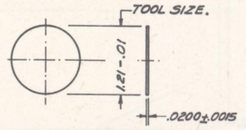
TERMINAL ASSEMBLY 82-5-50G5
AIRCRAFT-MARINE PRODUCTS, INC.
NO. 33124-5 OR EQUAL.



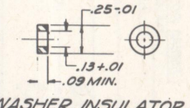
RING 82-5-50B6
STEEL, FS .010 TO FS 1020
FINISH 125
(SEE NOTE "D")



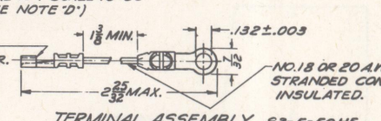
DISC 82-5-50C4
ASBESTOS SHEET, COMMERCIAL



DISC, BLOW-OUT 82-5-50D6
STEEL, ND 1020
ROCKWELL SUPERFICIAL 15-T SCALE 78-83
FINISH 125 (SEE NOTE "D")



WASHER, INSULATOR 82-5-50E6
LAMINATED PLASTIC
(SEE NOTE "A")

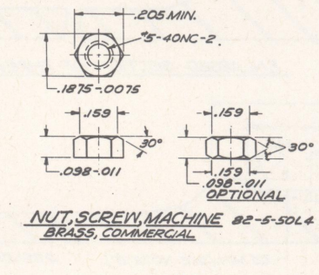


TERMINAL ASSEMBLY 82-5-50H5
AIRCRAFT-MARINE PRODUCTS, INC.,
NO. 33125-7 OR EQUAL.

THIS DRAWING APPLIES TO THE FOLLOWING ROCKETS:-
ROCKET, HE, 4.5-INCH, M16A2.
ROCKET, PRACTICE, 4.5-INCH, M17A2.
ROCKET, HE, 4.5-INCH, M20E1.
ROCKET, PRACTICE, 4.5 INCH, M21E1.

ROCKET, HE, 4.5 INCH, M16A1.
ROCKET, PRACTICE, 4.5 INCH, M17A1.
ROCKET, HE, 4.5 INCH, M20E2.
ROCKET, PRACTICE, 4.5 INCH, M21E2.

[redacted]



NUT, SCREW, MACHINE 82-5-50L4
BRASS, COMMERCIAL

SCREW, MACHINE 82-5-50K4
BRASS, COMMERCIAL

FOR ALTERNATIVE MATERIALS SEE DRG. 82-5-48A.

WITH NEW TRACING 82-5-67 SUPERSEDES IN PART OLD TRACING 82-5-50 UNDER REVISION DATE OF MARCH 15, 1945

DEPT. OF ARMY, ORD. DEPT., PICATINNY ARSENAL
CLASSIFICATION CANCELLED
BY AUTHORITY OF THE CHIEF OF ORDNANCE
E. J. NESSLEY, CAPT. O. D. SECURITY OFFICER
DATE 2-14-50

SCALE, INCHES:- 1/1, 3/4, 1/2

ROCKET, 4.5-INCH, NOZZLE PLATE - CONTACT RING, ASSEMBLY AND DETAILS.

SEPTEMBER 6, 1944	CLASS	DIVISION	DRAWING	FILE
REVISIONS	82	5	50	

3	12-27-44
4	3-15-45
5	8-15-45
6	2-14-50

TOLERANCE ON DIMENSIONS NOT OTHERWISE SPECIFIED
DECIMAL ±
FRACTIONAL ±
ANGULAR ±

DRAFTSMAN Bgm. TRACER ENGINEER
CHECKER E.J.S. HEAD ENGINEER

DRG. PERTAINS TO
82-5-48

SUBMITTED:
LT. COL., ORD. DEPT. U.S.A.

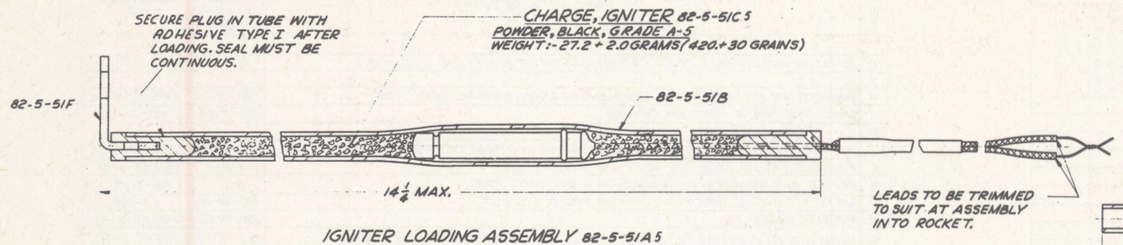
EXAMINED:
LT. COL., ORD. DEPT. U.S.A.

APPROVED BY ORDER OF THE CHIEF OF ORDNANCE:
C.S. Reed by a.c.
COL., ORD. DEPT., U.S.A.

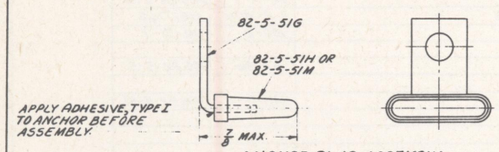
D

ORDNANCE DEPT., U.S.A.

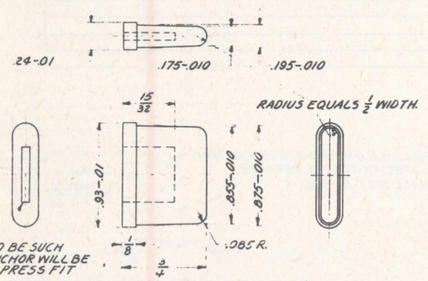
NOTE:- DIP COMPLETED ASSEMBLY INCLUDING 1 TO 2 INCHES OF SQUIB LEAD WIRES IN BAKELITE VARNISH VF-612/TOLUENE (70:30) COMPOSITION.



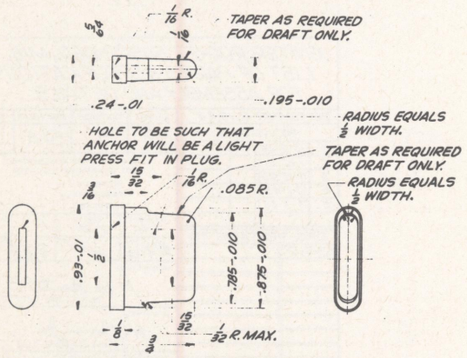
IGNITER LOADING ASSEMBLY 82-5-51A 5



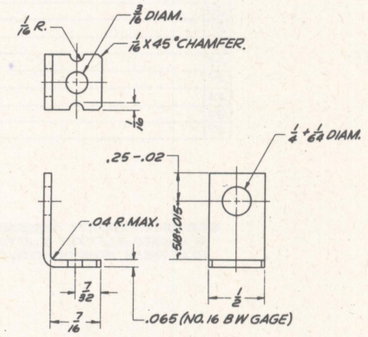
ANCHOR PLUG ASSEMBLY 82-5-51F 5



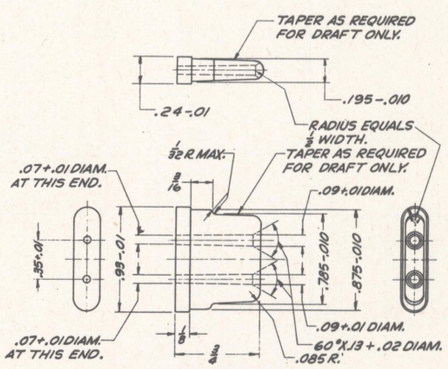
PLUG, ANCHOR (ALTERNATIVE) 82-5-51M 5
ETHYL CELLULOSE, TYPE III, GRADE 8



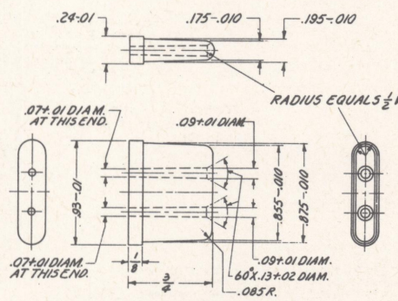
PLUG, ANCHOR 82-5-51H 5
ETHYL CELLULOSE, TYPE III, GRADE 8



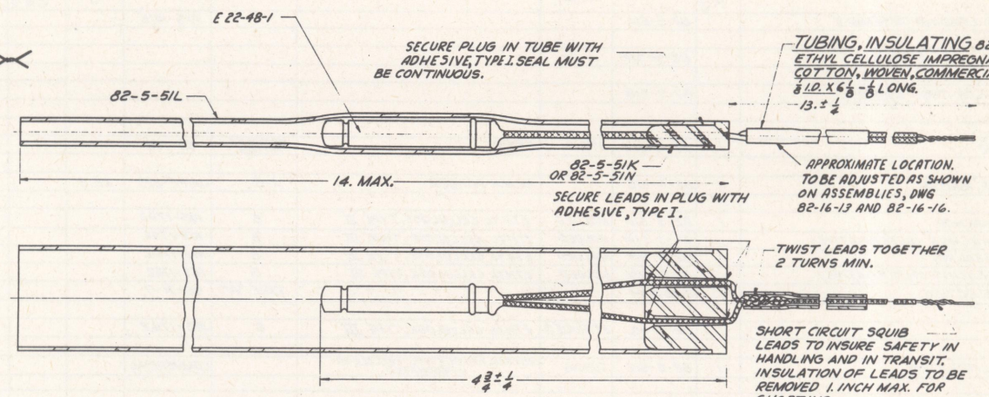
ANCHOR 82-5-51G 3
STEEL, WD 1010 TO WD 1025



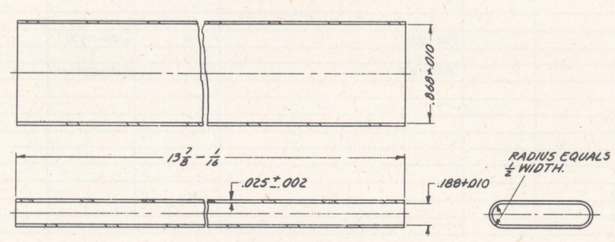
PLUG, SEALING 82-5-51K 5
ETHYL CELLULOSE, TYPE III, GRADE 8



PLUG, SEALING (ALTERNATIVE) 82-5-51N 5
ETHYL CELLULOSE, TYPE III, GRADE 8



SQUIB-PLUG-TUBE ASSEMBLY 82-5-51B 5



TUBE 82-5-51L 5
ETHYL CELLULOSE, TYPE III, GRADE 8

Classification cancelled or changed to RESTRICTED, by authority of CCAIVO 25-27 28 SER 44
By [illegible]

RESTRICTED

FOR PROTECTIVE FINISH SEE DWG 82-5-51A

LINE NO.	LIST OF DRAWINGS	DRAWING NUMBER
1	IGNITER, ASSEMBLY AND DETAILS	82-5-51
2	LIST OF PARTS AND SPECIFICATIONS	82-5-51A
3	SQUIB, ELECTRIC	E 22-48-1

SCALE:- 2/1

IGNITER, ROCKET SUSPENDED, M18. ASSEMBLY AND DETAILS.

SEPTEMBER 6, 1944	CLASS	DIVISION	DRAWING	FILE
REVISIONS	82	5	51	
1 10-2-44				
2 10-31-44				
3 [illegible]				
4 8-15-45				
5 3-3-49				

TOLERANCE ON DIMENSIONS NOT OTHERWISE SPECIFIED
DECIMAL ± .010
FRACTIONAL ± 1/64
ANGULAR ± 1°

DRAWN H.E.B. TRACER B.M. ENGINEER
CHECKER B. ENGINEER E.E.B.

DRG. PERTAINS TO
82-16-13
82-16-16
82-16-8

SUBMITTED:- G. W. Beatty, ENG'R., ORD. DEPT. U.S.A.
EXAMINED:- H. J. Jones Jr., Junior, ORD. DEPT. U.S.A.
APPROVED BY ORDER OF THE CHIEF OF ORDNANCE:- L. U. Bailey, LT. COL., ORD. DEPT. U.S.A.

D

ORDNANCE DEPT., U.S.A.

LIST OF PARTS

LINE NO.	NAME OF PART	NUMBER REQ'D PER COMPONENT	PIECEMARK	MATERIAL: SIZE OR FORM	MATERIAL: KIND	MATERIAL: GRADE	MATERIAL: SPEC. NUMBER	APPROX. UNIT WT. IN GRAMS	APPROX. GROSS WT OF RAW STOCK PER 1000 ASSEMBLIES	REMARKS
1	IGNITER LOADING ASSEMBLY		82-5-51A				AXS-1415			
2										
3	ANCHOR PLUG ASSEMBLY		82-5-51F							
4										
5	SQUIB-PLUG-TUBE ASSEMBLY		82-5-51B							
6										
7										
8	ANCHOR	1	82-5-51G	STRIP	STEEL	WD 1010 TO WD 1025	57-136			E
9										
10	CHARGE, IGNITER	1	82-5-51C		BLACK POWDER	A-5	JAN-P-223	28.2		
11										
12	PLUG, ANCHOR	1	82-5-51H	MOLDED	ETHYL CELLULOSE, TYPE III	B	AXS-1762			C
13	PLUG, ANCHOR (ALTERNATIVE)		82-5-51M	MOLDED	ETHYL CELLULOSE, TYPE III	B	AXS-1762			
14	PLUG, SEALING	1	82-5-51K	MOLDED	ETHYL CELLULOSE, TYPE III	B	AXS-1762			D
15	PLUG, SEALING (ALTERNATIVE)		82-5-51N	MOLDED	ETHYL CELLULOSE, TYPE III	B	AXS-1762			
16	SQUIB, ELECTRIC	1	EZ2-48-1			TYPE "A"	96-71-7			
17										
18	TUBE	1	82-5-51L	EXTRUDED	ETHYL CELLULOSE, TYPE III	B	AXS-1762			
19										
20	TUBING, INSULATING	1	82-5-51E	TUBING	COTTON, WOVEN, ETHYL CELLULOSE IMPREGNATED		COMMERCIAL			
21										
22										
23					ADHESIVE, TYPE I		62-3			
24										
25										
26					TOLUENE	B	JAN-T-171			
27										
28					VARNISH		COMMERCIAL			F
29										
30										
31										
32										
33										
34										
35										
36										
37										

(C) NOT REQUIRED WHEN PLUG, ANCHOR (ALTERNATIVE) PC. MK. 82-5-51M IS USED.
(D) NOT REQUIRED WHEN PLUG, SEALING (ALTERNATIVE) PC. MK. 82-5-51N IS USED.
(E) PROTECTIVE FINISH, TYPE I, CLASS R5, SPEC. 57-0-2.
(F) BAKELITE, VF 612, VARNISH; BAKELITE CORP (NEW YORK, NY) OR SUBSTANTIAL APPROVED EQUAL.

LIST OF SPECIFICATIONS

LINE NO.	LIST OF SPECIFICATIONS	SPEC. NUMBER *	REQUIRED BY
1			
2	ADHESIVE AND DIPPING COMP FOR NITROGLYCERIN-REG ETHYL CELLULOSE	62-3	DRG. 82-5-51
3			
4	AMMUNITION, EXCEPT SMALL ARMS AMMUNITION, GENERAL SPEC. FOR	50-0-1	DRG. 82-5-51
5	CANS; TIN-PLATE FRICTION COVERS	RR-C-96	96-71-7
6			
7	IGNITER ASSEMBLY FOR ROCKET, HE, 4.5-INCH AND PRACTICE, 4.5-INCH	AXS-1415	DRG. 82-5-51
8	FINISHES, PROTECTIVE, FOR IRON AND STEEL PARTS	57-0-2	DRG. 82-5-51
9	PAINTS AND RELATED MATERIALS, GENERAL SPEC. FOR	3-1	96-71-7
10	METALS, GENERAL SPECIFICATION FOR INSPECTION OF	QQ-M-151	57-136
11	POWDER, BLACK	JAN-P-223	DRG. 82-5-51
12	PLASTIC, ETHYL CELLULOSE, MOLDED SHAPES & EXTRUSIONS (FOR AMM COMP.)	AXS-1762	DRG. 82-5-51
13	SQUIB, ELECTRIC	96-71-7	DRG. 82-5-51
14	PLASTICS, ORGANIC; GENERAL SPECIFICATIONS, TEST METHODS	L-P-406	AXS-1762
15	STANDARD SPECIFICATIONS FOR MARKING SHIPMENTS	100-2	96-71-7
16			
17	STEEL, CARBON AND ALLOY, SHEETS AND STRIPS	57-136	DRG. 82-5-51
18			
19	TOLUENE	JAN-T-171	DRG. 82-5-51
20			
21			
22			
23			
24			
25			
26			
27			

*THE SPECIFICATION NUMBERS SHOWN ARE BASIC NUMBERS ONLY. WHEN A SPECIFICATION IS REVISED A LETTER IS AFFIXED TO ITS BASIC NUMBER. SPECIFICATIONS REFERRED TO IN THESE SPECIFICATIONS AND NOT LISTED HEREON, SHALL NOT APPLY.

Classification canceled or changed to RESTRICTED, by authority of O.C.S.O. 33 NO 35 227 28 38 34 By H.C. Jones Jr Major Ord

RESTRICTED

IGNITER, ROCKET SUSPENDED, M18.
LIST OF PARTS & SPECIFICATIONS FOR ASSEMBLY AND DETAILS.

SEPTEMBER 6, 1944

REVISIONS

1	10-2-44
2	3-10-45
3	8-15-45
4	10-1-45
5	3-3-49

DRG. PERTAINS TO
82-5-51

CLASS	DIVISION	DRAWING	FILE
82	5	51A	

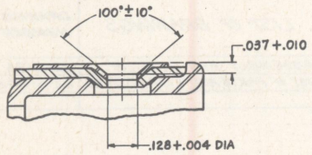
TOLERANCE ON DIMENSIONS NOT OTHERWISE SPECIFIED
DECIMAL ±
FRACTIONAL ±
ANGULAR ±

DFTSMAN F.G. | TRACER J.M. | ENGINEER
CHECKED 9-20-46 | ENGINEER E.E.

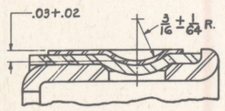
SUBMITTED: J. W. Beatty, ENGR., ORD. DEPT. U.S.A.
EXAMINED: H.C. Jones Jr, MAJOR, ORD. DEPT. U.S.A.
APPROVED BY ORDER OF THE CHIEF OF ORDNANCE: L. U. Bailey, LT. COL., ORD. DEPT. U.S.A.

D

ORDNANCE DEPT., U.S.A.

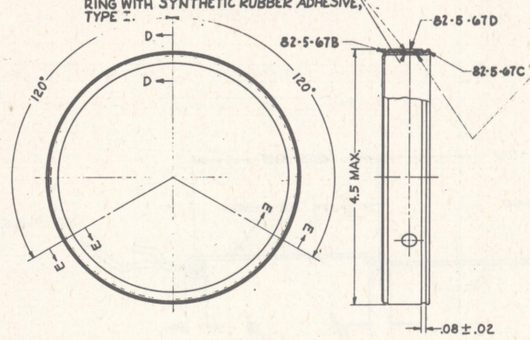


SECTION D-D



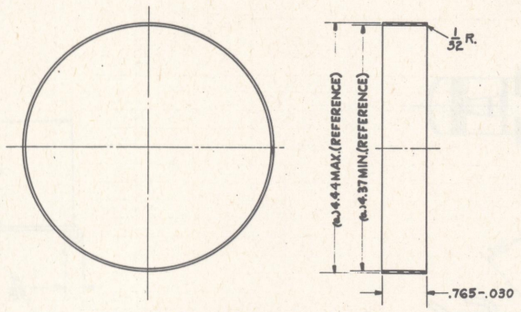
SECTION E-E

SECURE INSULATOR RING TO SUPPORT RING AND CONTACT RING TO INSULATOR RING WITH SYNTHETIC RUBBER ADHESIVE, TYPE II.



CONTACT RING ASSEMBLY 82-5-67A6

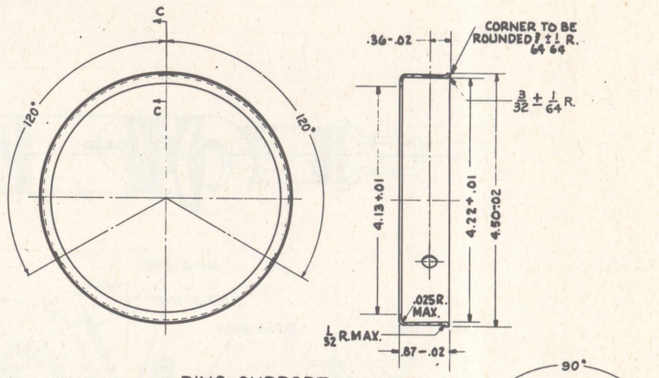
THE 4.13 DIAMETER OF CONTACT RING ASSEMBLY SHALL BE CONCENTRIC WITH THE 4.22 DIAMETER WITHIN .008 AND THE 4.50-02 AND 4.50 MAX. DIAMETER SHALL BE CONCENTRIC WITH THE 4.22 DIAMETER WITHIN .010 MEASURED RADIALLY, AS DETERMINED BY FUNCTIONAL GAGE.



RING, INSULATOR 82-5-67B5

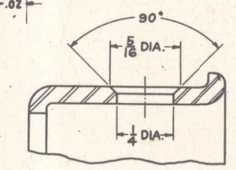
LAMINATED PHENOLIC MATERIAL, TYPE II, GRADE LE, SHEET (.012 MIN. THICK)
INSULATION MUST WITHSTAND 200 VOLT TEST.

(a.) DIAMETERS TO BE MADE TO SUIT ASSEMBLY WITH MATING PARTS.

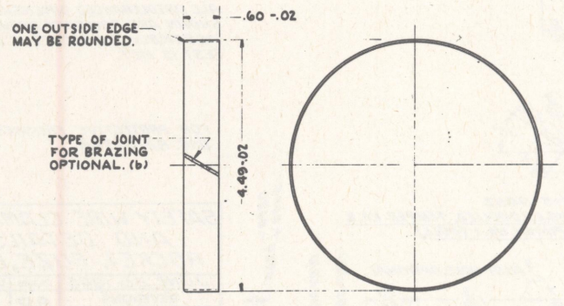


RING, SUPPORT 82-5-67C5

STEEL, WD1010 TO WD1020
.078 ± .003 THICK
(SEE NOTE "D" ON DRAWING 82-5-50.)



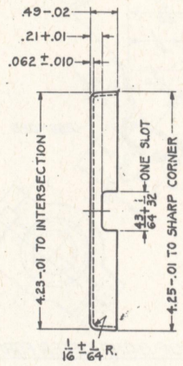
SECTION C-C

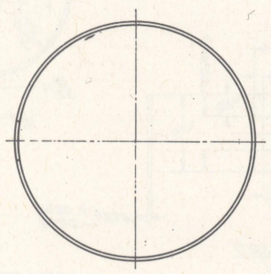


RING, CONTACT 82-5-67D4

STEEL, WD1010 TO WD1020
.018 MIN. THICKNESS

(b) MAY BE MADE EITHER OF A CONTINUOUS RING OR FORMED FROM A STRIP AND BRAZED.





CLOSURE, NOZZLE 82-5-67E6

LAMINATED PHENOLIC MATERIAL, TYPE II, GRADE LE, SHEET

[redacted]

DEPT. OF ARMY, ORD. DEPT., PICATINNY ARSENAL
CLASSIFICATION CANCELLED
BY AUTHORITY OF THE CHIEF OF ORDNANCE
E. J. NESSLEY, CAPT. O. D. SECURITY OFFICER
DATE 2-14-50 M. Thompson

FOR PROTECTIVE FINISHES AND ALTERNATIVE MATERIALS SEE DRG. 82-5-48A.

SCALE, INCHES: 1

THIS DRAWING APPLIES TO THE FOLLOWING ROCKETS:-
ROCKET, HE, 4.5-INCH, M16A2.
ROCKET, PRACTICE, 4.5-INCH, M17A2.
ROCKET, HE, 4.5-INCH, M20E1.
ROCKET, PRACTICE, 4.5-INCH, M21E1.

ROCKET, HE, 4.5 INCH, M16A1.
ROCKET, PRACTICE, 4.5 INCH, M17A1.
ROCKET, HE, 4.5 INCH, M20E2.
ROCKET, PRACTICE, 4.5 INCH, M21E2.

WITH 82-5-50 SUPERSEDES IN PART OLD TRACING 82-5-50 UNDER REVISION DATE OF MARCH 15, 1945

ROCKET, 4.5-INCH, CONTACT RING ASSEMBLY AND DETAILS.

SEPTEMBER 6, 1944

CLASS	DIVISION	DRAWING	FILE
82	5	67	

REVISIONS

3	12-27-44	
4	3-15-45	
5	8-15-45	
6	2-14-50	

TOLERANCE ON DIMENSIONS NOT OTHERWISE SPECIFIED
DECIMAL ±
FRACTIONAL ±
ANGULAR ±

DRG. PERTAINS TO
82-5-50

DRAFTSMAN Jean Mueller TRACER Jean Mueller ENGINEER
CHECKER E.J.S. O.O. HEAD ENGINEER

SUBMITTED: Gmgallagher LT. COL. ORD. DEPT. U.S.A.

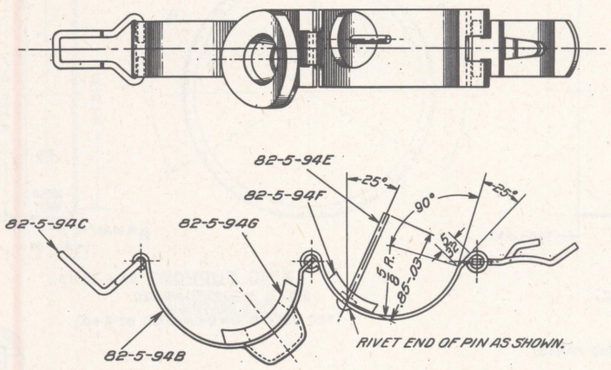
EXAMINED: Ewa Garcia LT. COL. ORD. DEPT. U.S.A.

APPROVED BY ORDER OF THE CHIEF OF ORDNANCE: C.S. Reed by a.a. COL. ORD. DEPT. U.S.A.

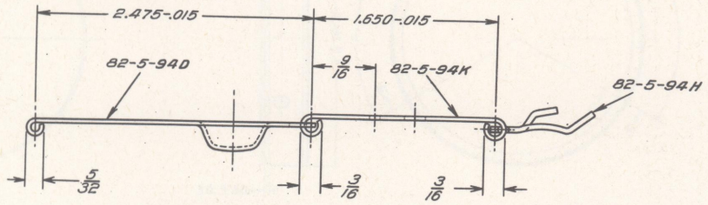
D

ORDNANCE DEPT., U.S.A.

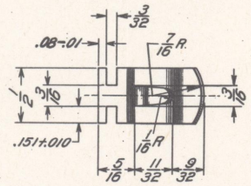
LINE NO.	LIST OF DRAWINGS	DRAWING NUMBER
1	ASSEMBLY AND DETAILS	82-5-94
2	LIST OF PARTS AND LIST OF SPECS	82-5-94A
3		



SAFETY WIRE CLAMP ASSEMBLY 82-5-94A



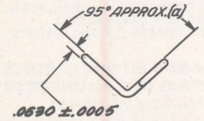
BANDS AND LEVER ASSEMBLY 82-5-94B



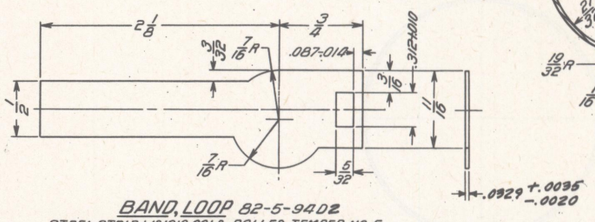
NOTICE THIS DRAWING SHALL NOT BE USED FOR REPRODUCTS OTHER THAN IN PART OR WHOLE WITHOUT WRITTEN PERMISSION FROM PROCUREMENT

ALL UNTOLERANCED DIMENSIONS AND ANGLES SHOWN ARE ADVISORY PROVIDED PROPER ASSEMBLY ON ROCKET IS MADE AND PULL TEST IS MET.

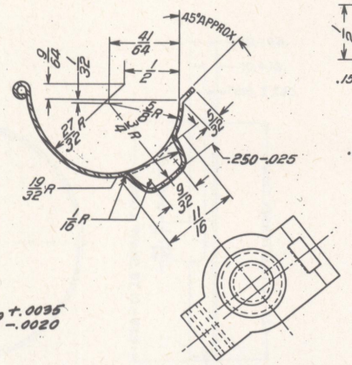
FOR PROTECTIVE FINISHES SEE DRG. 82-5-94A.



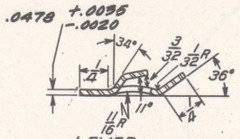
LOOP AFTER BENDING



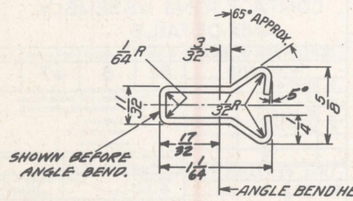
BAND, LOOP 82-5-94D2
STEEL, STRIP, WD1010, COLD-ROLLED, TEMPER NO. 5 (DEAD SOFT), FINISH NO. 1 (DULL)



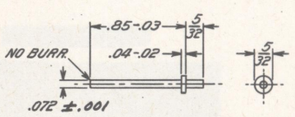
VIEW OF LOOP BAND AFTER FORMING



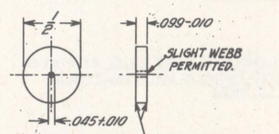
LEVER 82-5-94H2
STEEL, STRIP, WD1010, COLD-ROLLED, TEMPER NO. 2 (HALF-HARD), FINISH NO. 1 (DULL)



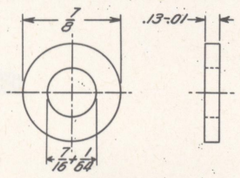
LOOP 82-5-94C2
STEEL WIRE, MUSIC SPRING, COMR A
(a)- ANGLE TO BE SUCH AS TO INSURE A PULL TEST OF 3 LBS MIN TO RELEASE WHEN ASSEMBLED.
ALTERNATE:- ANGLE TO BE SUCH AS TO ASSURE THAT AFTER ASSEMBLY THE LEVER CAN BE RAISED TO A MINIMUM HEIGHT OF 3/32 INCH AND SNAP BACK AGAIN UNDER ITS OWN TENSION.



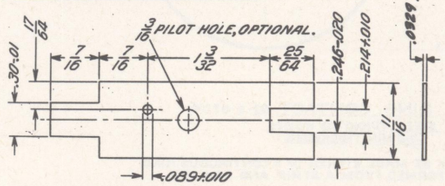
PIN 82-5-94E2
STEEL WIRE, WD1010, TYPE I



WASHER 82-5-94F2
SYNTHETIC RUBBER, GRADE SC-512.



WASHER 82-5-94G
SYNTHETIC RUBBER, GRADE SC-512.



BAND, LEVER 82-5-94K2
STEEL, STRIP, WD1010, COLD-ROLLED, TEMPER NO. 2 (HALF-HARD), FINISH NO. 1 (DULL)

REMOVE ALL BURRS.

SCALE, INCHES, 2/1

SAFETY WIRE CLAMP ASSEMBLY AND DETAILS FOR ROCKET, FUZE, BD, M401.

JUNE 28, 1945 | CLASS 82 | DIVISION 5 | DRAWING 94 | FILE

REVISIONS

1	8-15-45
2	8-20-45
3	4-29-49

TOLERANCE ON DIMENSIONS NOT OTHERWISE SPECIFIED
DECIMAL ±
FRACTIONAL ±
ANGULAR ±

DRG. PERTAINS TO
82-5-23
82-5-20

D'FTSMAN E.S. | TRACER T.W.R. | ENGINEER | CHECKER E.J.S. | HEAD ENGINEER

SUBMITTED: Wm Gallagher, LT. COL., ORD. DEPT. U.S.A.

EXAMINED: Earle Gatlin, LT. COL., ORD. DEPT. U.S.A.

APPROVED BY ORDER OF THE CHIEF OF ORDNANCE: C.S. Reed by a.a., COL., ORD. DEPT. U.S.A.

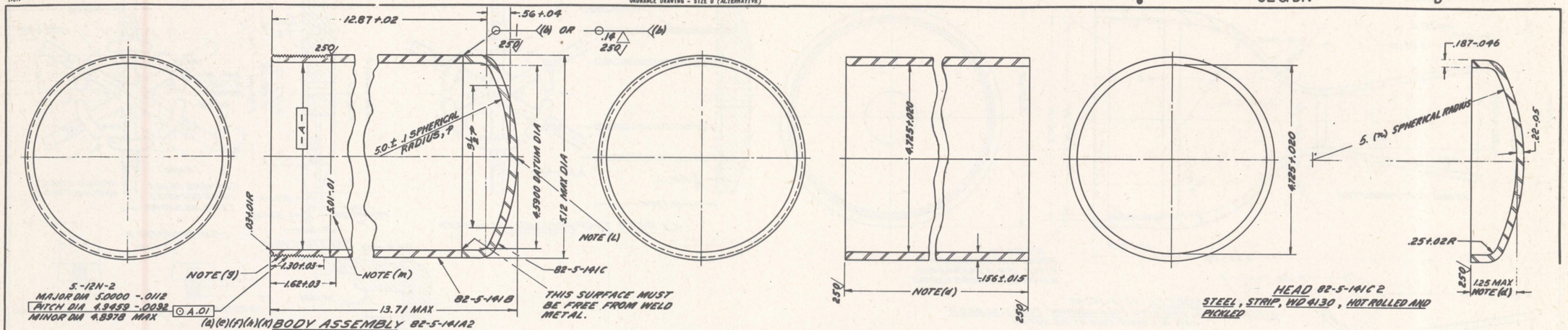
D

ORDNANCE DEPT., U.S.A.

DD FORM 1040 — 11 OCT 47 — SPOIP

ARMY SERVICE FORCES
ORDNANCE DEPARTMENT
ORDNANCE DRAWING - SIZE D (ALTERNATIVE)

CL & DIV D



(a)(c)(f)(h)(k) BODY ASSEMBLY 82-5-141A2
ALTERNATIVE CONSTRUCTION :- MAY BE DRAWN IN ONE PIECE.

BODY 82-5-141B
STEEL, TUBING, WDX 4130, COLD-DRAWN, TYPE 1, CLASS A

HEAD 82-5-141C 2
STEEL, STRIP, WD 4130, HOT ROLLED AND PICKLED

NOTES:-
(a) ASSEMBLY SHALL WITHSTAND AN INTERNAL HYDROSTATIC TEST OF 5500 POUNDS PER SQUARE INCH WITHOUT DISTORTION IN EXCESS OF DRAWING DIMENSIONS.
(b) FOR WELDING SYMBOLS, SEE LIST OF PARTS.
(d) DIMENSION GOVERNED BY MANUFACTURER'S EQUIPMENT.
(c) MIN PHYSICAL PROPERTIES
YIELD STRENGTH____100,000 PSI
ELONG_____10 %
(f) ALL SURFACES SHALL BE CLEANED IN ACCORDANCE WITH GRADE II, SPEC JAN-C-490 BEFORE COATING.
(g) COAT THREADS WITH BAKED PHENOLIC VARNISH. (BAKING OF VARNISH, OPTIONAL). VARNISH MAY BE THINNED BY USING APPROX THREE PARTS THINNER TO ONE PART VARNISH TO GIVE A FILM NOT EXCEEDING .0005 INCH THICK. (p)
(h) COAT ENTIRE INTERIOR SURFACE WITH ETHYL CELLULOSE LACQUER AFTER HYDROSTATIC TEST. (p)
(k) COAT ENTIRE EXTERIOR SURFACE EXCEPT THREADS, WITH OLIVE DRAB LACQUER ENAMEL, GRADE I OR II. (p)
(L) STAMP "55" IN ⅛ FIGURES .01 MAX DEEP AFTER SATISFACTORILY PASSING HYDROSTATIC TEST.
(m) APPLIES TO UNTHREADED PORTION OF 1.62 +.03 LENGTH.
(72) MAY BE VARIED FOR MANUFACTURE OF HEAD PROVIDED THE SPECIFIED DIMENSIONS ON THE BODY ASSEMBLY ARE MET AFTER HYDROSTATIC TEST.
(p) ALTERNATIVE:- THREADS MAY BE COATED WITH EITHER INTERIOR OR EXTERIOR LACQUER. THICKNESS NOT TO EXCEED .0005 INCH.

SCALE, INCHES, 1/1

JATO, 0.7ES-2650, M3. DETAILS.

HEAT TREATMENT & PROTECTIVE FINISH	CLASS	DIVISION	DRAWING
	82	5	141

PHYSICAL PROPERTIES

DRAWING PERTAINS TO

	WELDED ASSY.	WELDED ASSY.
82-6-24		

ORIGINAL DATE OF DRAWING DEC 7, 1948.

REVISIONS

NO.	DATE	REVISION	BY
1	6-15-49		
2	3-6-50	ECO 16137	MWJ

WEIGHT — DO NOT SCALE — DO APPLY PART NO. (As Specified)

SCALE —

TOLERANCES ON DIMENSIONS (Unless Otherwise Specified)

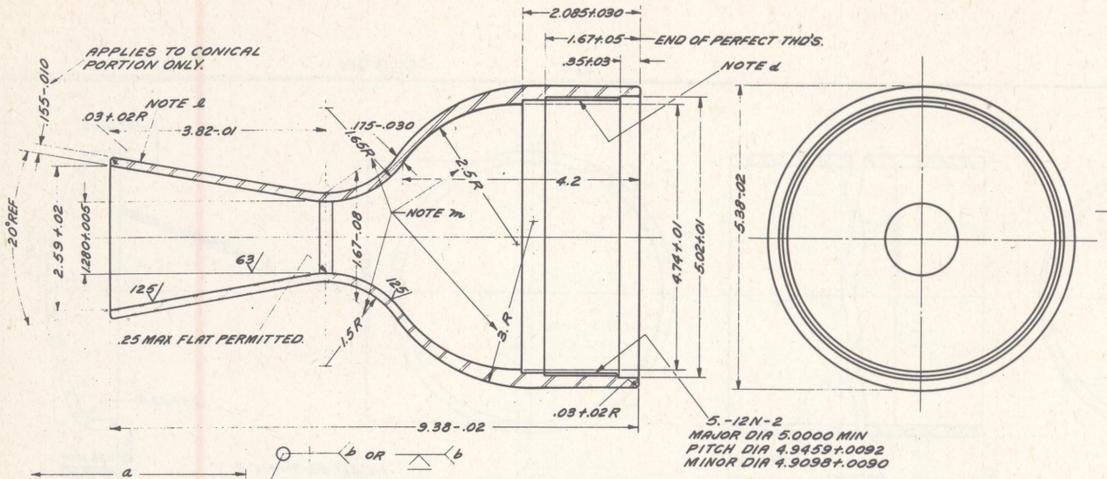
DRAWN A.B.H. — TRACED E.H.T. — CHECKED M.W.C. — ENGR. P.A.D. — APPD. M.W.J. — APPD. [illegible]

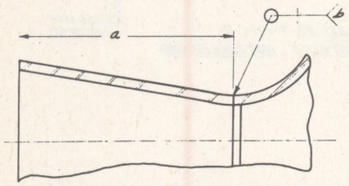
SUBMITTED J.R. Brennan, CHIEF ENGR.

APPROVED BY ORDER OF THE CHIEF, ORDNANCE DEPARTMENT: [signature], Col, ORD DEPT, U.S. ARMY

SIZE D

ORDNANCE DEPT U.S. ARMY

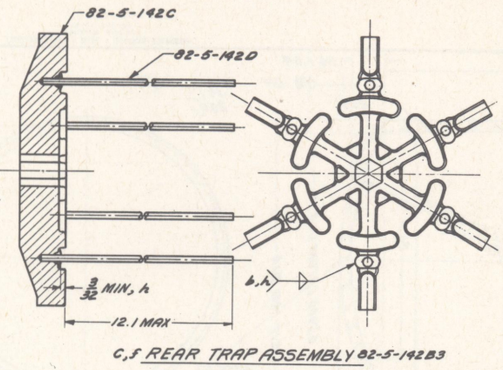




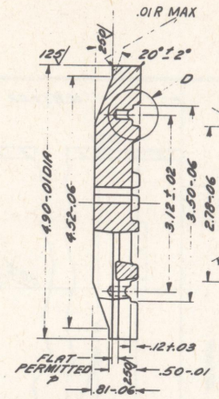
ALTERNATIVE METHOD OF NOZZLE CONSTRUCTION

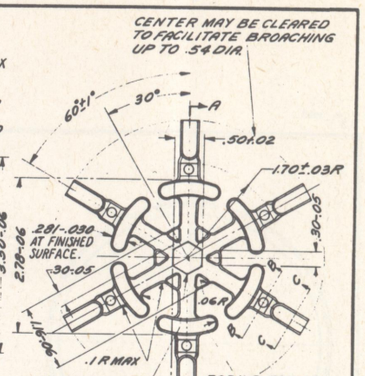
K,C,C,S NOZZLE 82-5-142A3
STEEL, TUBING, WDX 4130, COLD-DRAWN, TYPE I, CLASS A
250 ALL OVER EXCEPT AS NOTED

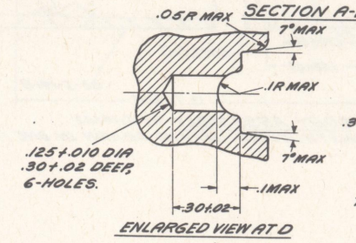
MIN PHYSICAL PROPERTIES
YIELD STRENGTH---125000 PSI
ELONG-------10%



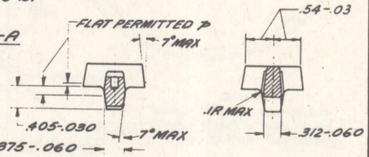
C,S REAR TRAP ASSEMBLY 82-5-142B3



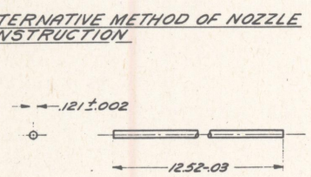




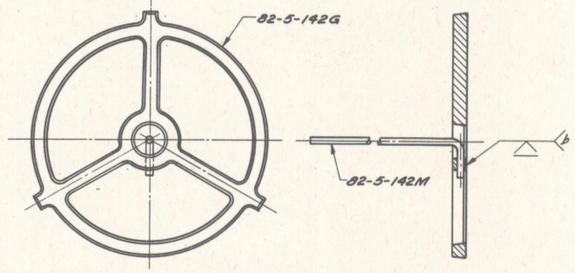
ENLARGED VIEW AT D



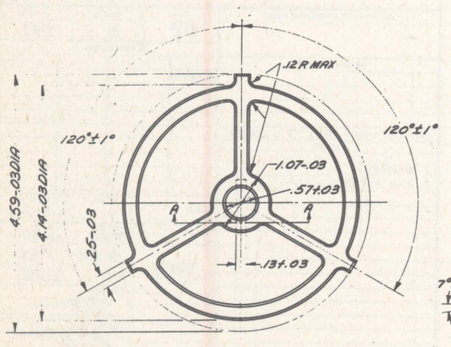
SECTION B-B SECTION C-C

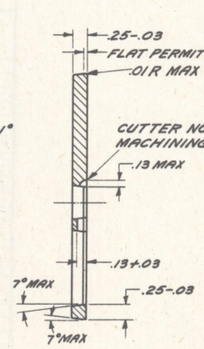


ROD, REAR TRAP 82-5-142D3
STEEL WIRE, WD1020, TYPE I

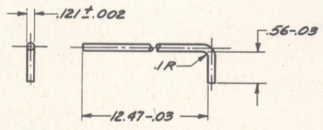


C,S FRONT TRAP ASSEMBLY 82-5-142F3

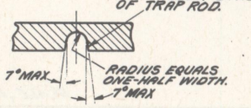




P,P TRAP, FRONT 82-5-142G3
STEEL FORGING, WD1010



ROD, FRONT TRAP 82-5-142M3
STEEL WIRE, WD1010, TYPE I



SECTION A-A

NOTES:-
a- DIMENSION GOVERNED BY MANUFACTURER'S EQUIPMENT.
b- FOR WELDING SYMBOLS SEE LIST OF PARTS.
c- ALL METAL SURFACES SHALL BE CLEANED IN ACCORDANCE WITH GRADE II, SPEC JAN-C-490 BEFORE COATING.
d- COAT THREADS WITH PHENOLIC VARNISH, BAKING (BAKING OF VARNISH OPTIONAL) VARNISH MAY BE THINNED BY USING APPROX. THREE PARTS THINNER TO ONE PART VARNISH, TO GIVE A FILM NOT EXCEEDING .0005 INCH THICK.r
e- COAT ENTIRE EXTERIOR SURFACE WITH OLIVE DRAB LACQUER ENAMEL, GRADE I OR II. r
f- COAT ALL SURFACES WITH ETHYL CELLULOSE LACQUER.
g- COAT ENTIRE INTERIOR SURFACE, EXCEPT THREADS WITH ETHYL CELLULOSE LACQUER.r
h- WELD METAL MUST BE 3/32 MIN BELOW FLUSH OF 82-5-142C.
k- NOZZLE SHALL WITHSTAND AN INTERNAL HYDROSTATIC TEST OF 5500 POUNDS PER SQUARE INCH WITHOUT DISTORTION IN EXCESS OF DRAWING DIMENSIONS.
l- STAMP "S5" IN 1/8 FIGURES .01 MAX. DEEP LONGITUDINALLY, AFTER SATISFACTORILY PASSING HYDROSTATIC TEST.
m- RADII MUST BE CONTROLLED TO PRODUCE .145 MIN WALL THICKNESS AT ANY POINT AND A SMOOTH CONTOUR.
n- 1/32 RADIUS EVERYWHERE UNLESS OTHERWISE SPECIFIED.
p- ALL FLASH MUST BE REMOVED. 7° MAX DRAFT PERMITTED ON ALL UNFINISHED SURFACES.
r- ALTERNATIVE - THREADS MAY BE COATED WITH EITHER INTERIOR OR EXTERIOR LACQUER. THICKNESS NOT TO EXCEED .0005 IN.

SUPERSEDES 82-5-142 WITH CHANGE, MAR 6, 1950.

SYM	DESCRIPTION	DATE	APPROVAL
4	ECO 16137	3-6-50	

REVISIONS

PHYSICAL PROPERTIES: YP, TS, EL 2, RA, BH, Rb

82-6-24 NEXT ASSY USED ON
APPLICATION
DO NOT APPLY PART NO.
DO AS SPECIFIED

UNLESS OTHERWISE SPECIFIED DIMENSIONS ARE IN INCHES
TOLERANCES ON DECIMALS ANGLES FRACTIONS
MATERIAL
HEAT TREATMENT
FINAL PROTECTIVE FINISH

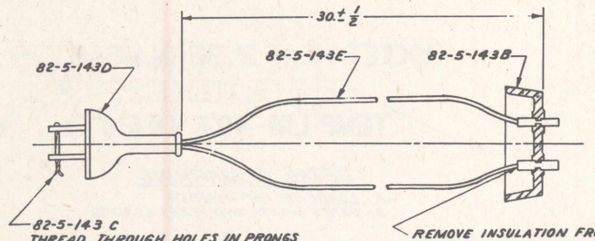
ORIGINAL DATE OF DRAWING DEC 7, 1948
DRAFTSMAN CHECKED
TRACED CHECKED
ENGINEER ENGINEER
SUBMITTED
APPROVED BY ORDER OF THE CHIEF OF ORDNANCE
COL, ORD DEPT

JATO, 0.7 ES, -2650, M3.
DETAILS.
SCALE 1/1 UNIT WT

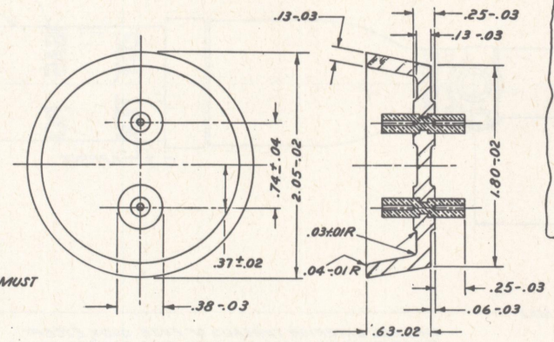
ORDNANCE DEPT
DEPT OF THE ARMY
DWG SIZE E
82-5-142
SHEET OF

ORDNANCE DRAWING - SIZE D - MILITARY

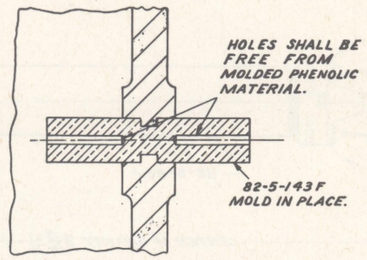
CL & DIV D



IGNITER PLUG ASSEMBLY 82-5-143A



CLOSURE, NOZZLE 82-5-143B
MOLDED PHENOLIC MATERIAL, CLASS 1.

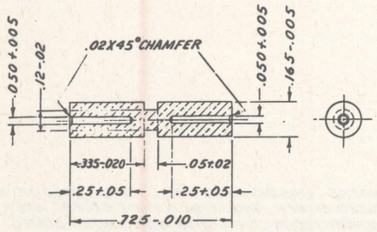


ENLARGED VIEW OF TERMINAL AND CLOSURE

WIRE, SHORTING 82-5-143 C
WIRE, COPPER, SOFT
.0253 ±.0002 DIA X 1 1/2 LONG

PLUG, IGNITER 82-5-143 D
RUBBER BODY
STYLE NO. 432

CABLE, IGNITER 82-5-143E
CABLE, COPPER, AN-20.
32. LONG, APPROX



INSERT, TERMINAL 82-5-143F
COPPER, ROD, CLASS A
FINISH 125

SCALE, INCHES, 1, 2, 4, 5

JATO, O.7ES-2650, M3
DETAILS.

HEAT TREATMENT & PROTECTIVE FINISH	CLASS	DIVISION	DRAWING
	82	5	143

DRAWING PERTAINS TO
82-6-24

PHYSICAL PROPERTIES

ORIGINAL DATE OF DRAWN DECEMBER 7, 1948

REVISIONS
NO. LTR
1 3-6-50 ECO 16274

WEIGHT — DO NOT APPLY PART NO.
SCALE —
TOLERANCES ON DIMENSIONS (Unless otherwise Specified)

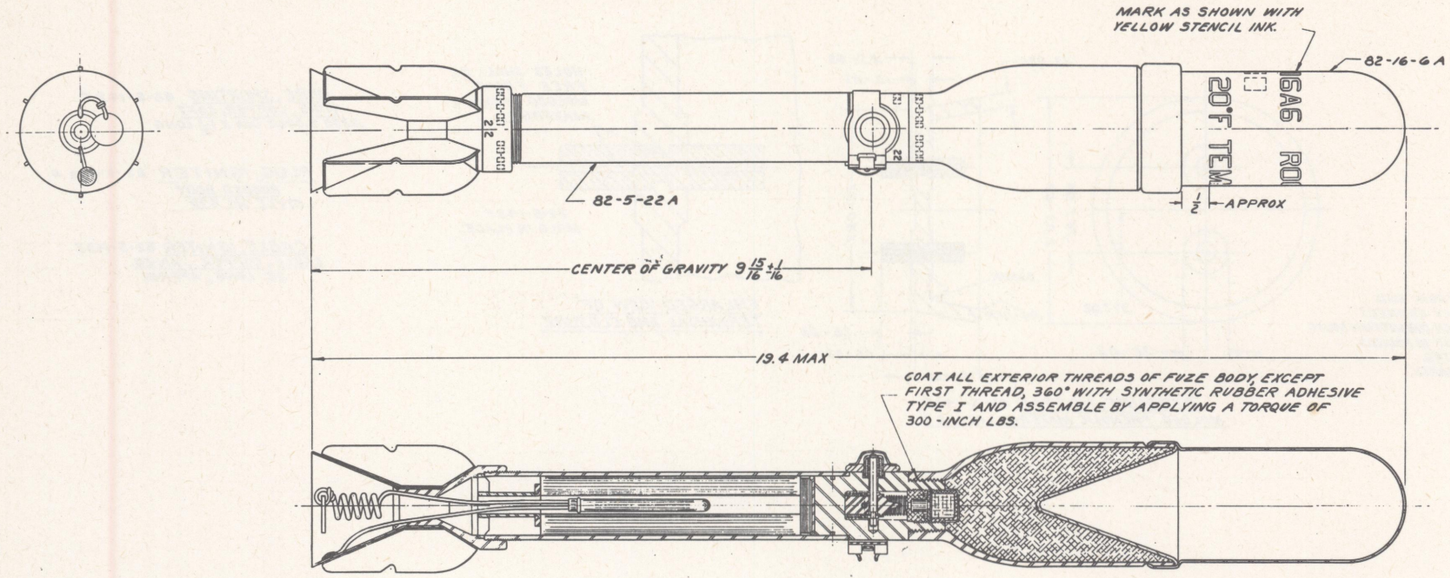
DRAWN	L.M.
CHECKED	R.S.S.
TRACED	
SUBMITTED	O.R. Beeman
EXAMINED	
APPROVED	

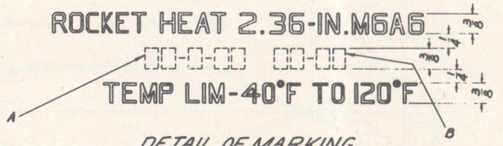
D

ORDNANCE DEPT U.S. ARMY

ORDNANCE DRAWING - SIZE D (ALTERNATIVE)

CL & DIV D





DETAIL OF MARKING

A - LOADER'S LOT NUMBER.
B - DATE (MONTH AND YEAR) LOADED.

LIST OF COMPONENTS, ETC

LINE NO	NAME OF COMPONENT	DRAWING NUMBER OR PIECE MARK	SPEC	APPROX WEIGHT PER UNIT ASSY LBS	REMARKS
1	ASSEMBLY	82-6-3A	AXS-788	3.45±.03	
2	ASSEMBLY, MOTOR & FUZE LOADING	82-5-22A		1.76	
3					
4	BOX, PACKING ASSEMBLY	76-1-754			
5					
6					
7	HEAD LOADING ASSEMBLY	82-16-6A		1.70	
8	IGNITER, ELECTRIC, MIZ, ASSEMBLY	74-7-5	50-49-2		
9					
10	SAFETY WIRE CLAMP ASSEMBLY	82-5-94			
11					
12	ADHESIVE, SYNTHETIC RUBBER, TYPE I		62-4		
13					
14	CONTAINER, FIBER	PIF-18			
15					
16	INK, STENCIL, YELLOW		TT-I-558		
17					
18	LACQUER, ENAMEL, OLIVE DRAB, GRADE I OR II		JAN-L-73		(b)
19					
20					
21	PACKING AND MARKING OF BOX	20-4-339			
22	PACKING AND MARKING OF CONTAINER	PIF-21			
23					
24					

(a) ALTERNATIVE MATERIALS ARE INTENDED TO BE USED ONLY WHEN PRESCRIBED MATERIALS ARE NOT AVAILABLE.
(b) ALTERNATIVE MATERIAL :-(a) ENAMEL, OLIVE DRAB, GRADE I OR II, SPEC JAN-E-74.

SUPERSEDES 82-6-3 WITH CHANGE APRIL 29, 1949

ASSEMBLY 82-6-3 A15

TO BE ACCEPTABLE THIS ASSEMBLY MUST FREELY ENTER ALIGNMENT GAGE. TOUCH UP EXTERIOR SURFACES, WHERE NECESSARY, WITH OLIVE DRAB LACQUER ENAMEL, GRADE I OR II OR OLIVE DRAB ENAMEL, GRADE I OR II.

NOTICE:- THIS DRAWING SHALL NOT BE USED OR REPRODUCED EITHER WHOLLY OR IN PART EXCEPT WHEN AUTHORIZED IN CONNECTION WITH UNITED STATES GOVERNMENT PROCUREMENT.

ROCKET, HE, AT, 2.36 INCH, M6A6
ASSEMBLY

HEAT TREATMENT & PROTECTIVE FINISH

PHYSICAL PROPERTIES

ORIGINAL DATE OF DRAWING JULY 15, 1942

REVISIONS

14	4-29-49	
15	9-19-49	
16	8-29-50	ECO-16385

CLASS 82 | D.F. NO. 6 | DRAWING NO. 3

DRAWING PERTAINS TO:

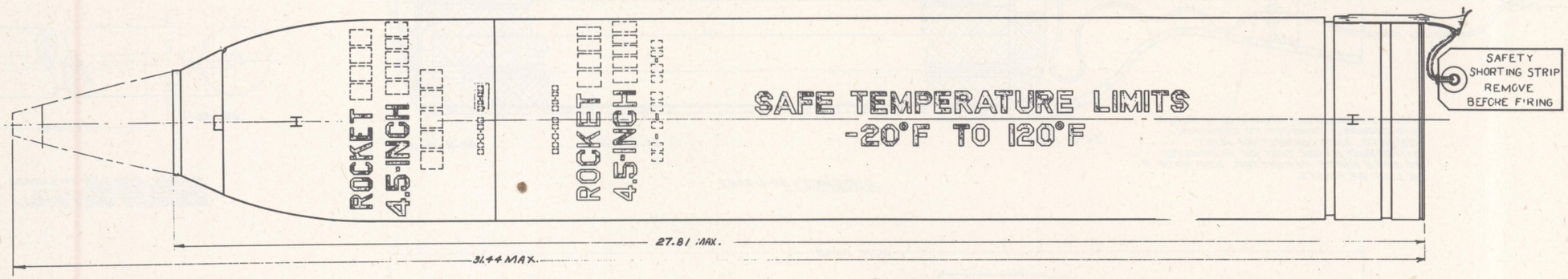
WEIGHT | SCALE | TOLERANCES ON DIMENSIONS

ECO NO. 00 | APPLY PART NO. (As Specified)

C.O.F. | C.O.F. | SUBMITTED | ENGINEER | APPROVED

D

ORDNANCE DEPT U.S. ARMY



ASSEMBLY 82-6-9A6

LIST OF COMPONENTS ETC.

LINE NO	NAME OF COMPONENT	DRAWING NUMBER OR PIECEMARK	SPEC. NUMBER	APPROX WEIGHT PER UNIT ASS'Y (POUNDS)	REMARKS
1	ASSEMBLY (LESS FUZE)	82-6-9	AXS-1421	38.00	
2	FIBER CONTAINER, M205A1	P-80708			
3	LOADING ASS'Y AND MARKING DIAGRAM	82-16-16			
4					
5					
6	FUZE, P.D., M81 (.05 SEC. DELAY)	73-2-251		2.11	(A)
7	FUZE, VT, M402				
8	FUZE, VT, MK173, MOD.5				
9	FUZE, DUMMY, M173	72-5-11		2.11	(B)
10					
11	MARKING DIAGRAM FOR BOXES	20-4-613			
12					
13					
14	PACKING BOX	P-80714	50-62-4		
15					
16	SHELL LOADING ASSEMBLY AND MARKING DIAGRAM	82-16-21			
17					
18					
19					

(A) - FOR ALTERNATIVE FUZE, SEE 6A-2712.
(B) USE ONLY WITH ROCKET, PRACTICE, M17A2 OR M17A1.

[redacted]

THIS DRAWING APPLIES TO THE FOLLOWING ROCKETS:-
ROCKET, HE, 4.5 INCH, M16A2.
ROCKET, PRACTICE, 4.5 INCH, M17A2.
ROCKET, HE, 4.5 INCH, M16A1.
ROCKET, PRACTICE, 4.5 INCH, M17A1.

DEPT. OF ARMY, ORD. DEPT., PICATINNY ARSENAL
CLASSIFICATION CANCELLED
BY AUTHORITY OF THE CHIEF OF ORDNANCE
E. J. MESSLEY, CAPT., O. D. SECURITY OFFICER
DATE 2-14-50

INCHES 0 1 2 3 4 5 6 7 8 9 10 11

ROCKET, 4.5 INCH, ASSEMBLY (LESS FUZE)

SEPTEMBER 6, 1944

CLASS	DIVISION	DRAWING	FILE
82	6	9	

REVISIONS

1	10-2-44
2	11-7-44
3	1-27-45
4	3-15-45
5	8-15-45
6	2-14-50

TOLERANCE ON DIMENSIONS NOT OTHERWISE SPECIFIED
DECIMAL ±
FRACTIONAL ±
ANGULAR ±

D'FTSMAN F.G. TRACED G.A.D. ENGINEER
CHECKER B. E.E.S. ENGINEER

DRG. PERTAINS TO

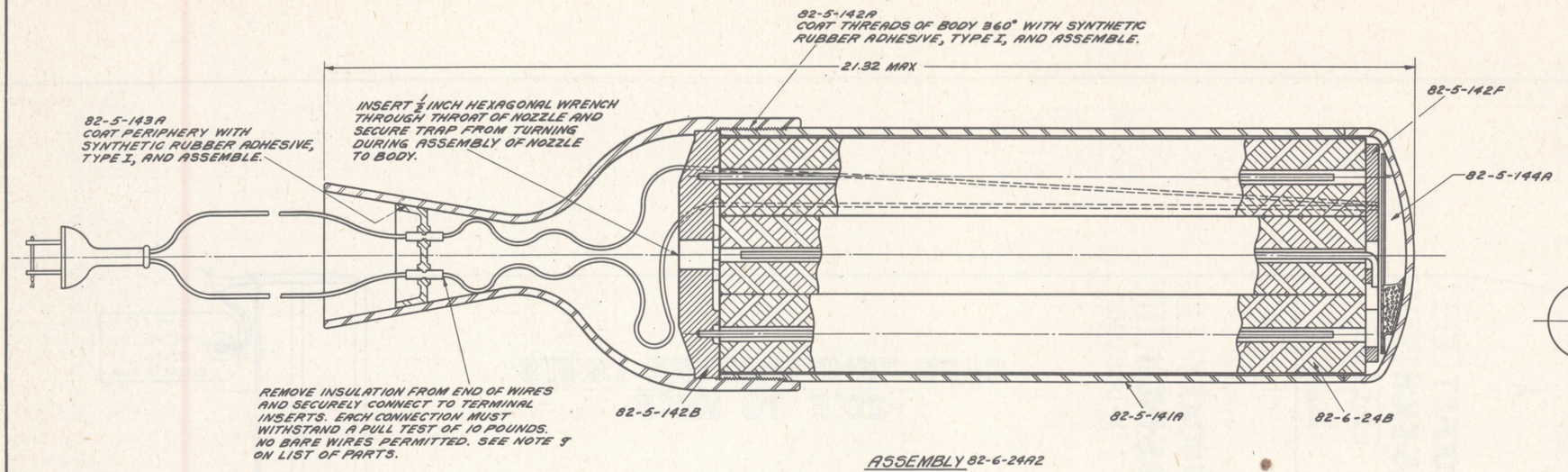
SUBMITTED:- G.W. Botts ENGR. ORD. DEPT., U.S.A.
EXAMINED:- H.B. Jones Jr. MAJOR ORD. DEPT., U.S.A.
APPROVED BY ORDER OF THE CHIEF OF ORDNANCE:- G.W. Drucker COL., ORD. DEPT., U.S.A.

D

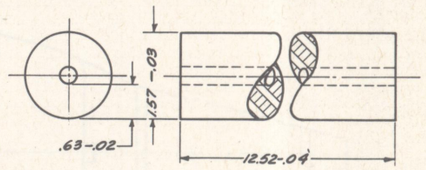
ORDNANCE DEPT. U.S.A.

CLASS & DIV. E

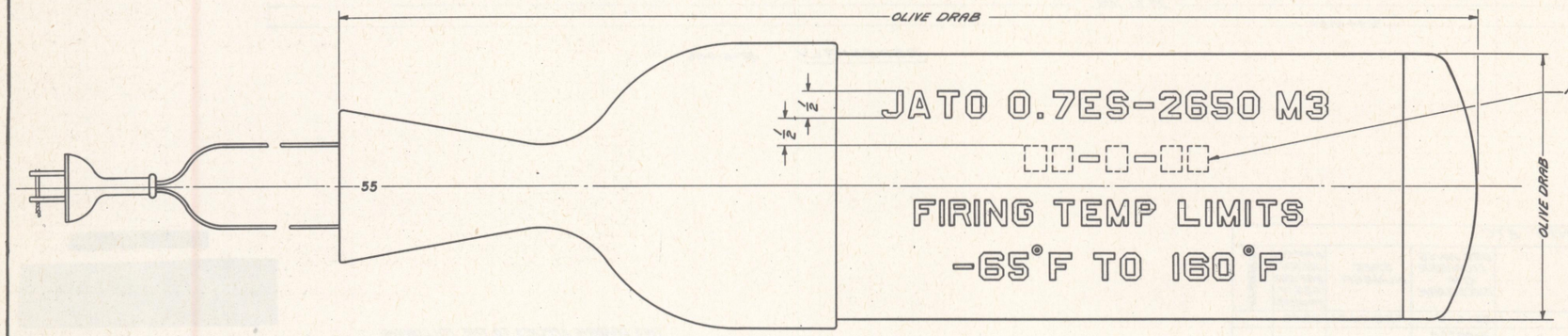
LINE NO.	LIST OF DRAWINGS	DRAWING NUMBER
1	ASSEMBLY	82-6-24
2	LIST OF PARTS AND LIST OF SPECS	82-6-24A
3	DETAILS	82-5-141
4	DETAILS	82-5-142
5	DETAILS	82-5-143
6	IGNITER, JATO, M21	82-5-144
7	IGNITER, JATO, M21, LIST OF PARTS & SPECS	82-5-144A
8	BOX, PACKING	
9		
10		



ASSEMBLY 82-6-24A2



GRAIN, POWDER 82-6-24B2
POWDER, PROPELLENT, T6.
DIMENSIONS APPLY AT 70°F



LIST OF COMPONENTS, ETC

LINE NO.	NAME OF COMPONENT	DRAWING NUMBER OR PIECE MARK	SPEC	APPROX WEIGHT PER UNIT ASSY LB	REMARKS
1	ASSEMBLY	82-6-24A		27.1	
2					
3	BOX, PACKING				
4	GRAIN, POWDER	82-6-24B	PD-4	1.31	7-REQD
5					
6					
7	IGNITER, JATO, M21	82-5-144	50-49-4	.14	
8					
9					
10	INERT PARTS			17.77	
11					
12					

MARKING DIAGRAM

NOTES:-
A- RETOUCH SURFACES, WHERE PREVIOUS COATING IS DAMAGED, WITH OLIVE DRAB LACQUER ENAMEL, GRADE I OR II.
B- MARK WITH YELLOW STENCIL INK.
C- INSERT LOT NUMBER.

SYM	DESCRIPTION	DATE	APPROVAL
2	ECO 16137	3-6-50	

REVISIONS

SUPERSEDES 82-6-24 WITH CHANGE, MAR 6, 1950.

0 1 2 3 4 5 6 7 8 9 10 11 IN.

PHYSICAL PROPERTIES: YP, TS, EL 2", RA, BH, RH

UNLESS OTHERWISE SPECIFIED DIMENSIONS ARE IN INCHES
TOLERANCES ON DECIMALS
ANGLES FRACTIONS
MATERIAL
HEAT TREATMENT
NEXT ASSY USED ON
APPLICATION
DO NOT APPLY PART NO.
DO AS SPECIFIED
FINAL PROTECTIVE FINISH

ORIGINAL DATE OF DRAWING DEC 7, 1948
DRAFTSMAN [illegible] CHECKER [illegible]
TRACER [illegible] CHECKER [illegible]
ENGINEER [illegible] ENGINEER [illegible]
SUBMITTED DATE
C. R. Sutton COL ORD DEPT
APPROVED BY CHIEF OF ORDNANCE
[illegible] COL ORD DEPT

JATO, 0.7ES-2650, M3. ASSEMBLY AND DETAILS.

SCALE 1/1 UNIT WT

ORDNANCE DEPT
DEPT OF THE ARMY
DWG SIZE E 82-6-24
SHEET OF

1040

ORDNANCE DRAWING - SIZE D (ALTERNATIVE)

CL & DIV D

LIST OF PARTS

LINE NO.	NAME OF PART	NUMBER REQ'D PER COMPONENT	PIECE MARK	MATERIAL: SIZE OR FORM	MATERIAL: KIND	MATERIAL: GRADE	MATERIAL: SPEC NUMBER	APPROXIMATE UNIT WEIGHT (POUNDS)	APPROX GROSS WT OF RAW STOCK PER 1000 ASSEMBLIES		REMARKS
1	ASSEMBLY		82-6-24A					27.1			(g)
2											
3	BODY ASSEMBLY		82-5-141A					10.7			(e)
4	IGNITER PLUG ASSEMBLY		82-5-143A					.12			(g)
5	FRONT TRAP ASSEMBLY		82-5-142F					.46			(e)
6	IGNITER, JATO, M21		82-5-144A				50-49-4	.14			
7	REAR TRAP ASSEMBLY		82-5-142B					1.06			(e)
8											
9											
10											
11											
12	BODY	1	82-5-141B	TUBING	STEEL, TYPE I, CLASS A	WDX4130	57-180				(d)
13											
14											
15	CABLE, IGNITER	2	82-5-143E	CABLE, AN-20	COPPER, INSULATED		AN-J-C-48	.02			
16	PLUG, IGNITER	1	82-5-143D	MOLDED	RUBBER BODY, STYLE NO. 432		W-R-151	.06			
17	GRAIN, POWDER	7	82-6-24B	EXTRUDED	POWDER, PROPELLENT, T6		PD-4	1.31			
18	CLOSURE, NOZZLE	1	82-5-143B	MOLDED	PHENOLIC MATERIAL	CLASS 1	AXS-815	.04			
19											
20											
21											
22	HEAD	1	82-5-141C	STRIP	STEEL	WD4130	57-136				(d)
23											
24	INSERT, TERMINAL	2	82-5-143F	ROD	COPPER	CLASS A	QQ-C-501				
25	NOZZLE	1	82-5-142A	TUBING	STEEL, TYPE I, CLASS A	WDX4130	57-180	5.35			(e)(c)(d)
26											
27											
28	TRAP, FRONT	1	82-5-142G	FORGING	STEEL	WD1010 OR 1020	57-105	.42			(K)(a)(h)
29	ROD, FRONT TRAP	1	82-5-142M	WIRE	STEEL, TYPE I	WD1020	48-5	.04			
30	ROD, REAR TRAP	6	82-5-142D	WIRE	STEEL, TYPE I	WD1020	48-5	.04			
31											
32											
33											
34	TRAP, REAR	1	82-5-142C	FORGING	STEEL	WD1010 OR 1020	57-105	.82			(K)(h)
35											
36	WIRE, SHORTING	1	82-5-143C	WIRE	COPPER	SOFT	QQ-W-341				
37											
38											
39					ADHESIVE, SYNTHETIC RUBBER	TYPE I	62-4				
40											
41					INK, STENCIL, YELLOW		TT-I-558				
42					LACQUER ENAMEL, OLIVE DRAB	I OR II	JAN-L-73				(b)
43					LACQUER, ETHYL CELLULOSE		3-198				
44											
45					VARNISH, PHENOLIC, BAKING		3-221				

(a) ALTERNATIVE MATERIAL:-(m) PEARLITIC MALLEABLE IRON CASTING, CLASS D, SPEC AXS-623.
(b) ALTERNATIVE MATERIAL-(d) OLIVE DRAB ENAMEL, GRADE I OR II, SPEC JAN-E-74
(c) ALTERNATIVE MATERIAL:-(d) STEEL, FORGING, WD1045, SPEC 57-105
(d) SPECIFICATION APPLIES, EXCEPT FOR MIN. PHYSICAL PROPERTIES.
(e) FOR WELDING SYMBOLS SEE JAN-STD-19.

(g) CRIMP WITH AIRCRAFT-MARINE PRODUCTS INC (HARRISBURG, PA) TOOL NO. 49217 OR APPROVED SUBSTANTIAL EQUAL. APPLIES TO 82-6-24)
(h) ALTERNATIVE MATERIAL:-(d) STEEL, STRIP, WD 1010, SPEC 57-136.
(K) ALTERNATIVE MATERIAL:-(m) STEEL, CASTING, CLASS I, SPEC QQ-S-681.
(d) ALTERNATIVE MATERIALS ARE INTENDED TO BE USED ONLY WHEN PRESCRIBED MATERIALS ARE NOT AVAILABLE.
(m) ALTERNATIVE CASTINGS TO BE USED ONLY WHEN SPECIFICALLY AUTHORIZED BY THE CHIEF OF ORDNANCE.

LIST OF SPECIFICATIONS

LINE NO.	LIST OF SPECIFICATIONS	SPEC NUMBER *	REQUIRED BY
1	AMMUNITION, EXCEPT SMALL ARMS AMMUNITION, GENERAL SPEC FOR	50-0-1	DWG 82-6-24
2	ADHESIVE, SYNTHETIC RUBBER	62-4	DWG 82-6-24
3	CABLE; ELECTRIC, LOW-TENSION, AIRCRAFT	AN-J-C-48	DWG 82-5-143
4			
5	CLEANING AND PREPARATION OF FERROUS METAL, ETC	JAN-C-490	DWG 82-5-141
6	COPPER; BARS, PLATES, RODS, SHAPES, SHEETS AND STRIPS	QQ-C-501	DWG 82-5-143
7	ENAMEL, LUSTRELESS, QUICK-DRYING	JAN-E-74	DWG 82-6-24A
8			
9			
10	FORGINGS, LIGHT, DROP AND MISCELLANEOUS: STEEL, CARBON AND ALLOY	57-105	DWG 82-6-24A
11	IGNITER, M21	50-49-4	DWG 82-6-24A
12	INK, STENCIL; OPAQUE, FOR MARKING NON-POROUS SURFACES ETC	TT-I-558	DWG 82-6-24
13	IRON, MALLEABLE; PEARLITIC, CASTINGS	AXS-623	DWG 82-6-24A
14	JATO, 0.7ES-2650, M3, PARTS FOR		DWG 82-6-24
15	JATO, 0.7ES-2650, M3, LOADING, ASSEMBLING AND PACKING		DWG 82-6-24
16	LACQUER, ENAMEL, LUSTRELESS	JAN-L-73	DWG 82-5-141
17	LACQUER, ETHYL CELLULOSE, SPECIAL (FOR ORDNANCE MATERIEL)	3-198	DWG 82-5-142
18			
19	METALS; GENERAL SPECIFICATION FOR INSPECTION OF	QQ-M-151	57-180
20			
21	PAINT, VARNISH, LACQUER AND RELATED MATERIALS; METHODS ETC.	TT-P-141	JAN-L-73
22	PHENOLIC MATERIAL, MOLDED	AXS-815	DWG 82-5-143
23	PLASTICS, ORGANIC; GENERAL SPECIFICATIONS, TEST METHODS	L-P-406	AXS-815
24	POWDER, PROPELLENT, T-6	PD-4	DWG 82-6-24
25			
26			
27	RECEPTACLES (CONVENIENCE-OUTLETS), ADAPTERS, ETC	W-R-151	DWG 82-5-143
28			
29	STANDARD SPECIFICATION FOR MARKING SHIPMENTS BY ETC	100-2	DWG 82-6-24
30			
31	STEEL, CARBON AND ALLOY; SHEETS AND STRIPS	57-136	DWG 82-5-141
32	STEEL; CASTINGS	QQ-S-681	DWG 82-5-142
33			
34			
35	TUBING, ROUND, MECHANICAL AND STRUCTURAL; STEEL, CARBON ETC	57-180	DWG 82-5-141
36			
37	VARNISH, PHENOLIC, BAKING	3-221	DWG 82-5-142
38	WELDING SYMBOLS	JAN-STD-19	DWG 82-5-142
39	WIRE; COPPER, SOFT OR ANNEALED	QQ-W-341	DWG 82-5-143
40	WIRE, SOFT IRON AND STEEL, BARE AND COATED	48-5	DWG 82-5-142

* THE SPECIFICATION NUMBERS SHOWN ARE BASIC NUMBERS ONLY. WHEN A SPECIFICATION IS REVISED A LETTER IS AFFIXED TO ITS BASIC NUMBER. SPECIFICATIONS REFERRED TO IN THESE SPECIFICATION AND NOT LISTED HEREIN, SHALL NOT APPLY.

JATO, 0.7ES-2650, M3.
LIST OF PARTS AND LIST OF SPECIFICATIONS.

HEAT TREATMENT & PROTECTIVE FINISH

PHYSICAL PROPERTIES

ORIGINAL DATE OF DRAWING DEC 7, 1948

REVISIONS
1 6-15-49
2 11-3-49
3 3-6-50 ECO 16137 HGW

CLASS	DIVISION	DRAWING
82	6	24A

DRAWING PERTAINS TO
82-6-24

WEIGHT

SCALE —

TOLERANCES OR DIMENSIONS as otherwise specified

DO NOT APPLY PART NO. DO (As Specified)

SUBMITTED D.R. Beeman ORD ENG.

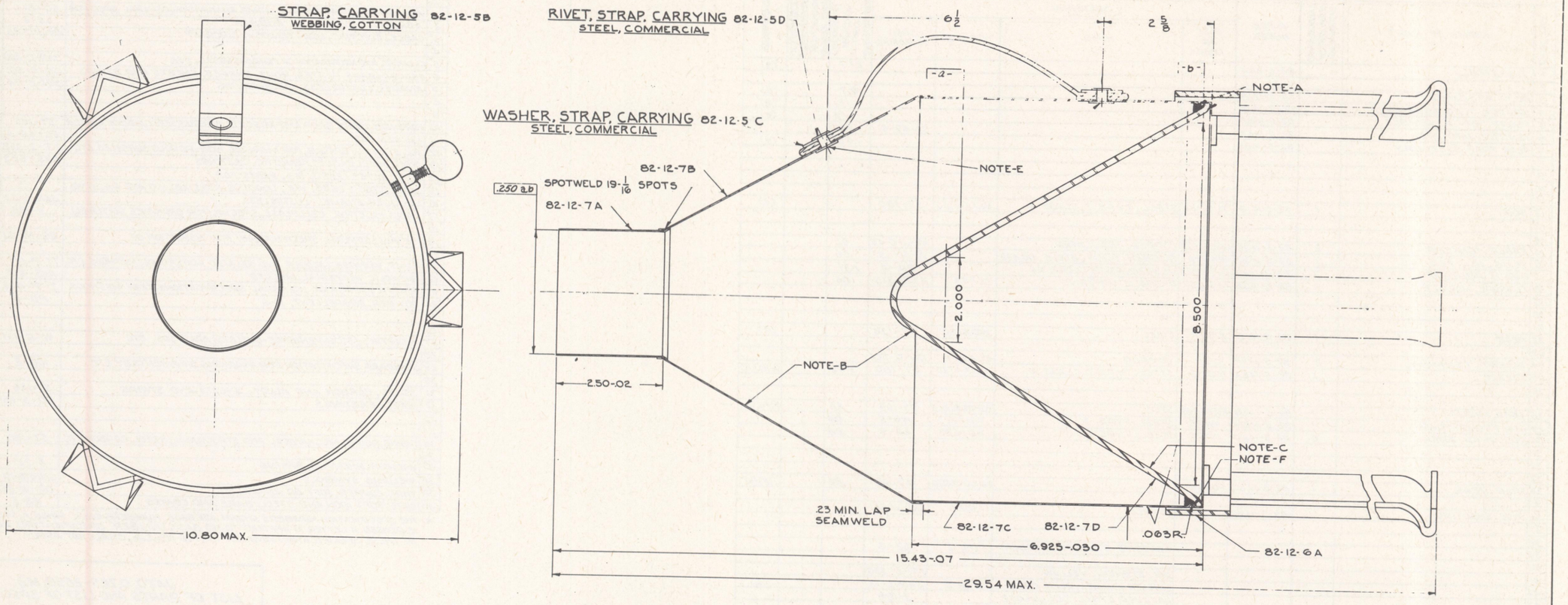
EXAMINED

APPROVED COL.

D

ORDNANCE DEPT U.S. ARMY

94666-A



METAL PARTS ASSEMBLY 82-12-5A2

NOTES:-

A- CONE MUST BE FIRMLY SECURED BY A 360° CRIMP AND BEAD.
B- COAT ALL INTERIOR SURFACES WITH ACID-PROOF BLACK PAINT, TYPE I OR II.
C- COAT ALL EXTERIOR SURFACES NOT PREVIOUSLY PAINTED, INCLUDING CAVITY OF CONE, WITH ONE COAT OF SYNTHETIC LACQUER RESISTING PRIMER FOLLOWED BY ONE COAT OF OLIVE DRAB LACQUER ENAMEL OR OLIVE DRAB ENAMEL.
D- ALLOWABLE ECCENTRICITIES ARE INDICATED THUS .000 a . THE LETTER INDICATES THE DIAMETER WITH WHICH THE ECCENTRICITY IS PERMITTED. ECCENTRICITY = ONE HALF THE DIAL GAGE READING. THE ECCENTRICITY IS TO BE MEASURED BY ROTATING THE ASSEMBLY ABOUT AN AXIS COMMON TO BOTH DIAMETERS (a) & (b).
E- 2-17/64 DIA. HOLES TO BE PUNCHED OR DRILLED AND HANDLE ASSEMBLED BEFORE ASSEMBLING CONE TO BODY.
F- SEALER TO BE NOT MORE THAN 1/2 IN. IN DEPTH AND SEALING MATERIAL IS SUBJECT TO THE APPROVAL OF THE CHIEF OF ORDNANCE.

CLASSIFICATION CHANGED TO UNCLASSIFIED BY AUTHORITY OF O.C.M. 25014 BY LT. COL. [signature] 9-7-44

LINE NO.	LIST OF DRAWINGS	DRAWING NUMBER
1	METAL PARTS ASSEMBLY	82-12-5
2	LIST OF PARTS & LIST OF SPECS	82-12-5A
3	FOR METAL PARTS ASSEMBLY	
4	METAL PARTS DETAILS	82-12-7
5	METAL PARTS DETAILS	82-12-6
6		

CHARGE, SHAPED, 40 LB., M3.
METAL PARTS ASSEMBLY

JULY 10, 1944

REVISIONS	
1	9-7-44
2	5-28-45

DRG. PERTAINS TO	
82-13-2	LOADING ASSEMBLY
82-0-122	ASSEMBLY COMPLETE

D

CLASS	DIVISION	DRAWING	FILE
82	12	5	

TOLERANCE ON DIMENSIONS NOT OTHERWISE SPECIFIED
DECIMAL ±
FRACTIONAL ±
ANGULAR ±

DFTSMAN F.W.K. TRACER 7 pm. ORD INSPECTOR
CHECKER G.L.P. U.R. ENGINEER

SUBMITTED: [signature] PRIN. ENG., ORD DEPT U.S.A.
EXAMINED [signature] LT. COL., ORD DEPT U.S.A.
APPROVED BY ORDER OF THE CHIEF OF ORDNANCE: [signature] COL. ORD DEPT U.S.A.

ORDNANCE DEPT., U.S.A.

LIST OF PARTS

LINE NO.	NAME OF PART	NUMBER REQD PER COMPONENT	PIECE MARK	MATERIAL: SIZE OR FORM	MATERIAL: KIND	MATERIAL: GRADE	MATERIAL: SPEC NUMBER	APPROXIMATE UNIT WEIGHT (POUNDS)	APPROX GROSS WT OF RAW STOCK PER 1000 ASSEMBLIES	REMARKS
1	METAL PARTS ASSEMBLY		82-12-5A					14.19		
2										
3	STAND-OFF FRAME ASSEMBLY		82-12-6A					5.12		
4										
5										
6										
7										
8	BAND, STAND-OFF FRAME	1	82-12-6C	1 1/2 X 1/8 STRIP	STEEL		COMMERCIAL	1.646		
9										
10	CONE	1	82-12-7D	SHEET	STEEL	WD 1010	57-136			
11										
12	CONTAINER	1	82-12-7C	SHEET	STEEL		57-136	1.45		
13	COVER, CONTAINER	1	82-12-7B	SHEET	STEEL		57-136	1.13		
14										
15										
16										
17	LEG, STAND-OFF FRAME	3	82-12-6B	1 X 1 X 1/8 ANGLE	STEEL		COMMERCIAL	1.136		
18										
19										
20										
21	NECK, CONTAINER	1	82-12-7A	TUBING	STEEL	TYPE I OR II, CLASS A	57-180	.31		
22	NUT, BAND, STAND-OFF FRAME	1	82-12-6E		STEEL		COMMERCIAL	.014		
23										
24										
25										
26	RIVET, STRAP, CARRYING	2	82-12-5D	1/4 X 1/2 FLAT HEAD	STEEL		COMMERCIAL	.008		
27										
28										
29										
30	SCREW, THUMB, BAND, STAND-OFF FRAME	1	82-12-6D	1 X 3/8	STEEL OR BRASS		COMMERCIAL	.048		
31	STRAP, CARRYING	1	82-12-5B	1 X 14	WEBBING, COTTON, OLIVE DRAB	TYPE 3 OR 4	6-185	.01		
32										
33										
34										
35	WASHER, STRAP, CARRYING	2	82-12-5C	1 X 1 X 1/16	STEEL		COMMERCIAL	.016		
36										
37										
38										
39					LACQUER ENAMEL, OLIVE DRAB	I	JAN-L-73			(a)
40										
41					PAINT, ACID-PROOF, BLACK	TYPE I OR II	JAN-P-450			
42					PRIMER, SYNTHETIC, LACQUER RESIST.		JAN-P-72			
43										
44					SEALER					(b)
45										

(a) ALTERNATIVE MATERIAL :- ENAMEL LUSTRELESS, QUICK DRYING, SPEC JAN-E-74.
(b) MATERIAL AS AUTHORIZED BY THE OFFICE OF CHIEF OF ORDNANCE.

SUPERSEDES 82-12-5A WITHOUT CHANGE JUNE 10, 1949

LIST OF SPECIFICATIONS

LINE NO.	LIST OF SPECIFICATIONS	SPEC NUMBER *	REQUIRED BY
1	AMMUNITION, EXCEPT SMALL ARMS AMM., GENERAL SPEC FOR	50-0-1	DWG 82-12-5
2	CLEANING & PREPARATION OF METAL SURFACES FOR, ETC	AXS-1245	DWG 82-12-5
3			
4	ENAMEL, LUSTRELESS, QUICK DRYING	JAN-E-74	DWG 82-12-5
5			
6	LACQUER ENAMEL, LUSTRELESS	JAN-L-73	DWG 82-12-5
7			
8			
9	METALS, GENERAL SPECIFICATIONS FOR INSPECTION OF	QQ-M-151	DWG 82-12-5
10			
11			
12	PAINT, ACID-PROOF BLACK, FOR AMMUNITION	JAN-P-450	DWG 82-12-5
13	PAINTS & RELATED MATERIALS, GENERAL SPECS FOR INSP & TEST	3-1	DWG 82-12-5
14	PRIMER, SYNTHETIC LACQUER RESISTING	JAN-P-72	DWG 82-12-5
15			
16			
17	STANDARD SPECIFICATIONS FOR MARKING SHIPMENTS	100-2	DWG 82-0-122
18	STEEL, CARBON AND ALLOY, BARS	QQ-S-671	DWG 82-12-6
19	STEEL, SHEETS AND STRIPS, CARBON & ALLOY	57-136	DWG 82-12-7
20			
21			
22	TUBING, ROUND, MECH. & STRUCT., STEEL, CARBON & ALLOY, SEAMLESS, ETC	57-180	DWG 82-12-7
23			
24			
25	WEBBING, COTTON, NATURAL OR IN COLORS	6-185	DWG 82-12-5
26			
27			

* SPECIFICATION NUMBERS SHOWN ARE BASIC NUMBERS ONLY. WHEN A SPECIFICATION IS REVISED A LETTER IS AFFIXED TO ITS BASIC NUMBER. SPECIFICATIONS REFERRED TO IN THESE SPECIFICATIONS AND NOT LISTED HEREON, SHALL NOT APPLY.

NOTICE :- THIS DRAWING SHALL NOT BE USED NOR REPRODUCED EITHER WHOLLY OR IN PART EXCEPT WHEN AUTHORIZED IN CONNECTION WITH UNITED STATES GOVERNMENT PROCUREMENT.

CHARGE, SHAPED, 40 LB, M3
METAL PARTS ASSEMBLY
LIST OF PARTS & LIST OF SPECIFICATIONS

JULY 10, 1944

REVISIONS
2 5-28-45
3 6-10-49

DRG. PERTAINS TO
82-12-5
82-13-2
82-0-122

CLASS	DIVISION	DRAWING	FILE
82	12	5A	

TOLERANCE ON DIMENSIONS NOT OTHERWISE SPECIFIED
DECIMAL ±
FRACTIONAL ±
ANGULAR ±

DFTSMAN	TRACER	ENGINEER
FWK	REG	JHR.
CHECKER		ENGINEER
ACV.	JAT.	JHR.

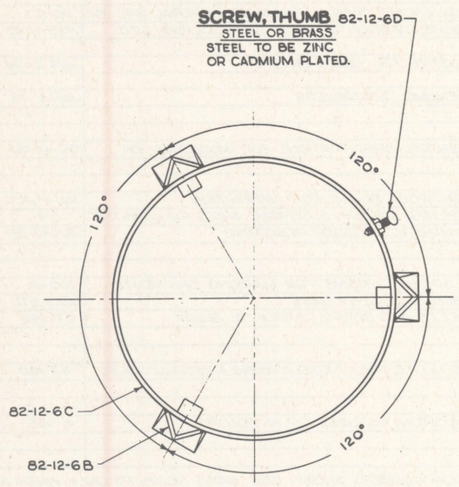
SUBMITTED:-
ORD. ENG., ORD DEPT., U. S. A.

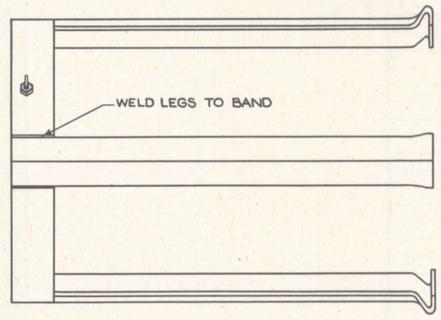
EXAMINED:-
COL., ORD. DEPT., U. S. A.

APPROVED BY ORDER OF THE CHIEF OF ORDNANCE:-
COL., ORD. DEPT., U. S. A.

D

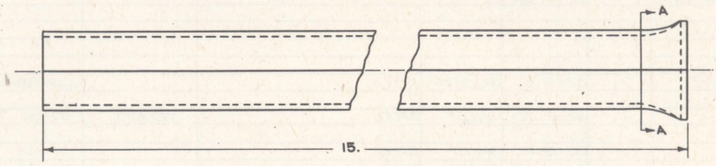
ORDNANCE DEPT., U. S. A.

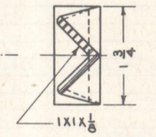




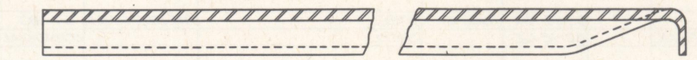
STAND-OFF FRAME ASSEMBLY 82-12-6A

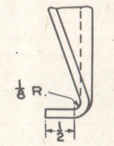
END OF ANGLE IS FLATTENED AND BENT AS SHOWN IN DETAIL, TO FORM FEET.





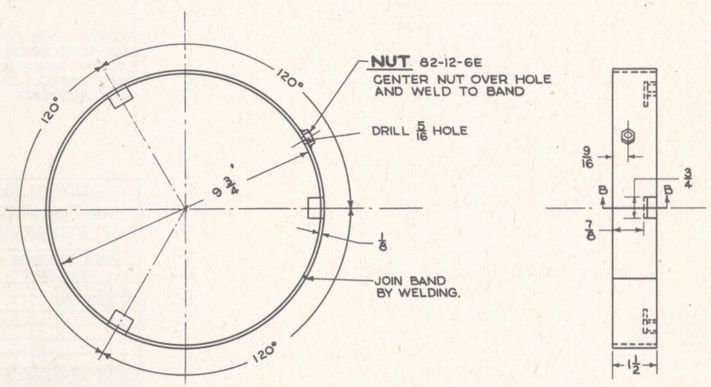
SECTION A-A





FOOT DETAIL

LEG, STAND-OFF FRAME 82-12-6B
STEEL, ANGLE (1X1X⅛) COMMERCIAL



BAND, STAND-OFF FRAME 82-12-6C
STEEL, COMMERCIAL

NOTE:-
A- COAT ALL SURFACES WITH ONE COAT OF SYNTHETIC LACQUER RESISTING PRIMER, FOLLOWED BY ONE COAT OF OLIVE DRAB LACQUER, ENAMEL OR OLIVE DRAB ENAMEL.



SECTION B-B

NOTE:-
REMOVE ALL BURRS.

CLASSIFICATION CHANGED TO UNCLASSIED BY AUTHORITY OF O.C.M. 25014 BY LT. COL. [signature] 9-7-44

[redacted]

SCALE, INCHES, 1/1, 1/2

CHARGE, SHAPED, 40LB., M3.
METAL PARTS DETAILS

JULY 10, 1944

REVISIONS	
1	9-7-44
2	8-15-45

DRG. PERTAINS TO	
82-15-5	MET. PARTS ASS'Y
82-13-2	LOADING ASS'Y
82-0-122	ASS'Y COMPL.

CLASS	DIVISION	DRAWING	FILE
82	12	6	

TOLERANCE ON DIMENSIONS NOT OTHERWISE SPECIFIED
DECIMAL ±
FRACTIONAL ±
ANGULAR ±

D'FTSMAN	TRACER	SRG. ENGINEER
W.A.A.	G.E.D.F.	A.A.T.
CHECKER	G.L.P.	ENGINEER

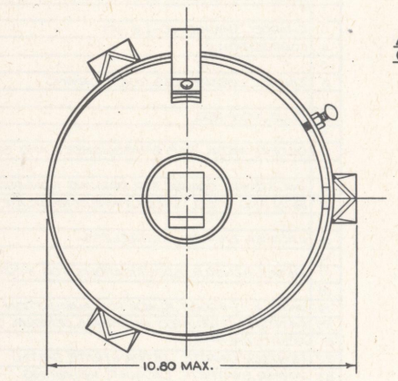
SUBMITTED: [signature]
PRINCIPAL ENG. ORD. DEPT. U.S.A.

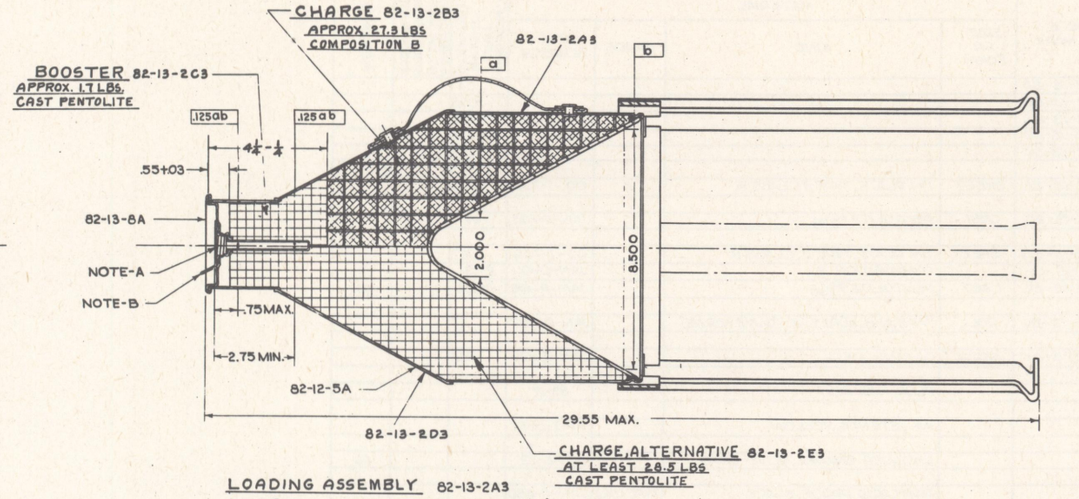
EXAMINED: [signature]
LT. COL. ORD. DEPT. U.S.A.

APPROVED BY ORDER OF THE CHIEF OF ORDNANCE: [signature]
COL. ORD. DEPT. U.S.A.

D

ORDNANCE DEPT., U.S.A.



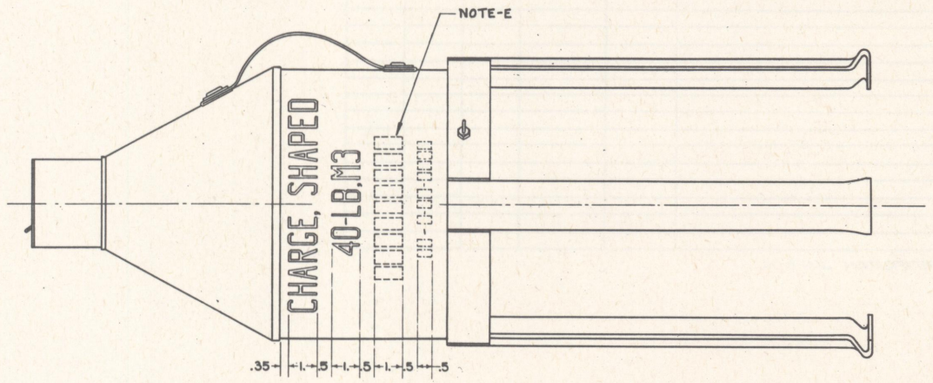


LOADING ASSEMBLY 82-13-2A3
LOADING ASSEMBLY(ALTERNATIVE) 82-13-2D3

NOTES:-
A AFTER PRESSING IN CLOSING CAP ASSEMBLY:- DETONATOR WELL SHALL RECEIVE A PLUG GAGE .280 MINIMUM DIAMETER AND 2.86 MINIMUM LENGTH. DETONATOR SEAT THREADS SHALL BE GAGED WITH A PLUG THREAD GAGE. A THIN FILM OF PAINT ON THREADS ALLOWED PROVIDED THE THREAD GAGE ENTERS FREELY.
B- REPLACE PROTECTIVE TAPE AFTER GAGING.
C- RETOUCH THE SURFACE WHERE PREVIOUS COATING IS DAMAGED WITH OLIVE DRAB LACQUER ENAMEL OR OLIVE DRAB ENAMEL.
D- MARK WITH YELLOW MARKING INK.
E- LOADING CONTRACTOR TO MARK DESIGNATION, LOT NUMBER, LOADER'S INITIALS OR SYMBOL, AND YEAR OF LOADING AS SHOWN.

CHARGE SHAPED
40-LB, M3
COMP. B OR PENTOLITE AS APPLICABLE
LOT NUMBER: 00-0-00 — 1 YEAR LOADED
(INCLUDING INITIALS OR SYMBOL OF LOADER)

F- ALLOWABLE ECCENTRICITY IS INDICATED THUS ⌀a⌀b, (THE LETTER SPECIFIES THE DIAMETER WITH WHICH THE ECCENTRICITY IS PERMITTED.) THE ECCENTRICITY IS TO BE GAGED SIMULTANEOUSLY IN THE REGIONS INDICATED WHILE ROTATING THE ASSEMBLY ABOUT AN AXIS COMMON TO BOTH DIAMETERS a & b. ECC. = ONE-HALF THE DIAL GAGE READING.



MARKING DIAGRAM

CLASSIFICATION CHANGED TO UNCLASSIFIED BY AUTHORITY OF O.C.M. 25014 BY
LT. COL. [illegible] SEPT. 7, 1944

[redacted]

0 2 4 6 8 10 12 14 16 18 20 22 INCHES

LINE NO	LIST OF DRAWINGS	DRAWING NUMBER
1	LOADING ASSEMBLY AND	
2	MARKING DIAGRAM	82-13-2
3	LIST OF PARTS AND LIST OF	
4	SPECS. FOR LOADING ASS'Y.	82-13-2A
5	METAL PARTS ASSEMBLY	82-12-5
6	LOADING DETAILS	82-13-8

CHARGE, SHAPED, 40-LB, M3. LOADING ASSEMBLY AND MARKING DIAGRAM.

JULY 10, 1944.

REVISIONS			
1	9-7-44		
2	5-28-45		
3	8-15-45		

CLASS	DIVISION	DRAWING	FILE
82	13	2	

TOLERANCE ON DIMENSIONS NOT OTHERWISE SPECIFIED
DECIMAL ±
FRACTIONAL ±
ANGULAR ±

DRG. PERTAINS TO	
82-0-122	ASS'Y. COMPLETE

D'TSMAN	TRACER	SRD. ENGINEER
W.A.A.	G.E.D.F.	A.A.T.
CHECKER	G.L.P. H.P.	ENGINEER

SUBMITTED: [signature] PRINCIPAL ENG. ORD. DEPT. U.S.A.
EXAMINED: [signature] LT. COL., ORD. DEPT., U.S.A.
APPROVED BY ORDER OF THE CHIEF OF ORDNANCE: [signature] COL., ORD. DEPT., U.S.A.

D

ORDNANCE DEPT., U.S.A.

LIST OF PARTS

LINE NO.	NAME OF PART	NUMBER REQ'D PER COMPONENT	PIECE MARK	MATERIAL: SIZE OR FORM	MATERIAL: KIND	MATERIAL: GRADE	MATERIAL: SPEC NUMBER	APPROXIMATE UNIT WEIGHT (POUNDS)	APPROX GROSS WT OF RAW STOCK PER 100 ASSEMBLIES		REMARKS
1	CLOSING CAP ASSEMBLY	1	82-13-8A					.04			
2	DETONATOR WELL ASSEMBLY	1	82-13-8B					.035			
3	LOADING ASSEMBLY		82-13-2A				50-23-1	43.48			
4	LOADING ASSEMBLY (ALTERNATIVE)		82-13-2D				50-23-1	43.23			
5	METAL PARTS ASSEMBLY	1	82-12-5A					14.19			
6											
7	ADAPTER, WELL, DETONATOR	1	82-13-8E	SHEET	TIN PLATE, TYPE II, CLASS B	2	QQ-T-706	.004			
8											
9	BOOSTER	1	82-13-2C	CAST	PENTOLITE 50/50		JAN-P-408	1.7			(b)
10											
11	CAP, CLOSING	1	82-13-8D	SHEET	TIN PLATE, TYPE II, CLASS B	2	QQ-T-706	.027			
12	CHARGE	1	82-13-2B		COMPOSITION B		JAN-C-401	27.3			
13	CHARGE (ALTERNATIVE)		82-13-2E	CAST	PENTOLITE 50/50		JAN-P-408	29.25			(b)
14											
15	TAPE, PROTECTOR	1	82-13-8C	ROLL	TAPE, N-H, ADHESIVE (OLIVE-DRAB)		JAN-P-127				
16											
17	WELL, DETONATOR	1	82-13-8F	STRIP	GILDING METAL		JAN-G-439	.008			
18											
19					FLUX, NON-ACID		83-12				
20											
21					INK, STENCIL, YELLOW		TT-I-558				
22							*				
23					LACQUER ENAMEL, OLIVE-DRAB		JAN-L-73				(a)
24											
25					PAINT, ACID PROOF, BLACK	TYPE I OR II	JAN-P-450				
26					PRIMER, SYNTHETIC LACQUER RESISTING		JAN-P-72				
27											
28					SOLDER, TIN-LEAD	CLASS A	QQ-S-571				
29											
30											
31											
32											
33											
34											
35											
36											
37											
38											
39											
40											
41											
42											
43											
44											

(a) ALTERNATIVE MATERIAL:- ENAMEL, OLIVE DRAB, GRADE I, SPECIFICATION JAN-E-74.
(b) COMPOSITION OF PENTOLITE 50/50 :-
TNT, GRADE I, SPEC JAN-T-248, 50% ± 2%
PETN, CLASS-C, SPEC JAN-P-387, 50% ± 2%

SUPERSEDES 82-13-2A WITHOUT CHANGE MARCH 9, 1949

LIST OF SPECIFICTIONS

LINE NO.	LIST OF SPECIFICTIONS	SPEC NUMBER *	REQUIRED BY
1	AMMUNITION, EXCEPT SMALL ARMS AMM, GENERAL SPECS FOR	50-0-1	DWG 82-0-122
2			
3	CHARGE, SHAPED, 40-LB, M3	50-23-1	DWG 82-13-2
4	COMPOSITION, B	JAN-C-401	DWG 82-13-2
5			
6	ENAMEL, LUSTRELESS, QUICK DRYING	JAN-E-74	DWG 82-12-5
7			
8	FLUX, NON-ACID	83-12	DWG 82-13-8
9			
10	GILDING METAL (95/5 BRASS): SHEET AND STRIP	JAN-G-439	DWG 82-13-8
11			
12	INK, STENCIL; OPAQUE, FOR MARKING NON-POROUS SURFACES, ETC	TT-I-558	DWG 82-13-2
13	IRON AND STEEL; SHEET, TINNED (TIN PLATE)	QQ-T-706	DWG 82-13-8
14			
15	LACQUER ENAMEL, LUSTRELESS	JAN-L-73	DWG 82-12-5
16			
17	METALS, GENERAL SPECIFICATIONS FOR INSPECTION AND TESTS	QQ-M-151	DWG 82-12-5
18			
19	PAINT, ACID-PROOF, BLACK FOR AMMUNITION	JAN-P-450	DWG 82-13-8
20	PAINTS AND RELATED MATERIALS, GENERAL SPEC FOR INSP AND TESTS	3-1	DWG 82-12-5
21	PENTOLITE 50/50	JAN-P-408	DWG 82-13-2
22	PENTAERYTHRITE TETRANITRATE (PETN)	JAN-P-387	DWG 82-13-2
23	PRIMER, SYNTHETIC LACQUER RESISTING	JAN-P-72	DWG 82-13-8
24			
25	SOLDER, TIN-LEAD	QQ-S-571	DWG 82-13-8
26	STANDARD SPECIFICATIONS FOR MARKING SHIPMENTS	100-2	DWG 82-0-122
27			
28	TAPE, ADHESIVE, PRESSURE-SENSITIVE, WATER RESISTANT	JAN-P-127	DWG 82-13-8
29	TRINITROTOLUENE (TNT)	JAN-T-248	DWG 82-13-2
30			
31			
32			
33			
34			
35			

* SPECIFICATION NUMBERS SHOWN ARE BASIC ONLY. WHEN A SPECIFICATION IS REVISED A LETTER IS AFFIXED TO ITS BASIC NUMBER. SPECIFICATIONS REFERRED TO IN THESE SPECIFICATIONS AND NOT LISTED HEREON, SHALL NOT APPLY.

NOTICE :- THIS DRAWING SHALL NOT BE USED NOR REPRODUCED EITHER WHOLLY OR IN PART EXCEPT WHEN AUTHORIZED IN CONNECTION WITH UNITED STATES GOVERNMENT PROCUREMENT.

CHARGE, SHAPED, 40-LB, M3. LOADING ASSEMBLY. LIST OF PARTS & LIST OF SPECS.

JULY 10, 1944

REVISIONS	
3	8-15-45
4	3-9-49

DRG. PERTAINS TO	
82-13-2	LOADING ASSEM
82-0-122	ASSEM COMPLETE

CLASS	DIVISION	DRAWING	FILE
82	13	2A	

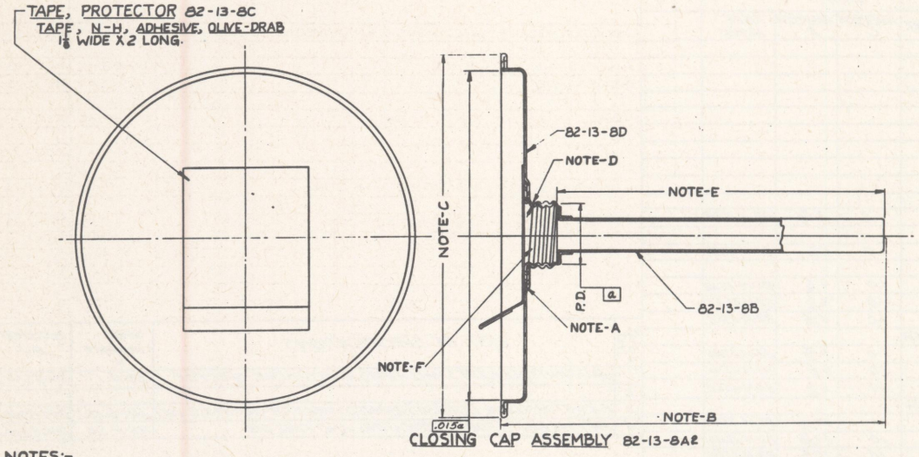
TOLERANCE ON DIMENSIONS NOT OTHERWISE SPECIFIED
DECIMAL ±
FRACTIONAL ±
ANGULAR ±

DFTSMAN WRD | TRACER REC | ENGINEER JM
CHECKER ACJ 1-27-50 | ENGINEER JM

SUBMITTED:- ORD. ENG., ORD. DEPT. U.S.A.
EXAMINED:- COL., ORD. DEPT. U.S.A.
APPROVED BY ORDER OF THE CHIEF OF ORDNANCE:- COL., ORD. DEPT. U.S.A.

D

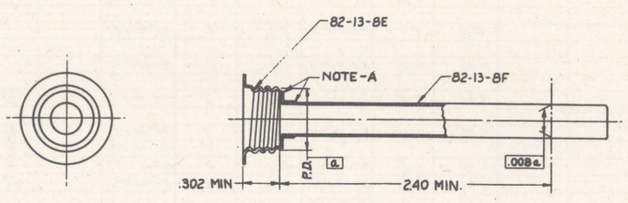
ORDNANCE DEPT. U.S.A.



CLOSING CAP ASSEMBLY 82-13-8A2

NOTES:-

A-SOLDERED CONNECTION. USE NON-ACID FLUX.
B-COAT WITH ACID-PROOF BLACK PAINT TYPE I OR II.
C-COAT UPPER SURFACE OF CAP, WITH ONE COAT OF SYNTHETIC LACQUER RESISTING PRIMER FOLLOWED BY ONE COAT OF OLIVE DRAB ENAMEL. DO NOT PAINT INTERIOR OF DETONATOR WELL ASSEMBLY.
D-NO DENTS PERMITTED IN THREADS. GAGE WITH THREADED PLUG GAGE.
E-NO DENTS PERMITTED IN DETONATOR WELL. CAVITY MUST RECEIVE FULL LENGTH OF A PLUG GAGE .279 MIN. DIA. X 2.86 MIN. LENGTH.
F-ENTIRE CAVITY MUST BE CLEAN AND FREE OF PAINT OR ANY FOREIGN SUBSTANCE. SEAL OPENING WITH PROTECTOR TAPE 82-13-8C AFTER INSPECTION.
G- ALLOWABLE ECCENTRICITIES ARE INDICATED THUS .000a. THE LETTER SPECIFIES THE DIAMETER WITH WHICH THE ECCENTRICITY IS PERMITTED. ECCENTRICITY= ONE HALF THE DIAL GAGE READING.

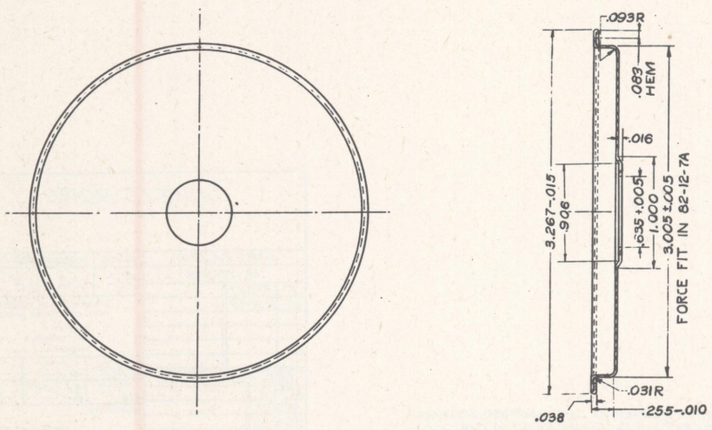


DETONATOR WELL ASSEMBLY 82-13-8B

NOTES:-

A- SOLDERED CONNECTIONS. USE NON-ACID FLUX.
B- ALLOWABLE ECCENTRICITIES ARE INDICATED THUS .000a. THE LETTER SPECIFIES THE DIAMETER WITH WHICH THE ECCENTRICITY IS PERMITTED. ECCENTRICITY= ONE HALF THE DIAL GAGE READING.

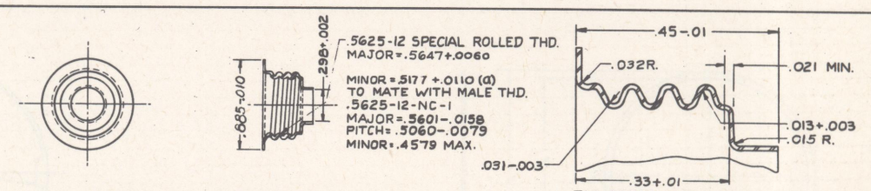
CLASSIFICATION CHANGED TO UNCLASSIFIED BY AUTHORITY OF O.C.M. 25014 BY LT. COL. [signature] 9-7-44



CAP, CLOSING 82-13-8D2

TIN PLATE, TYPE II, CLASS B, GRADE 2, 107 LBS. PER BASE BOX.

REMOVE ALL BURRS.

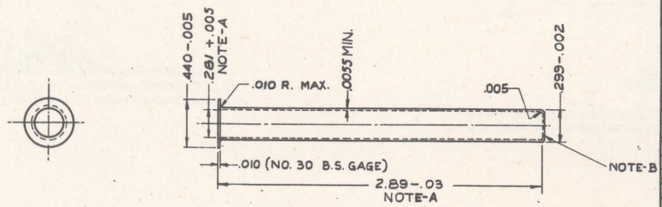


ADAPTER, WELL, DETONATOR 82-13-8E2

TIN PLATE, TYPE II, CLASS B, GRADE 2, 100 LBS. PER BASE BOX.

(a) MUST BE MAINTAINED BY GAGING WITH PLAIN PLUG GAGES.

ENLARGED VIEW OF ROLLED THREAD
SCALE, INCHES 2/1



WELL, DETONATOR 82-13-8F2
GILDING METAL

NOTES:-

A- CAVITY MUST RECIEVE ENTIRE LENGTH OF A PLUG GAGE. .280 MIN. DIA. X .286 MIN. LENGTH
B- CLOSED END MAY BE FLAT OR ROUNDED.
C- DIMENSIONS CONTROL TOOL MANUFACTURE.

SCALE, INCHES 2/1

CHARGE, SHAPED, 40 LB. M3. LOADING DETAILS

JULY 10, 1944 REVISIONS				CLASS	DIVISION	DRAWING	FILE
1	9-7-44			82	13	8	
2	5-28-45						

TOLERANCE ON DIMENSIONS NOT OTHERWISE SPECIFIED
DECIMAL ±
FRACTIONAL ±
ANGULAR ±

DFTSMAN	TRACER	ORD. ENGINEER
F.W.K.	C.W.S.	A.A.T.

CHECKER	ENGINEER
G.L.P. B.R.	K

DRG. PERTAINS TO	
82-13-2	LOADING ASSY
82-0-122	ASSY., COMPLETE

SUBMITTED: [signature] PRIN. ENG., ORD. DEPT. U.S.A.

EXAMINED: [signature] LT. COL., ORD. DEPT. U.S.A.

APPROVED BY ORDER OF THE CHIEF OF ORDNANCE: [signature] COL., ORD. DEPT. U.S.A.

D

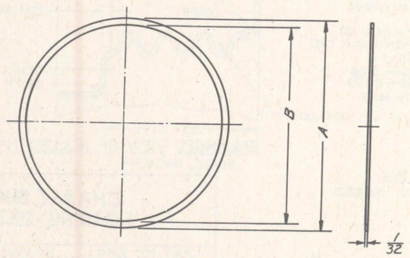
ORDNANCE DEPT. U.S.A.

DESIGN DATA

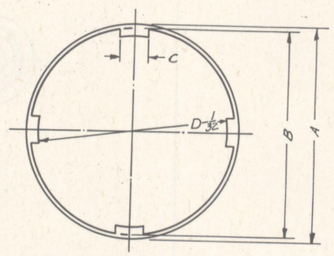
LINE NO	BOMB DESIGNATION	GASKET TAIL CLOSING PLUG A	GASKET TAIL CLOSING PLUG B	GASKET TAIL CLOSING PLUG PIECEMARK	GASKET BODY DIMENSION A	GASKET BODY DIMENSION B	GASKET BODY PIECE MARK	GASKET NOSE DIMENSION A	GASKET NOSE DIMENSION B	GASKET NOSE PIECE MARK	GASKET(ALTERNATIVE) NOSE DIMENSION C	GASKET(ALTERNATIVE) NOSE DIMENSION D	GASKET(ALTERNATIVE) NOSE PIECE MARK	GASKET(ALTERNATIVE) TAIL CLOSING PLUG C	GASKET(ALTERNATIVE) TAIL CLOSING PLUG D	GASKET(ALTERNATIVE) TAIL CLOSING PLUG PIECEMARK	GASKET(ALTERNATIVE) BODY DIMENSION C	GASKET(ALTERNATIVE) BODY DIMENSION D	GASKET(ALTERNATIVE) BODY PIECE MARK	REMARKS
1	100LB, M30, DEMO				3 1/16	3 7/16	82-14-25B	2 3/4	2	82-14-25S										
2	260LB, AN-M81, FRAG							2 3/4	2	82-14-25S	.5	1 29/32	82-14-25SA							
3	300LB, M58, DEMO				5 3/8	5 3/8	82-14-25C	2 3/4	2	82-14-25S										
4																				
5	500LB, M43, DEMO				6 7/8	6 7/16	82-14-25D	2 3/4	2	82-14-25S				1						
6																				
7	1000LB, M44, DEMO				10 11/32	9 1/2	82-14-25E	2 3/4	2	82-14-25S										
8																				
9	2000LB, M34, DEMO				11 1/32	10 1/16	82-14-25F	2 3/4	2	82-14-25S										
10																				
11	100LB, AN-M30A1, G.P.				3 27/32	3 17/32	82-14-25P	2 3/4	2	82-14-25S	.5	1 29/32	82-14-25SA							
12																				
13	250LB, AN-M57A1 G.P.				5 27/32	5 13/32	82-14-25G	2 3/4	2	82-14-25S	.5	1 29/32	82-14-25SA				1.0	3 5/16	82-14-25PA	
14	500LB, AN-M76, INCENDIARY							2 3/4	2	82-14-25S	.5	1 29/32	82-14-25SA				1.0	5 5/16	82-14-25GA	
15	500LB, AN-M43, G.P.				6 31/32	6 9/32	82-14-25N	2 3/4	2	82-14-25S	.5	1 29/32	82-14-25SA							
16	500LB, AN-MC441, G.P.				6 27/32	6 13/32	82-14-25N	2 3/4	2	82-14-25S	.5	1 29/32	82-14-25SA							
17	500LB, AN-M58A2, S.A.P.				6 27/32	6 13/32	82-14-25N	2 3/4	2	82-14-25S	.5	1 29/32	82-14-25SA				1.0	6 1/16	82-14-25NA	
18	500LB, AN-M78, CHEMICAL	2 3/4	2.5	82-14-25T	5 3/32	5 1/32	82-14-25K										1.0	6 1/16	82-14-25NA	
19	1000LB, AN-M44, G.P.							2 3/4	2	82-14-25S	.5	1 29/32	82-14-25SA	.5	2 25/32	82-14-25TA	1.0	4 7/16	82-14-25KA	
20	1000LB, AN-MC54A1, G.P.				9 31/32	9 29/32	82-14-25H	2 3/4	2	82-14-25S	.5	1 29/32	82-14-25SA				1.0	9 5/16	82-14-25HA	
21	1000LB, AN-M59A1, S.A.P.				9 31/32	9 29/32	82-14-25H	2 3/4	2	82-14-25S	.5	1 29/32	82-14-25SA				1.0	9 5/16	82-14-25HA	
22	1000LB, AN-M79, CHEMICAL	2 3/4	2.5	82-14-25T	6 3/16	6 3/32	82-14-25L										1.0	6 1/16	82-14-25LA	
23	2000LB AN-M34, G.P.							2 3/4	2	82-14-25S	.5	1 29/32	82-14-25SA	.5	2 25/32	82-14-25TA				
24	2000LB, AN-MC66A1, G.P.				10 1/16	10 1/32	82-14-25M	2 3/4	2	82-14-25S	.5	1 29/32	82-14-25SA				1.0	10 3/16	82-14-25MA	
25	4000LB, AN-M56A1, LIGHTCASE				10 31/32	10 29/32	82-14-25M	2 3/4	2	82-14-25S	.5	1 29/32	82-14-25SA				1.0	10 7/16	82-14-25MA	
26					11 1/32	10 1/16	82-14-25F	2 3/4	2	82-14-25S	.5	1 29/32	82-14-25SA				1.0	10 3/16	82-14-25FA	

LINE NO	LIST OF SPECIFICATIONS	SPEC NUMBER *	REQUIRED BY
1	AMMUNITION, EXCEPT SMALL ARMS AMM, GENERAL SPEC FOR	50-O-1	DWG 82-14-25
2			
3	GASKET, MATERIAL, LEATHER, (FIBRATED), SHEET (FOR ORDNANCE USE)	JAN-G-402	DWG 82-14-25
4	PACKING, FIBER, (FOR) LUBRICATING AND FUEL OIL	HH-P-96	DWG 82-14-25

* THE SPECIFICATION NUMBERS SHOWN ARE BASIC NUMBERS ONLY WHEN A SPECIFICATION IS REVISED A LETTER IS AFFIXED TO ITS BASIC NUMBER. SPECIFICATIONS REFERRED TO IN THESE SPECIFICATIONS AND NOT LISTED HEREON, SHALL NOT APPLY.



GASKET
LEATHER, FIBRATED
DIAMETER DIMENSIONS CONTROL TOOL MANUFACTURE.
ALTERNATIVE MATERIAL FOR NOSE GASKETS AND TAIL CLOSING PLUG GASKETS ONLY:- PACKING, FIBER, (FOR) LUBRICATING AND FUEL OIL.



GASKET (ALTERNATIVE)
LEATHER, FIBRATED
DIAMETER DIMENSIONS CONTROL TOOL MANUFACTURE.
ALTERNATIVE MATERIAL FOR NOSE GASKETS AND TAIL CLOSING PLUG. GASKETS ONLY:- PACKING, FIBER, (FOR) LUBRICATING AND FUEL OIL.

NOTICE: THIS DRAWING SHALL NOT BE USED NOR REPRODUCED EITHER WHOLLY OR IN PART EXCEPT WHEN AUTHORIZED IN CONNECTION WITH UNITED STATES GOVERNMENT PROCUREMENT.

SUPERSEDES 82-14-25 WITHOUT CHANGE FEB 21, 1949

SCALE, INCHES, 4

GASKETS, BOMBS

APRIL 24, 1941

REVISIONS			
7	2-12-47		
8	2-21-49		

DRG. PERTAINS TO
82-14-8
82-14-9
82-14-11
82-14-13
82-14-14
82-14-29
82-14-30
82-14-31
82-14-32

D

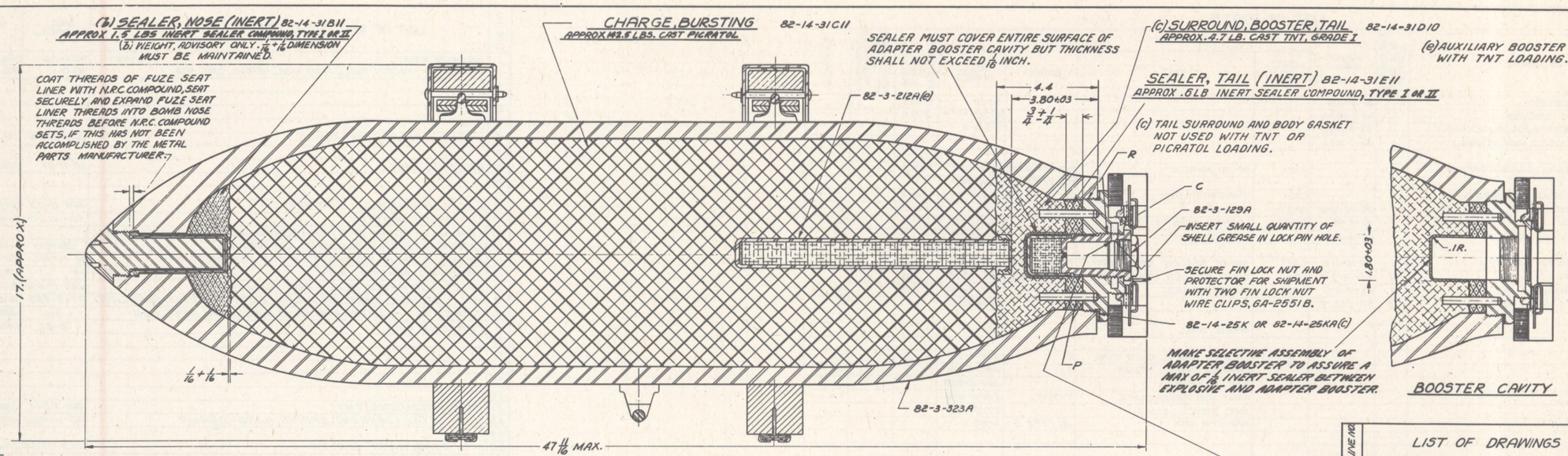
CLASS	DIVISION	DRAWING	FILE
82	14	25	

TOLERANCE ON DIMENSIONS NOT OTHERWISE SPECIFIED
DECIMAL ±
FRACTIONAL ±
ANGULAR ±

DFTSMAN W.M.R. TRACER E.J.S. ENGINEER
CHECKER R.C.J. ENGINEER

SUBMITTED:- Col, ORD. DEPT. U.S.A.
EXAMINED:- Col, ORD. DEPT. U.S.A.
APPROVED BY ORDER OF THE CHIEF OF ORDNANCE:- Col, ORD. DEPT. U.S.A.

ORDNANCE DEPT., U.S.A.



NOTES:-

B- COAT ENTIRE EXTERIOR SURFACE OF BOMB, INCLUDING FIN LOCK NUT AND CLOSING PLUGS, EXCEPT THREADS (ADAPTER OPTIONAL) AND SHIPPING BANDS WITH OLIVE DRAB LACQUER ENAMEL OR OLIVE DRAB ENAMEL. IN ALL CASES PAINT THE NOSE AND TAIL ENDS OF THE BOMBS WITH YELLOW LACQUER ENAMEL OR YELLOW ENAMEL AS SHOWN ON THE MARKING DIAGRAM TO INDICATE THAT THE BOMBS ARE LOADED WITH HIGH EXPLOSIVES. WHEN BOMB IS COATED WITH LACQUER ENAMEL, PAINT YELLOW STRIPES WITH LACQUER ENAMEL OR ENAMEL. WHEN BOMB IS COATED WITH ENAMEL, USE ENAMEL ONLY FOR YELLOW STRIPES. WHEN SHIPPING BANDS ARE NOT REMOVED IN LOADING OPERATION, PAINTING OF THE PERIPHERY OF THE BOMB UNDER THE BANDS MAY BE OMITTED. SEE DATA CARD FOR PAINTING ON EMPTY BOMBS.

C- RECOAT FIN LOCK NUT THREADS OF BASE PLUG WITH SHELL GREASE.

D- MARK WITH BLACK STENCIL INK.

E- INSERT LOT NUMBER OF BOMB.

F- INDICATES UNITED STATES PROPERTY.

G- INSERT MONTH AND YEAR OF LOADING.

H- FOR LESS THAN CARLOAD SHIPMENTS, SHIPPING POINT, DESTINATION AND SHIPPING TICKET NO. SHALL BE STENCILED IN 1/2 INCH HIGH LETTERS AND FIGURES LOCATED APPROX 180° FROM MARKING SHOWN.

L- VOLUME, CUBIC FEET, OF ENCLOSING RECTANGULAR PARALLELOPIPED.

M- INSERT AVERAGE (25 BOMBS IN LOT) GROSS WEIGHT AS SHIPPED.

N- THIS SPACE IS RESERVED FOR STAMPS OF INSPECTOR WHO ACCEPTS THE LOADED BOMB.

P- COAT INTERIOR SURFACE OF BASE PLUG AND STUDS WITH ACID-PROOF BLACK PAINT, TYPE II.

R- COAT THREADS WITH ACID-PROOF BLACK PAINT TYPE II, AND ASSEMBLE.

S- COAT BODY GASKET UNIFORMLY WITH MELTED PARAFFIN AND ASSEMBLE AS INDICATED AFTER PARAFFIN SETS.

T- SHIPPING BANDS MUST NOT BE SPREAD MORE THAN TWO INCHES AT OPEN ENDS AND SHALL BE ADJUSTED, IF NECESSARY, TO SECURE TIGHT FIT IN ASSEMBLING OPERATION.

U- INSERT A.I.C. SYMBOL.

LOADING ASSEMBLY 82-14-31A12

MEAN VOLUME OF CHARGE CAVITY, ADAPTER-BOOSTER AND NOSE FUZE SEAT LINER ASSEMBLED, 2700 CU. IN.
(ALTERNATIVE LOADING AM 50-50 SHOWN TO ILLUSTRATE SURROUND)

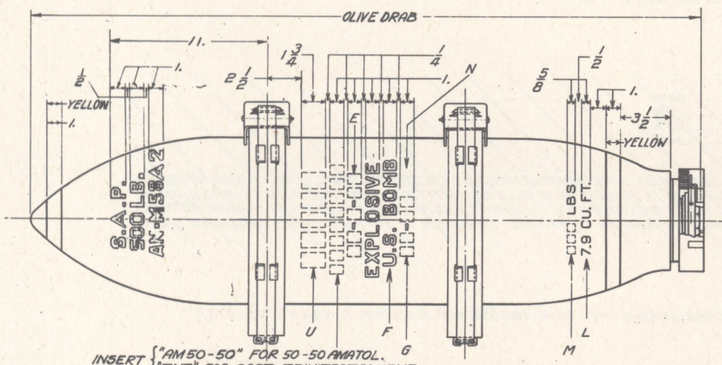
SURFACES BETWEEN INERT SEALERS, BURSTING CHARGE AND BOOSTER SURROUND NEED NOT BE FLAT.

GAGE LOCK PIN HOLE WITH .25 DIA. PIN, .66 LONG, TO ASSURE ASSEMBLY OF LOCK PIN FLUSH OR BELOW FLUSH WITH MAJOR DIA. OF 1/2 INCH THREADS.

WEIGHTS (ESTIMATED)			
PART	AM 50-50	TNT *	PICRATOL
METAL PARTS ASS'Y (d)	375.4	375.4	375.4
ADAPTER-BOOSTER, M102A1	1.7	1.7	1.7
AUXILIARY-BOOSTER, M104 (1)	.78	——	.78
CHARGE, BURSTING	129.9	141.4	142.5
SEALER, NOSE (INERT)	1.5	1.5	1.5
SURROUND, BOOSTER, TAIL (TNT)	4.7	——	——
GASKET (BODY)	.01	——	——
SEALER, TAIL (INERT)	.6	.6	.6
TOTAL	514.6	520.6	522.5
SHIPPING BANDS	22.	22.	22.
PROTECTOR, NUT, FIN LOCK	1.3	1.3	1.3
SHIPPING WEIGHT	537.9	543.9	545.8

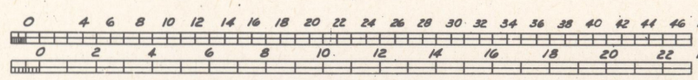
(d) WITHOUT SHIPPING BANDS, FIN LOCK NUT PROTECTOR, AND TAIL PLUG.

* ALTERNATIVE LOADING.



MARKING DIAGRAM

TO BE LOCATED IN LINE WITH DOUBLE SUSPENSION LUGS.



LINE NO.	LIST OF DRAWINGS	DRAWING NUMBER
1	LOADING ASSEMBLY	82-14-31
2	LIST OF PARTS AND LIST OF SPEC.	82-14-31A
3	METAL PARTS ASSEMBLY	82-3-323
4	ADAPTER-BOOSTER, M102A1 ASSEMBLY	82-3-129
5		
6	AUXILIARY BOOSTER, M104 ASSEMBLY	82-3-212
7	BOMBS, DEMOLITION, GASKETS	82-14-25
8	CLIP, WIRE, FIN LOCK NUT	GA-2551

SUPERSEDES OLD TRACING 82-1431, UNDER REVISION DATE OF JUNE 26, 1944.

BOMB, SEMI-ARMOR PIERCING, 500 LB., AN-M58A2, LOADING ASSEMBLY (WITHOUT FUZING COMPONENTS) AND MARKING DIAGRAM.

NOV. 10, 1941

REVISIONS			
8	4-25-44		
9	6-26-44		
10	8-4-45		
11	4-29-48		
12	9-23-48		

CLASS	DIVISION	DRAWING	FILE
82	14	31	

TOLERANCE ON DIMENSIONS NOT OTHERWISE SPECIFIED
DECIMAL ±
FRACTIONAL ±
ANGULAR ±

DRG. PERTAINS TO

D'FTSMAN C.B.C. | TRACER B.J.N. | ENGINEER | CHECKER E.J.S. | APPROVING ENGINEER 9-29-48

SUBMITTED: LT. COL. ORD. DEPT. U.S.A.

EXAMINED: ORD. DEPT. U.S.A.

APPROVED BY ORDER OF THE CHIEF OF ORDNANCE: C.S. Ruck 6-A-8 COL. ORD. DEPT. U.S.A.

D

ORDNANCE DEPT. U.S.A.

LIST OF PARTS

LINE NO.	NAME OF PART	NUMBER REQ. PER COMPONENT	PIECE-MARK	MATERIAL: SIZE OR FORM	MATERIAL: KIND	MATERIAL: GRADE	MATERIAL: SPEC. NUMBER	APPROXIMATE UNIT WEIGHT (POUNDS)	APPROX. GROSS WT. OF RAW STOCK PER 1000 ASSEMBLIES	REMARKS
1	LOADING ASSEMBLY		82-14-31A				50-18-1	545.8		
2	METAL PARTS ASSEMBLY	1	82-3-323A				AXS-486, 50-71-1 MASS-36.	399.4		
3	ADAPTER-BOOSTER, M102A1, ASSEMBLY	1	82-3-129A				50-16-3	1.7		
4	AUXILIARY BOOSTER, M104, ASSEMBLY	1	82-3-212A					.78		(b)
5										
6	CHARGE, BURSTING (ALTERNATIVE)			CAST	50-50 AMATOL	AMMONIUM NITRATE	50-11-59	129.9		
7						TRINITROTOLUENE	JAN-T-248			
8	CHARGE, BURSTING (ALTERNATIVE)			CAST	TRINITROTOLUENE	I	JAN-T-248	141.4		
9	CHARGE, BURSTING	1	82-14-31C	CAST	PICRATOL			142.5		(f)
10	GASKET, BODY	1	82-14-25K	SHEET	LEATHER, FIBRATED		50-11-114			(a)
11	GASKET, BODY (ALTERNATIVE)		82-14-25KA	SHEET	LEATHER, FIBRATED		50-11-114			(a)
12										
13	SEALER, NOSE (INERT)	1	82-14-31B	CAST	INERT SEALER COMPOUND	TYPE I OR II	AXS-1544	1.5		
14	SEALER, TAIL (INERT)	1	82-14-31E	CAST	INERT SEALER COMPOUND	TYPE I OR II	AXS-1544	.6		
15	SURROUND, BOOSTER, TAIL	1	82-14-31D	CAST	TRINITROTOLUENE	I	JAN-T-248	4.7		(h)
16	CLIP, WIRE, FINLOCK NUT	2	GA-25518		STEEL		COMMERCIAL			(g)
17										
18					GREASE, SHELL		50-11-37			
19										
20					LACQUER ENAMEL, OLIVE DRAB	II	JAN-L-73			(c)
21					LACQUER ENAMEL, YELLOW	I	JAN-L-73			(d)
22					N.R.C. COMPOUND		JAN-C-388			
23					PAINT, ACID PROOF, BLACK	TYPE II	JAN-P-450			
24					INK, STENCIL, BLACK		TT-I-558			
25					PARAFFIN WAX	A, TYPE I	2-63			
26										
27										
28										
29										
30										

(a)-NOT REQUIRED WHEN BOMB IS LOADED WITH TNT OR PICRATOL.
(b)-USE WHEN LOADING BOMBS WITH 50-50 AMATOL OR PICRATOL.
(c)-ALTERNATIVE MATERIAL:-ENAMEL, OLIVE DRAB, GRADE II, SPEC. JAN-E-74.
(d)-ALTERNATIVE MATERIAL:-ENAMEL, YELLOW, GRADE I, SPEC. JAN-E-74.

(e) WAX PAD, MATERIALS USED (BY WEIGHT):-

ROSIN, SPEC. 3-45	34%
WAX, HYDROCARBON, PETROLEUM, SPEC., PAS-1049	9%
PETROLATUM, U.S.P. SPEC. 4-1051	23%
KAOLIN, N.F. VI, COMMERCIAL	34%

(N.F.=NATIONAL FORMULARY)

METHOD OF PREPARATION

THE ROSIN, WAX AND PETROLATUM ARE HEATED TOGETHER AT A TEMPERATURE NOT EXCEEDING 120°C (248°F) AND STIRRED UNTIL A HOMOGENEOUS MELT IS OBTAINED. THE KAOLIN IS ADDED IN SMALL QUANTITIES AT A TIME AND STIRRED UNTIL AN INTIMATE MIXTURE IS PRODUCED. PRECAUTIONS MUST BE TAKEN TO PREVENT OVER-HEATING DURING MANUFACTURE AND SEGREGATION OF THE INGREDIENTS DURING COOLING. THE KAOLIN IS PASSED THROUGH A 60-MESH U.S. STANDARD SIEVE BEFORE USE.

(f)-PICRATOL:-

TNT _____ SPEC JAN-T-248.
EXPLOSIVE 'D'

(g)-ALTERNATIVE MATERIAL:-WIRE, STEEL (CARBON) SPRING, HARD-DRAWN, SPEC QQ-W-465 (60,000 P.S.I. MIN TENSILE STRENGTH).
(h)-REQUIRED ONLY WHEN BOMB IS LOADED WITH COMP 'B'.

LIST OF SPECIFICATIONS

LINE NO.	LIST OF SPECIFICATIONS	SPEC. NUMBER*	REQUIRED BY
1	AMMONIUM NITRATE (PXS-810)	50-11-59	DRG. 82-14-31
2	AMMUNITION, EXCEPT SMALL ARMS AMM., GENERAL SPEC. FOR	50-0-1	DRG. 82-14-31
3			
4			
5			
6			
7	ENAMEL, LUSTRELESS, QUICK-DRYING	JAN-E-74	DRG. 82-14-31
8			
9	GREASE, SHELL	50-11-37	DRG. 82-14-31
10			
11			
12	LACQUER ENAMEL, LUSTRELESS	JAN-L-73	DRG. 82-14-31
13	LEATHER, FIBRATED	50-11-114	DRG. 82-14-25
14	LOADING OF BOMBS WITH TRINITROTOLUENE (TNT), AND 50-50 AMATOL		
15	CASTING METHOD, ASSEMBLING AND PACKING.	50-18-1	JAN-T-248
16	METALS; GENERAL SPECIFICATION FOR INSPECTION OF	QQ-M-151	QQ-W-465
17	COMPOUND, SEALING, N.R.C. JAN-C-388		DRG. 82-14-31
18	PAINT, ACID PROOF, BLACK, FOR AMMUNITION	JAN-P-450	DRG. 82-14-31
19	INK, STENCIL; OPAQUE, FOR MARKING NONPOROUS SURFACES (METAL, ETC)	TT-I-558	DRG. 82-14-31
20	PAINTS AND RELATED MATERIALS, GENERAL SPEC. FOR	3-1	JAN-L-73
21	PARAFFIN WAX	2-63	DRG. 82-14-31
22			
23			
24			
25			
26			
27	TRINITROTOLUENE (TNT)	JAN-T-248	DRG. 82-14-31
28	WIRE, STEEL (CARBON); SPRING, HARD-DRAWN	QQ-W-465	DRG. 82-14-31
29			
30	COMPOUND, INERT SEALER	AXS-1544	DRG. 82-14-31

* THE SPECIFICATION NUMBERS SHOWN ARE BASIC NUMBERS ONLY. WHEN A SPECIFICATION IS REVISED A LETTER IS AFFIXED TO ITS BASIC NUMBER. SPECIFICATIONS REFERRED TO IN THESE SPECIFICATIONS AND NOT LISTED HEREON, SHALL NOT APPLY.

SUPERSEDES OLD TRACING 82-14-31A UNDER REVISION DATE OF MARCH 31, 1944

BOMB, SEMI-ARMOR PIERCING, 500 LB., AN-M58A2.
LIST OF PARTS AND LIST OF SPECS. FOR LOADING ASSEMBLY.

NOVEMBER 10, 1941

CLASS	DIVISION	DRAWING	FILE
82	14	31A	

REVISIONS

7	8-9-43	11-5-41
8	3-31-44	11-5-41
9	4-25-44	11-5-41
10	8-4-45	11-5-41
11	4-29-48	11-5-41

DRG. PERTAINS TO: 82-14-31

TOLERANCE ON DIMENSIONS NOT OTHERWISE SPECIFIED
DECIMAL ±
FRACTIONAL ±
ANGULAR ±

DRAFTSMAN: C.B.C. | TRACER: R.J.F. M.S.C. | ENGINEER: D.C.
CHECKER: N.W.F. | PRINCIPAL ENGINEER: D.C.

SUBMITTED:- Lt. Col., Ord. Dept. U.S.A.
EXAMINED:- Ord. Dept., U.S.A.
APPROVED BY ORDER OF THE CHIEF OF ORDNANCE:- C. E. Hurd, Col., Ord. Dept., U.S.A.

D

ORDNANCE DEPT., U.S.A.

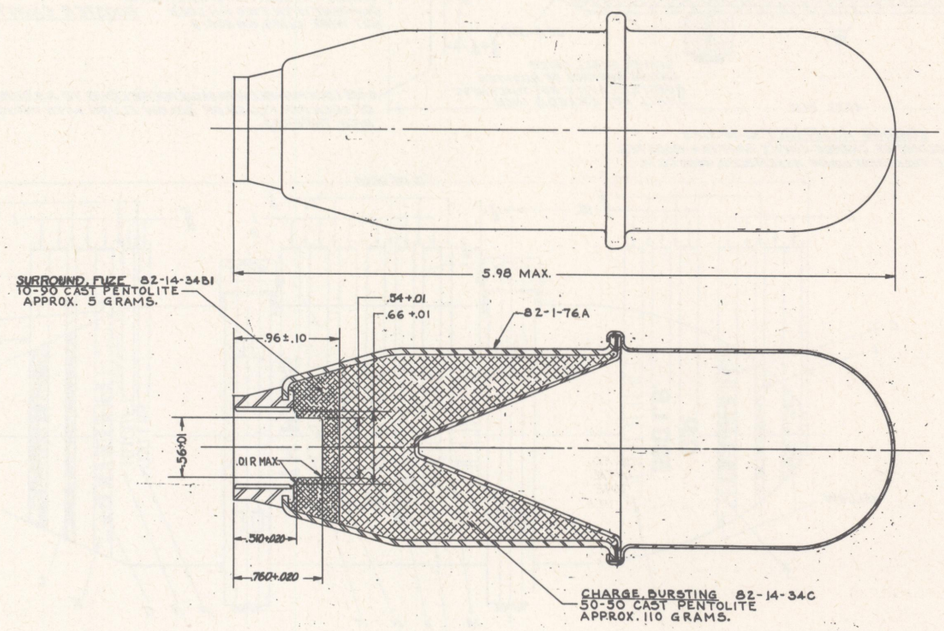
LIST OF PARTS

LINE NO.	NAME OF PART	NUMBER REQ'D PER COMPONENT	PIECE MARK	MATERIAL: SIZE OR FORM	MATERIAL: KIND	MATERIAL: GRADE	MATERIAL: SPEC. NUMBER	APPROXIMATE UNIT WEIGHT (POUNDS)	APPROX. GROSS WT. OF RAW STOCK PER 1000 ASSEMBLIES	REMARKS
1	ASSEMBLY		82-14-34A					.76		
2	ASSEMBLY, BODY, OGIVE AND CONE	1	82-1-76A					.51		
3										
4										
5										
6	CHARGE, BURSTING	1	82-14-34C		50-50 CAST PENTOLITE		50-11-126	.24		
7	FUZE SURROUND	1	82-14-34B		10-90 CAST PENTOLITE		AXS-654	.01		
8										
9										
10										

LIST OF SPECIFICATION

LINE NO.	LIST OF SPECIFICATION	SPEC. NUMBER	REQUIRED BY
1	AMMUNITION, GENERAL SPECIFICATIONS FOR	50-0-1	82-14-34
2			
3			
4	GRENADES, A.T., M9A1 & M10, LOADING, ASSEMBLING & PACKING:	AXS-654	82-14-34
5			
6	PENTOLITE 50/50	50-11-126	AXS-654
7			
8			
10			
11			
12			
13			
14			
15			

* THE SPECIFICATION NUMBERS SHOWN ARE BASIC NUMBERS ONLY. WHEN A SPECIFICATION IS REVISED A LETTER IS AFFIXED TO ITS BASIC NUMBER. SPECIFICATIONS REFERRED TO IN THESE SPECIFICATIONS AND NOT LISTED HEREON, SHALL NOT APPLY.



ASSEMBLY 82-14-34 A1

CLASSIFICATION CHANGED TO RESTRICTED
BY AUTHORITY OF ORD. DEPT. ORDER 45-44
BY LT. COL., [redacted]
AUGUST 15, 1945

0 1 2 3 4 5 INCHES.

GRENADE, RIFLE, A.T., M9A1
BODY, OGIVE AND CONE LOADING ASSEMBLY

APRIL 14, 1942

REVISIONS

1	8-15-45			

DRG. PERTAINS TO

CLASS	DIVISION	DRAWING	FILE
82	14	34	

SYMBOL

D'FTSMAN	TRACER	L'D'G D'FTSMAN
F. P.	F. KURTH	A. C. HAHL
CHECKER	CHECKER	CHIEF D'FTSMAN
K.J.	T. J.	[redacted]

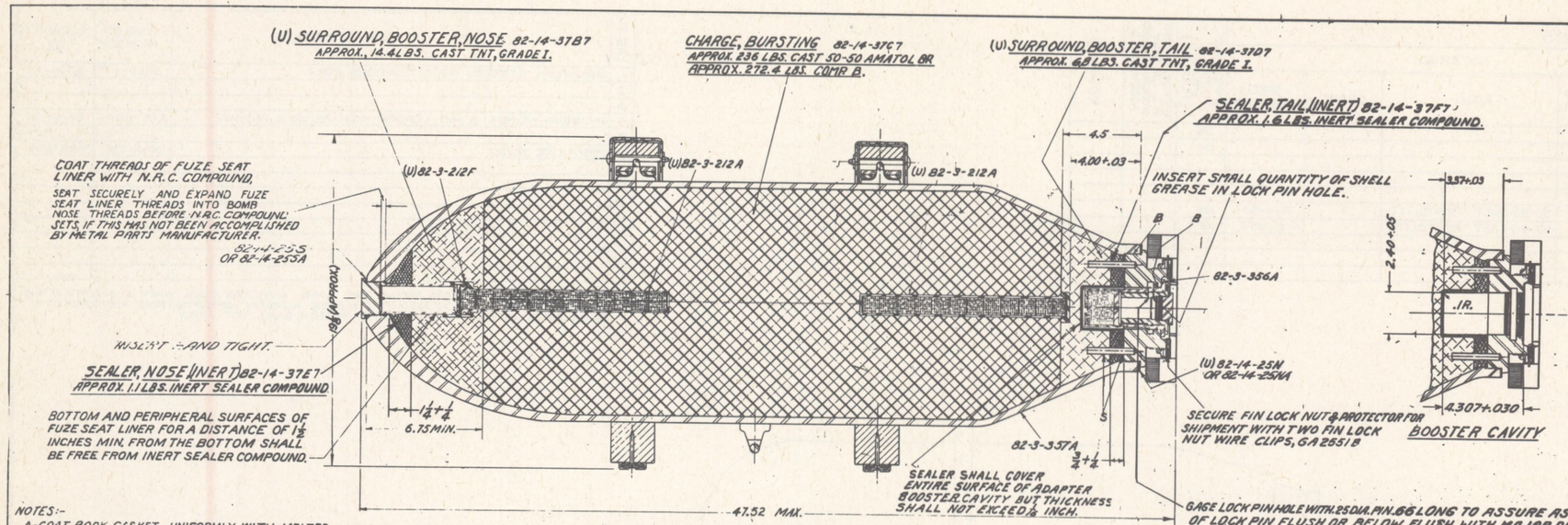
SUBMITTED:
[redacted]
MAJOR, ORD. DEPT., U.S.A.

EXAMINED:
W. W. Keller
LT. COL., ORD. DEPT., U.S.A.

APPROVED:
[redacted]
COL., ORD. DEPT., U.S.A.

D

ORDNANCE OFFICE, WAR DEPT.



N- VOLUME, CUBIC FEET, OF ENCLOSING RECTANGULAR PARALLELEPIPED:
P- INSERT AVERAGE (25 BOMBS IN LOT) GROSS WEIGHT, AS SHIPPED.
R- THIS SPACE IS RESERVED FOR STAMPS OF INSPECTOR WHO ACCEPTS THE LOADED BOMB.
S- COAT INTERIOR SURFACE OF BASE PLUG AND STUDS WITH ACID-PROOF BLACK PAINT, TYPE II.
U- AUXILLARY BOOSTER, SURROUND AND BODY GASKET NOT USED WITH T.N.T., COMP B OR TRITONAL.
W- FOR LESS THAN CARLOAD SHIPMENTS, SHIPPING POINT, DESTINATION AND SHIPPING TICKET NO. SHALL BE STENCILED IN 40 INCH HIGH LETTERS AND FIGURES LOCATED APPROX. 180° FROM MARKING SHOWN.
X- THIS STRIPE USED WHEN BOMB IS LOADED WITH COMP. B OR TRITONAL.

NOTES:-
A- COAT BODY GASKET UNIFORMLY WITH MELTED PARAFFIN AND ASSEMBLE AS INDICATED AFTER PARAFFIN SETS.
B- COAT THREADS WITH ACID-PROOF BLACK PAINT, TYPE II, AND ASSEMBLE.
C- INSERT "COMP B" OR "TRITONAL" AS APPLICABLE IN TWO PLACES 180° APART AND LOCATED IN LINE WITH SINGLE AND DOUBLE SUSPENSION LUGS.
D- COAT THREADS OF FIN LOCK NUT LIGHTLY WITH SHELL GREASE.
E- COAT ENTIRE EXTERIOR SURFACE OF BOMB, INCLUDING FIN LOCK NUT AND CLOSING PLUGS, EXCEPT THREADS (ADAPTERS OPTIONAL) AND SHIPPING BANDS WITH OLIVE DRAB, LACQUER ENAMEL OR OLIVE DRAB, ENAMEL. IN ALL CASES, PAINT THE NOSE AND TAIL ENDS OF THE BOMBS WITH YELLOW LACQUER ENAMEL OR YELLOW ENAMEL, AS SHOWN ON THE MARKING DIAGRAM, TO INDICATE THAT THE BOMBS ARE LOADED WITH HIGH EXPLOSIVES. WHEN BOMB IS COATED WITH LACQUER ENAMEL, PAINT YELLOW STRIPES WITH LACQUER ENAMEL OR ENAMEL. WHEN BOMB IS COATED WITH ENAMEL, USE ENAMEL ONLY FOR YELLOW STRIPES. WHEN SHIPPING BANDS ARE NOT REMOVED IN LOADING OPERATION, PAINTING OF THE PERIPHERY OF THE BOMB UNDER THE BANDS MAY BE OMITTED.

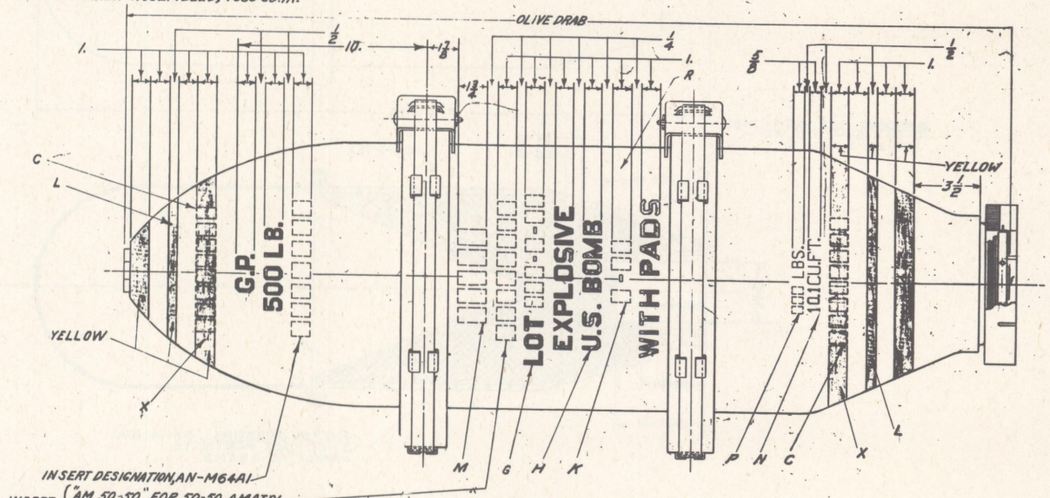
SEE DATA CARD FOR PAINTING ON EMPTY BOMBS.
SHIPPING BANDS MUST NOT BE SPREAD MORE THAN TWO INCHES AT OPEN ENDS AND SHALL BE ADJUSTED, IF NECESSARY, TO SECURE TIGHT FIT IN ASSEMBLING OPERATION.

F- MARK WITH STENCIL BLACK INK.
G- INSERT LOT NUMBER OF BOMB.
H- INDICATES UNITED STATES PROPERTY.
K- INSERT MONTH AND YEAR OF LOADING.
L- THIS STRIPE USED WHEN BOMB IS LOADED WITH TRITONAL.
M- INSERT A.I.C. SYMBOL.
Q- COAT THREADS IN NOSE CAVITY WITH SHELL GREASE PRIOR TO ASSEMBLING NOSE CLOSING PLUG.

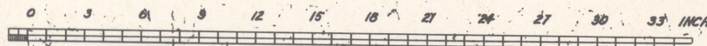
LINE NO	WEIGHT (ESTIMATED) LBS. PART	AM 50-50	T.N.T. *	COMP "B" *	TRITONAL *
1	SEALER, NOSE, (INERT)	1.1	1.1	1.1	1.1
2	SEALER, TAIL, (INERT)	1.6	1.6	1.6	1.6
3	METAL PARTS ASSEMBLY (b)	251.0	251.0	251.0	251.0
4	ADAPTER-BOOSTER, M115A1	3.69	3.69	3.69	3.69
5	AUXILIARY BOOSTER, M104 (2)	1.56			
6	SLEEVE, AUXILIARY BOOSTER	.11			
7	CHARGE, BURSTING	236.	265.7	272.4	278.0
8	SURROUND, BOOSTER, NOSE (TNT)	14.4			
9	SURROUND, BOOSTER, TAIL (TNT)	6.8	—		
10	GASKET (BODY)	.01			
11	TOTAL	516.3	523.1	529.8	535.4
12	PROTECTOR, NUT, FIN LOCK	1.6	1.6	1.6	1.6
13	SHIPPING BANDS (2)	22.	22.	22.	22.
14	SHIPPING WEIGHT	539.9	546.7	553.4	559.0

* ALTERNATIVE LOADING. (b) WITHOUT SHIPPING BANDS, FIN LOCK NUT PROTECTOR AND TAIL PLUG.

LOADING ASSEMBLY 82-14-37A8
MEAN VOLUME OF CHARGE CAVITY, ADAPTER-BOOSTER AND NOSE FUZE SEAT LINER ASSEMBLED, 4680 CU. IN.



MARKING DIAGRAM
TO BE LOCATED IN LINE WITH DOUBLE SUSPENSION LUGS. STENCILING MAY BE SEPARATED WHEN NECESSARY TO AVOID INTERFERENCE WITH THE SINGLE SUSPENSION LUG.



LINE NO	LIST OF DRAWINGS	DRAWING NUMBER
1	LOADING ASSEMBLY	82-14-37
2	LIST OF PARTS AND LIST OF SPEC.	82-14-37A
3	METAL PARTS ASSEMBLY	82-3-357
4	ADAPTER-BOOSTER, M115A1, ASSEMBLY	82-3-356
5	CLIP, WIRE, FIN LOCK NUT	GA-26518
6	AUXILIARY BOOSTER, M104, ASSEMBLY	82-3-212
7	BOMBS, GASKETS	82-14-25
8		

NOTICE: THIS DRAWING SHALL NOT BE USED NOR REPRODUCED EITHER WHOLLY OR IN PART EXCEPT WHEN AUTHORIZED IN CONNECTION WITH UNITED STATES GOVERNMENT PROCUREMENT.

BOMB, G.P. 500 LB., AN-M64A1 LOADING ASSEMBLY (WITHOUT FUZING COMPONENTS) AND MARKING DIAGRAM.

MAY 26, 1942

CLASS	DIVISION	DRAWING	FILE
82	14	37	

SYMBOL

REVISIONS			
1	10-26-42	6	6-3-44
2	4-14-43	7	7-31-45
3	8-9-43	8	8-15-45
4	12-21-43		
5	4-10-44		

DRG. PERTAINS TO

D'FTSMAN	TRACED	L'DG. D'FTSMAN
E.J.S.	E.J.S.	
CHECKER		CHIEF D'FTSMAN
N.W.F.		

SUBMITTED: [signature] MAJ., ORD. DEPT., U.S.A.
EXAMINED: [signature] LT. COL., ORD. DEPT., U.S.A.
APPROVED BY ORDER OF THE CHIEF OF ORDNANCE: [signature] COL., ORD. DEPT., U.S.A.

D

ORDNANCE DEPT. U.S.A.

LIST OF PARTS

LINE NO.	NAME OF PART	NUMBER REQ'D PER COMPONENT	PIECE-MARK	MATERIAL: SIZE OR FORM	MATERIAL: KIND	MATERIAL: GRADE	MATERIAL: SPEC. NUMBER	APPROXIMATE UNIT WEIGHT (POUNDS)	APPROX. GROSS WT. OF ASSEMBLED PIECES	REMARKS
1	LOADING ASSEMBLY		82-14-37A				50-18-1 / 50-11-1, WIS-36 / AXS-482	339.9 / 275.6		
2	METAL PARTS ASSEMBLY	1	82-3-357A							
3										
4	ADAPTER-BOOSTER, M115A1, ASSEMBLY	1	82-3-356A				50-16-3	3.69		
5	AUXILIARY BOOSTER, M106, ASSEMBLY	2	82-3-212A				50-16-6	.78		h
6	CHARGE, BURSTING (ALTERNATIVE)			CAST	TRITONAL			278.0		k
7	CHARGE, BURSTING (ALTERNATIVE)			CAST	COMP. B.		AXS-766	272.4		
8	CHARGE, BURSTING	1	82-14-37C	CAST	50-50 AMATOL	AMMONIUM NITRATE / TRINITROTOLUENE	JAN-A-175 / JAN-T-248	236.		
9	CHARGE, BURSTING (ALTERNATIVE)			CAST	TRINITROTOLUENE	I	JAN-T-248	265.7		
10	GASKET, NOSE	1	82-14-25S	SHEET	LEATHER, FIBRATED		50-11-114			f
11	GASKET, BODY	1	82-14-23N	SHEET	LEATHER, FIBRATED		50-11-114			h
12	CLIP, WIRE, FIN LOCK NUT	2	GA-25518		STEEL		COMMERCIAL			m
13	GASKET, NOSE (ALTERNATIVE)		82-14-25SA	SHEET	LEATHER, FIBRATED		50-11-114			f
14	SLEEVE, AUXILIARY BOOSTER	1	82-3-212F	MOLDED	BAKELITE		COMMERCIAL	.11		h
15	GASKET, BODY (ALTERNATIVE)		82-14-25NA	SHEET	LEATHER, FIBRATED		50-11-114			h
16										
17	SURROUND, BOOSTER, NOSE	1	82-14-37B	CAST	TRINITROTOLUENE	I	JAN-T-248	14.4		a
18	SURROUND, BOOSTER, TAIL	1	82-14-37D	CAST	TRINITROTOLUENE	I	JAN-T-248	6.8		a
19	SEALER, NOSE (INERT)	1	82-14-37E	CAST	INERT SEALER COMPOUND		AXS-1544	1.1		
20	SEALER, TAIL (INERT)	1	82-14-37F	CAST	INERT SEALER COMPOUND		AXS-1544	1.6		
21										
22										
23					GREASE, SHELL		50-11-37			
24										
25					LACQUER ENAMEL, OLIVE DRAB	II	JAN-L-73			g
26										
27					N.R.C. COMPOUND	A	50-11-10			
28										
29					PAINT, ACID PROOF, BLACK	TYPE II	3-106			
30					ENAMEL, YELLOW,	I	JAN-E-74			C
31					INK, STENCIL, BLACK		TT-I-558			
32										
33					PARAFFIN WAX	130-132	2-63			
34										
35										

g USE WHEN LOADING BOMBS WITH 50-50 AMATOL.
3 ALTERNATIVE MATERIAL :- ENAMEL, OLIVE DRAB, GRADE II, SPEC. JAN-E-74.
C-ALTERNATIVE MATERIAL:-LACQUER ENAMEL, YELLOW, GRADE I, SPEC. JAN-L-73.
f-ALTERNATIVE MATERIAL :- PACKING, FIBER, (FOR) LUBRICATING AND FUEL OIL, SPEC. HH-P-96.

h-NOT REQUIRED WHEN BOMB IS LOADED WITH TNT, COMP. B. OR TRITONAL.
k-TRITONAL
ALUMINUM POWDER, ATOMIZED _____ SPEC. AXS-1497.
TRINITROTOLUENE, GRADE I _____ SPEC. JAN-T-248.
m-ALTERNATIVE MATERIAL:-WIRE, STEEL (CARBON) SPRING, HARD DRAWN, SPEC. QQ-W-465 (60,000 LBS. P.S.I. MIN. TENSILE STRENGTH).

LIST OF SPECIFICATIONS

LINE NO.		SPEC. NUMBER *	REQUIRED BY
1			
2	AMMONIUM NITRATE	JAN-A-175	DRG. 82-14-37
3	AMMUNITION, EXCEPT SMALL ARMS AMM., GENERAL SPEC. FOR	50-0-1	DRG. 82-14-37
4	COMPOSITION B	AXS-766	DRG. 82-14-37
5	LEATHER, FIBRATED	50-11-114	DRG. 82-14-25
6	ALUMINUM POWDER, ATOMIZED	AXS-1497	DRG. 82-14-37
7	GREASE, SHELL	50-11-37	DRG. 82-14-37
8			
9	LACQUER ENAMEL, LUSTRELESS	JAN-L-73	DRG. 82-14-37
10			
11			
12	LOADING OF BOMBS WITH TRINITROTOLUENE (TNT) AND 50-50		
13	AMATOL AND COMP. "B", CASTING METHOD, ASSEMBLING AND PACKING	50-18-1	JAN-T-248
14	N.R.C. COMPOUND	50-11-10	DRG. 82-14-37
15			
16	PACKING, FIBER, (FOR) LUBRICATING AND FUEL OIL	HH-P-96	DRG. 82-14-25
17	PAINT, ACID PROOF, BLACK, FOR AMMUNITION	3-106	DRG. 82-14-37
18	ENAMEL, LUSTRELESS, QUICK-DRYING	JAN-E-74	DRG. 82-14-37
19	PAINTS AND RELATED MATERIALS, GENERAL SPEC. FOR	3-1	JAN-E-74
20			
21	INK, STENCIL; OPAQUE, FOR MARKING NON-POROUS SURFACES (METAL, GLASS, ETC.)	TT-I-558	DRG. 82-14-37
22	COMPOUND, INERT SEALER	AXS-1544	DRG. 82-14-37
23	PARAFFIN WAX	2-63	DRG. 82-14-37
24			
25	TRINITROTOLUENE (TNT)	JAN-T-248	DRG. 82-14-37
26	WIRE, STEEL (CARBON): SPRING, HARD-DRAWN	QQ-W-465	DRG. 82-14-37

* THE SPECIFICATION NUMBERS SHOWN ARE BASIC NUMBERS ONLY. WHEN A SPECIFICATION IS REVISED A LETTER IS AFFIXED TO ITS BASIC NUMBER. SPECIFICATIONS REFERRED TO IN THESE SPECIFICATIONS AND NOT LISTED HEREON, SHALL NOT APPLY.

NOTICE: THIS DRAWING SHALL NOT BE USED FOR MANUFACTURE EITHER WHOLLY OR IN PART EXCEPT WHEN AUTHORIZED UNDER CONTRACTS WITH THE UNITED STATES GOVERNMENT OR AGENCIES.

BOMB, G.P., 500 LB., AN-M64A1.
LIST OF PARTS & LIST OF SPECIFICATIONS FOR LOADING ASSEMBLY.

MAY 26, 1942

CLASS	DIVISION	DRAWING	FILE
82	14	37A	

REVISIONS

1	11-21-42	6	6-5-44
2	9-17-43	7	7-31-45
3	8-9-43	8	8-15-45
4	12-21-43		
5	4-10-44		

DRG. PERTAINS TO
82-14-37

D'ETSMAN L.N.G. | TRACER L.N.G. | L'DV. D'ETSMAN

CHECKER NWF | CHIEF D'ETSMAN

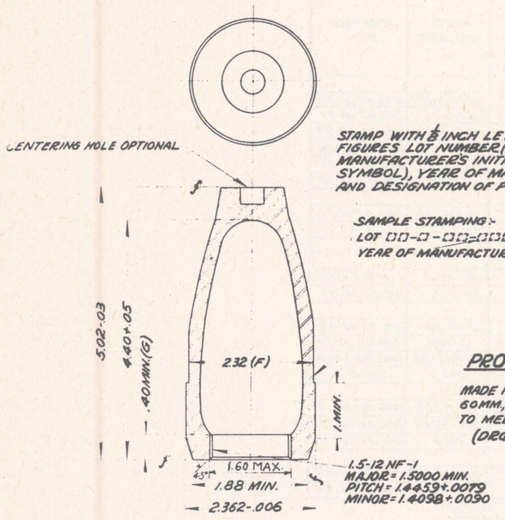
SUBMITTED: J. M. Gallagher, MAJ. ORD. DEPT. U.S.A.

EXAMINED: R. B. Butler Jr., LT. COL. ORD. DEPT. U.S.A.

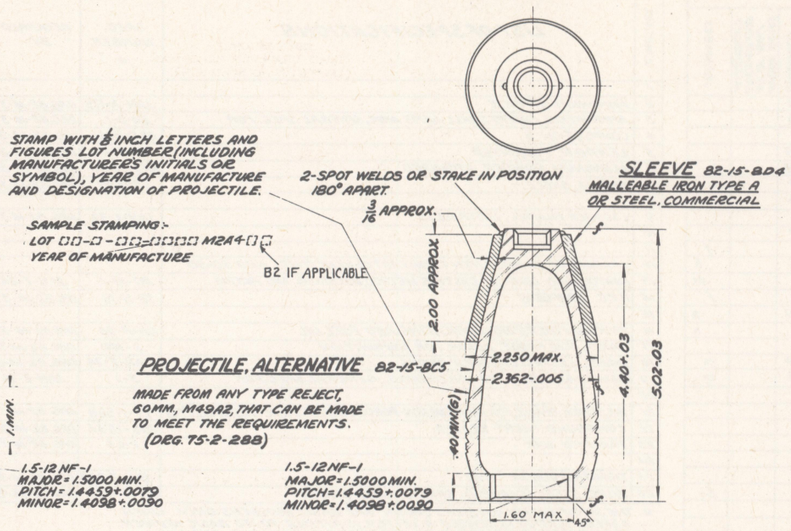
APPROVED BY ORDER OF THE CHIEF OF ORDNANCE: [illegible], COL. ORD. DEPT. U.S.A.

D

ORDNANCE DEPT. U.S.A.



PROJECTILE 82-15-BA6
ROUGH STEEL CASTING, TS-20-83A
60MM, M49A2, REJECT
FINISH AT "f"



PROJECTILE, ALTERNATIVE 82-15-BC5
MADE FROM ANY TYPE REJECT, 60MM, M49A2, THAT CAN BE MADE TO MEET THE REQUIREMENTS.
(DRG. 75-2-288)

SLEEVE 82-15-BD4
MALLEABLE IRON TYPE A OR STEEL, COMMERCIAL

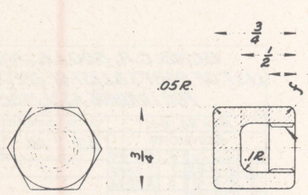
PROJECTILE ASSEMBLY, ALTERNATIVE 82-15-BB6

NOTE:- THE COMBINED WEIGHT OF PROJECTILE ALTERNATIVE AND SLEEVE SHALL WEIGH 2.12 ± .12 POUNDS. FOR ALL OTHER INFORMATION SEE DETAIL 82-15-BA WHEN ALTERNATIVE PROJECTILE IS FURNISHED PAINTING IS TO BE IN ACCORDANCE WITH NOTES "A" & "B" UNDER 82-15-BA PLUS PAINTING OF TAIL CAVITY.

NOTES:-
A- COAT ENTIRE EXTERIOR SURFACE EXCEPT BOTTOM FACE WITH SYNTHETIC PRIMER.
B- COAT INTERIOR SURFACE, EXCEPT THREADS, WITH ACID-PROOF BLACK PAINT, TYPE I.
C- ALLOWABLE ECCENTRICITY BETWEEN 2.362-.006 DIA. & 1.5-12 NF-1, .010 (.02 INDICATOR READING).
D- VOLUME TO OVERFLOWING = 8.7 CUBIC INCHES APPROX.
E- WEIGHT = 2.12 ± .12 POUNDS.
F- REDUCED SURFACE OF 2.32 DIA. MAY BE OMITTED. WHEN REDUCED SURFACE IS OMITTED, BURRS RAISED BY STAMPING MUST NOT EXTEND BEYOND MAXIMUM BOURRELET DIAMETER. (2.362-.006)
G- DEPTH OF PERFECT THREADS. THREADS TO BE CUT THROUGH TO CAVITY.
H- MAXIMUM ALLOWABLE GAP IN MEASURING OUT OF SQUARENESS OF THREAD AXIS WITH SHELL NOSE FACE, WHEN DETERMINED BY APPLICABLE ORDNANCE GAGES, .003

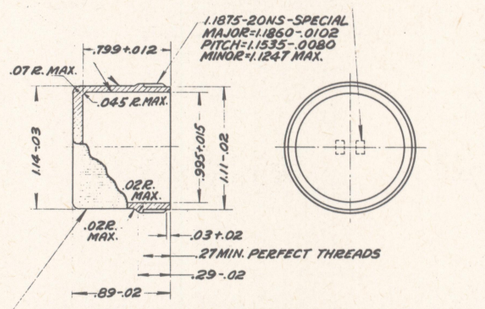
MANUFACTURER'S INITIALS OR SYMBOL, OPTIONAL. MAX. SIZE OF LETTERS OR FIGURES 1/8 X .003 HIGH.

THESE SURFACES MAY BE TAPERED FOR MOULDING WITHIN THE PRESCRIBED TOLERANCES.



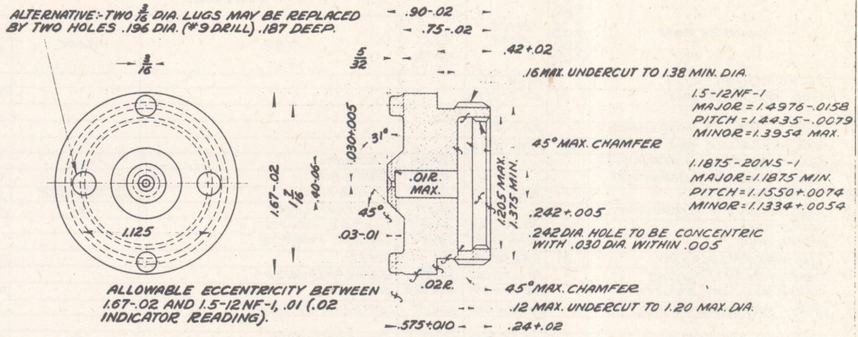
COVER, BASE, FUZE 82-15-BG5
MALLEABLE IRON CASTING, COMMERCIAL

FINISH-COAT OUTSIDE SURFACE WITH OLIVE DRAB LACQUER ENAMEL OR ENAMEL, AND APPLY A LIGHT COAT OF SHELL GREASE TO THREADS.



OPTIONAL, STRAIGHT KNURL, DIAMETER NOT TO EXCEED 1.08 MIN.

CUP, BOOSTER 82-15-BH5
PLASTIC COMPOUND, THERMO SETTING



ALLOWABLE ECCENTRICITY BETWEEN 1.67-.02 AND 1.5-12 NF-1, .01 (.02 INDICATOR READING).

HOUSING, RELAY IGNITING CHARGE 82-15-BK6
MALLEABLE IRON TYPE "A"
FINISH AT "f"

SUPERSEDES OLD TRACING 82-15-3 UNDER REVISION DATE OF MARCH 6, 1944.

MINE, ANTI-PERSONNEL M2A4 AND M2A4B2 DETAILS

JUNE 26, 1942

REVISIONS					
4	11-1-43				
5	3-6-44				
6	8-15-45				

CLASS	DIVISION	DRAWING	FILE
82	15	8	

DRG. PERTAINS TO
82-15-19
82-15-14
82-15-6

W.J.B. | J.J.G.

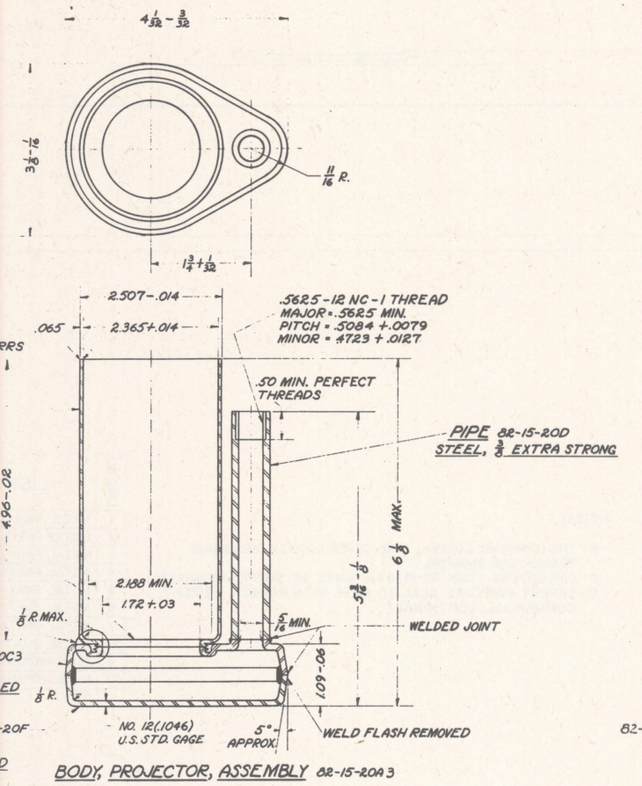
APPROVED: Ann Gallagher LT. COL.

LT. COL.

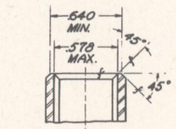
COL.

SCALE 3", 1", 1/4"

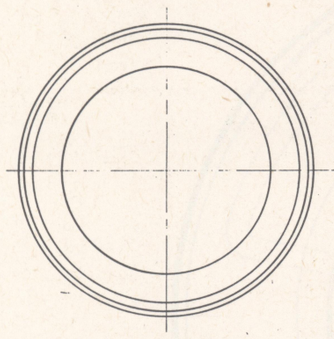
ORDNANCE DEPT. U.S.

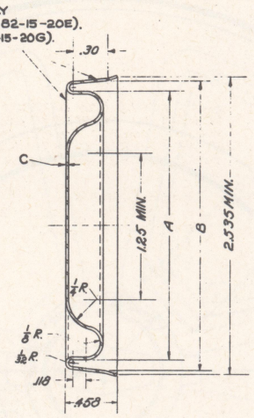


BODY, PROJECTOR, ASSEMBLY 82-15-20A3



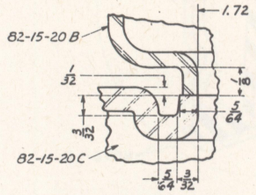
ENLARGED DETAIL OF PIPE
SCALE: 2/1



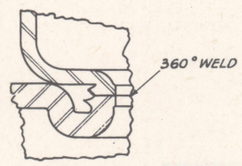


CAP 82-15-20☐ (SEE TABLE)
STEEL, WD1010
FINISH-ONE COAT SYNTHETIC PRIMER ALL OVER AND ONE COAT OF OLIVE DRAB OR LIGHT BLUE LACQUER ENAMEL, GRADE I, AS INDICATED.
* CAP 82-15-20E INTERCHANGEABLE WITH CAP 82-15-34D.

DESIGNATION	PIECEMARK	DIMENSION		
		A	B	C
M2A4 *	82-15-20E4	2.382-.006	2.490-.003	NO. 26 (.0179) OR NO. 24 (.0239) U.S. GAGE
M8	82-15-2062	2.370-.005	2.513-.003	NO. 30 (.0125) U.S. GAGE



ENLARGED DETAIL OF TUBE AND BASE BEFORE WELDING
(ALL DIMENSIONS APPROX.)
SCALE: 4/1



ENLARGED DETAIL OF TUBE AND BASE AFTER WELDING
SCALE: 4/1

NOTES:-
A- MAXIMUM ALLOWABLE ECCENTRICITY BETWEEN INSIDE DIAMETER OF TUBE (2.365 +.014) AND 1.72 +.03 DIA. HOLE AFTER ASSEMBLY = .01 INCH (.02 INDICATOR READING) AS DETERMINED BY ORDNANCE GAGES.
B- COAT ENTIRE EXTERIOR SURFACE OF PROJECTOR BODY ASSEMBLY WITH ONE COAT OF SYNTHETIC PRIMER AND ONE COAT OF OLIVE DRAB LACQUER ENAMEL OR ENAMEL, (FOR MINE M2A4, ASSEMBLY DRG. 82-15-19 ONLY). COAT INTERIOR OF TUBE, BASE AND PIPE WITH LACQUER-RESISTING SYNTHETIC PRIMER ONLY.
C- PROJECTOR BODY ASSEMBLY MUST WITHSTAND AN AIR PRESSURE TEST OF 75 POUNDS PER SQUARE INCH, FOR MINIMUM OF 15 SECONDS, WITHOUT LEAKAGE, WHEN SUBMERSED IN WATER.
D- COAT ENTIRE EXTERIOR SURFACE OF PROJECTOR BODY ASSEMBLY WITH ONE COAT OF SYNTHETIC PRIMER AND ONE COAT OF LIGHT BLUE LACQUER ENAMEL OR ENAMEL, (FOR MINE M8 ASSEMBLY DRG. 82-15-39 ONLY).

SCALE: 1, 2/1

MINE, ANTI-PERSONNEL, M2A4 & PRACTICE M8, DETAILS.

OCTOBER 14, 1943

REVISIONS			
1	6-23-44		
2	7-13-44		
3	9-8-44		
4	12-5-49		

DRG. PERTAINS TO
82-15-39
82-15-19

D

CLASS	DIVISION	DRAWING	FILE
82	15	20	

TOLERANCE ON DIMENSIONS NOT OTHERWISE SPECIFIED
DECIMAL ±
FRACTIONAL ±
ANGULAR ±

D'FTSMAN	TRACER	ENGINEER
J.J.T.	J.J.T.	
CHECKER	O.K.	SENIOR ENGINEER

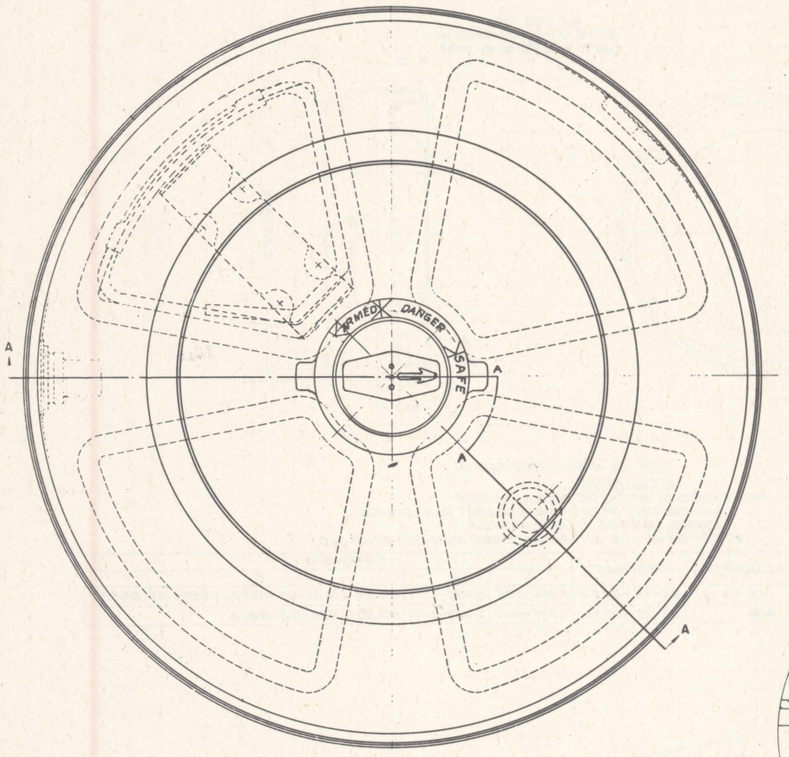
SUBMITTED:-
A. M. Gallagher
MAJOR, ORD. DEPT. U.S.A.

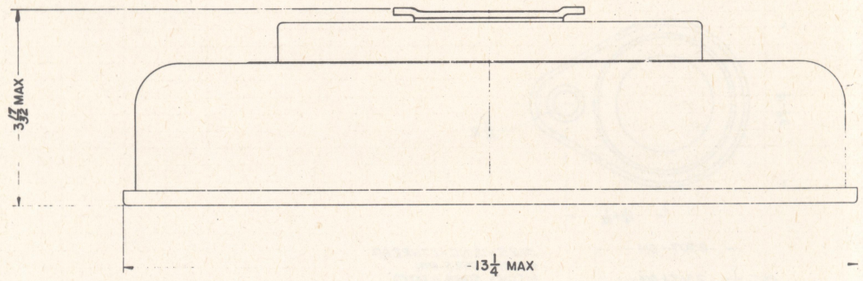
EXAMINED:-
J. T. Hofstetter, Jr.
COL., ORD. DEPT. U.S.A.

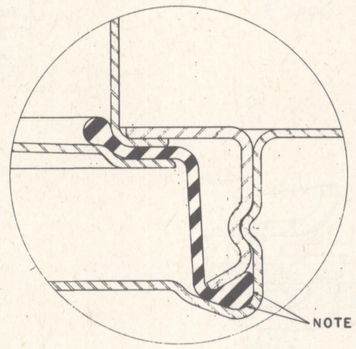
APPROVED BY ORDER OF THE CHIEF OF ORDNANCE:-
S. H. Wadley
COL., ORD. DEPT. U.S.A.

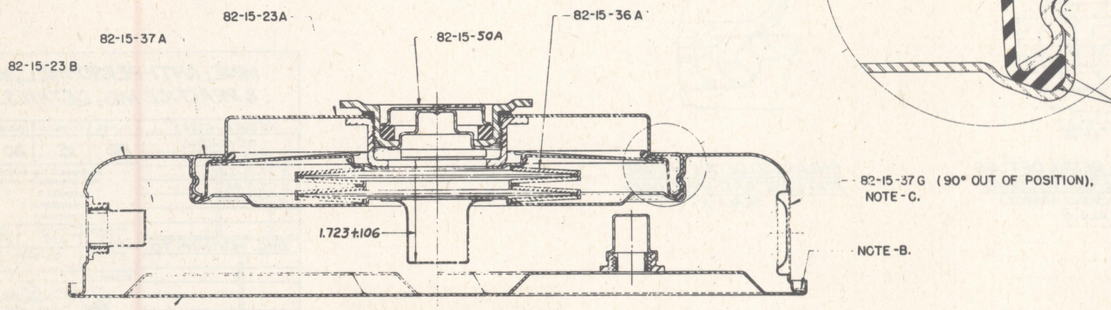
ORDNANCE DEPT. U.S.A.

PHYSICAL PROPERTIES	
Y.P.	
T.S.	
EL. 2	
RED	
BR	
ROCK	









SECTION A-A-A-A

ASSEMBLY 82-15-22A5

NOTES:

B– THIS CRIMP BY LOADER, BASE COVER LOOSELY ASSEMBLED TO BASE FOR SHIPPING.
C– CAP, CLOSING, PCMK 82-15-37G SHALL BE SHIPPED SEPARATELY.
D– CEMENT MOISTURE SEAL TO BASE WITH RUBBER CEMENT, COMMERCIAL, (OPTIONAL).

LINE NO.	LIST OF DRAWINGS	DRAWING NO.
1	METAL PARTS ASSEMBLY	82-15-22
2	LIST OF PARTS & LIST OF SPECS	82-15-22A
3	METAL PARTS ASSEMBLIES	82-15-23
4	METAL PARTS DETAILS	82-15-24
5	METAL PARTS DETAILS	82-15-25
6	METAL PARTS DETAILS	82-15-36
7	METAL PARTS DETAILS	82-15-37
8	METAL PARTS DETAILS	82-15-38
9	PLUG, ARMING, ASSEM & DETAILS	82-15-50
10	PLUG, ARMING, LIST OF PARTS & SPECS	82-15-50A

[redacted]

CLASSIFICATION CHANGED TO UNCLASSIFIED
BY AUTHORITY OF OCM 24-813
BY CAPT _____

0 1 2 3 4 5 6 7 8 9 10 11 INCHES
0 1 2 INCHES

MINE, AT, HE, HEAVY, M6A1.
METAL PARTS ASSEMBLY.

FEBRUARY 8, 1944

CLASS	DIVISION	DRAWING	FILE
82	15	22	

REVISIONS

1	3-25-44
2	4-26-44
3	8-5-44
4	8-24-44
5	4-19-48

TOLERANCE ON DIMENSIONS NOT OTHERWISE SPECIFIED
DECIMAL ±
FRACTIONAL ±
ANGULAR ±

DRAWN J.O.S. CHECKED

DRG. PERTAINS TO

82-0-129
75-14-437

D

SUBMITTED: P. L. Chamberlain, Lt. Col., ORD. DEPT. U.S.A.
EXAMINED: W. W. Gelli, Col., ORD. DEPT. U.S.A.
APPROVED BY ORDER OF THE CHIEF OF ORDNANCE: A. G. Lukes, Col., ORD. DEPT. U.S.A.

ORDNANCE DEPT. U.S.A.

LIST OF PARTS

LINE NO.	NAME OF PART	NUMBER REQD PER ASSEMBLY	PIECE MARK	MATERIAL: SIZE OR FORM	MATERIAL: KIND	MATERIAL: GRADE	MATERIAL: SPEC NUMBER	APPROXIMATE UNIT WEIGHT (POUNDS)	APPROX GROSS WT OF RAW STOCK PER 1000 ASSEMBLIES	REMARKS
1	METAL PARTS ASSEMBLY		82-15-22A				50-86-5	7.63		
2	BASE ASSEMBLY		82-15-23B							(e)
3	BASE COVER ASSEMBLY		82-15-23C							(e)
4	BELLEVILLE SPRING ASSEMBLY		82-15-36A					1.09		
5	PRESSURE PLATE ASSEMBLY		82-15-23A							
6	HANDLE ASSEMBLY		82-15-37B					.18		
7	ARMING PLUG ASSEMBLY	1	82-15-50A					.38		
8										
9	BASE	1	82-15-24A	SHEET	STEEL, COLD ROLLED	WD 1010	57-136	2.31		(e)
10	BUSHING, ACTIVATOR	2	82-15-37E	BAR	STEEL, COLD ROLLED	FS 1112	QQ-S-671	.03		(c)(g)(h)
11	BUSHING, PRESSURE PLATE	1	82-15-25E	STRIP	STEEL, COLD ROLLED	WD 1010	57-136	.30		(g)(h)
12	BUSHING, ACTIVATOR (ALTERNATIVE)		82-15-38A	BAR	STEEL, COLD ROLLED	FS 1010 TO FS 1020	QQ-S-671			(g)(h)
13										
14										
15	CAP, CLOSING	1	82-15-37G	STRIP	STEEL, COLD ROLLED ANNEALED	WD1010	57-136	.02		(d)(g)
16	CLIP, SLIDE HANDLE	1	82-15-37C	STRIP	STEEL, COLD ROLLED	WD1010	57-136	.07		(g)
17	COVER, BASE	1	82-15-24B	SHEET	STEEL, COLD ROLLED	WD1010	57-136	1.56		(e)
18	COVER, PRESSURE PLATE	1	82-15-25A	STRIP	STEEL, COLD ROLLED	WD1020 or WD1030	57-136	.52		(e)
19	CUP, ACTIVATOR	2	82-15-37F	STRIP	STEEL, COLD ROLLED	WD1010	57-136	.01		(e)(h)
20	CUP, FUZE WELL (M6A1)	1	82-15-37D	STRIP	STEEL, COLD ROLLED	WD1010	57-136	.04		(e)
21										
22	CUP, ACTIVATOR (ALTERNATIVE)		82-15-38B	STRIP	STEEL, COLD ROLLED	WD1010	57-136			(e)
23										
24										
25										
26	GRIP, HANDLE	1	82-15-37L	STRIP	STEEL, COLD ROLLED	WD1010 TO WD1020	57-136	.04		(g)
27										
28	HANDLE	1	82-15-37M	WIRE	STEEL	FS 1020 TO FS 1035	QQ-W-461	.09		(g)
29										
30										
31										
32	PLATE, PRESSURE	1	82-15-25B	STRIP	STEEL, COLD ROLLED	WD 1010	57-136	.60		(e)
33										
34										
35										
36										
37	RING, RETAINER	1	82-15-37A	STRIP	STEEL, COLD ROLLED	WD1010	57-136	.45		(f)
38										
39										
40										
41	SEAL, MOISTURE	1	82-15-25C		RUBBER, SYNTHETIC, MOLDED	RS 615 ABF	20-116	.08		(a)
42	SLEEVE, SHIPPING	2	82-15-37K	TUBE	CARDBOARD		COMMERCIAL	.01		
43	SPACER, BELLEVILLE SPRING END	1	82-15-36D	STRIP	STEEL, COLD ROLLED	WD 1010 or WD1020	57-136	.01		(g)
44	SPACER, BELLEVILLE SPRING OUTSIDE	2	82-15-36E	STRIP	STEEL, COLD ROLLED	WD 1010 or WD1020	57-136	.03		(g)
45	SPACER, BELLEVILLE SPRING INSIDE	1	82-15-36C	STRIP	STEEL, COLD ROLLED	WD 1010 or WD1020	57-136	.01		(g)
46	SPRING, BELLEVILLE, METALLIC	4	82-15-36B	STRIP	STEEL, SPRING, ANNEALED	WD1070 TO WD1085	57-136	.25		(f)
47										
48	SPACER, BELLEVILLE SPRING, TOP	1	82-15-36G	STRIP	STEEL, COLD ROLLED	WD1010 or WD1020	57-136	.01		(g)
49										
50										
51					CEMENT, RUBBER		COMMERCIAL			
52					ENAMEL, BAKING, PHENOL-OR					
53					UREA-FORMALDEHYDE		3-191			(b)
54					INK, STENCIL, BLACK		TT-I-558			
55										
56										
57					PRIMER, SYNTHETIC, LACQUER RESIST	TYPE II	JAN-P-72			
58										
59										
60										
61										

NOTES:-
(a) ALTERNATIVE MATERIAL:-NEOPRENE TYPE FR. DUROMETER HARDNESS 55 TO 65, NOT TO EXCEED 75 AT -40° F.
(b) 24 HOURS RESISTANCE TO 20% SALT SPRAY SOLUTION REQUIRED.
(c) ALTERNATIVE MATERIAL:- STEEL, STRIP, WD 1010, SPEC 57-136.

LIST OF SPECIFICATIONS

LINE NO.		* SPEC. NUMBER	REQUIRED BY
1			
2	AMMUNITION, EXCEPT SMALL ARMS AMMUNITION, GEN SPEC FOR	50-0-1	DRG 82-15-22
3			
4			
5	ENAMEL, BAKING, PHENOL-OR UREA-FORMALDEHYDE	3-191	DRG 82-15-36
6			
7			
8	FINISHES, PROTECTIVE, FOR IRON AND STEEL PARTS	57-0-2	DRG 82-15-22
9			
10	INK, STENCIL	TT-I-558	DRG 82-15-23
11			
12	METAL, GENERAL SPECIFICATION FOR INSPECTION OF	QQ-M-151	QQ-S-671
13	MINE, AT, HE, HEAVY, M6A1, METAL PARTS FOR	50-86-5	DRG 82-15-22
14			
15	PRIMER, SYNTHETIC, LACQUER RESISTING (FOR AMMUNITION)	JAN-P-72	DRG 82-15-23
16			
17	RUBBER GOODS, GENERAL SPECIFICATIONS	ZZ-R-601	20-116
18	RUBBER AND SYNTHETIC RUBBER FOR GENERAL MECHANICAL,		
19	AERONAUTICAL, AND AUTOMOTIVE APPLICATION (EXCEPT TIRES)	20-116	DRG 82-15-25
20	STANDARD SPECIFICATION FOR MARKING SHIPMENTS	100-2	DRG 82-15-22
21	STEEL; CARBON AND ALLOY, BARS	QQ-S-671	DRG 82-15-37
22	STEEL SHEETS AND STRIPS, CARBON AND ALLOY	57-136	DRG 82-15-37
23			
24	WIRE, STEEL, (CARBON) BARE AND ZINC COATED	QQ-W-461	DRG 82-15-37
25			

PHYSICAL PROPERTIES: Y.P. | T.S. | EL. 2 | RED. | BR. | ROCK

* THE SPECIFICATION NUMBERS SHOWN ARE BASIC NUMBERS ONLY. WHEN A SPECIFICATION IS REVISED A LETTER IS AFFIXED TO ITS BASIC NUMBER. SPECIFICATIONS REFERRED TO IN THESE SPECIFICATIONS AND NOT LISTED HEREON, SHALL NOT APPLY.

NOTES:
(d) ALTERNATIVE:-MAY BE FORMED FROM ZINC PRECOATED SHEET STEEL. ABSENCE OF COATING ON TRIMMED EDGE PERMITTED.
(e) FOR APPLICATION OF PROTECTIVE FINISHES AND COATINGS, SEE DRG 82-15-23.
(f) PROTECTIVE FINISH, TYPE II, CLASS C, SPEC 57-0-2.
(g) PROTECTIVE FINISH, TYPE I, CLASS RS OR RSC, SPEC 57-0-2.
(h) PROTECTIVE FINISH, TYPE I, CLASS RS, SPEC 57-0-2.

[redacted]

CLASSIFICATION CHANGED TO UNCLASSIFIED
BY AUTHORITY OF OCM 24813
BY CAPT._____

MINE, AT, HE, HEAVY, M6A1. METAL PARTS ASSEMBLY. LIST OF PARTS & LIST OF SPECIFICATIONS.

FEBRUARY 8, 1944

REVISIONS		CLASS	DIVISION	DRAWING	FILE
1	3-25-44	82	15	22A	
2	4-26-44				
3	8-5-44				
4	8-24-44				
5	4-19-48				

TOLERANCE ON DIMENSIONS NOT OTHERWISE SPECIFIED
DECIMAL ±
FRACTIONAL ±
ANGULAR ±

D'FTSMAN: J.N.S. | TRACER: L.H.R. | DES. ENGINEER: KL | CHECKER | MFG. ENGINEER

DRG. PERTAINS TO

75-14-437
82-0-129

SUBMITTED:- P. L. Christensen, MAJ., ORD. DEPT., U.S.A.

EXAMINED:- H. W. Holler, COL., ORD. DEPT., U.S.A.

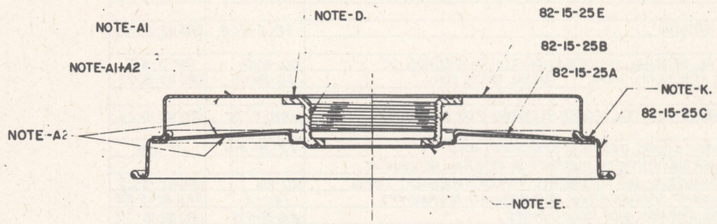
APPROVED BY ORDER OF THE CHIEF OF ORDNANCE:- A. G. Lukie, COL., ORD. DEPT., U.S.A.

D

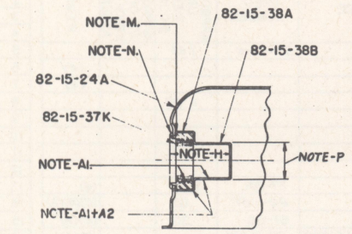
ORDNANCE DEPT., U.S.A.

HEAT TREATMENT AND FINAL FINISH

PHYSICAL PROPERTIES	
Y.P.	
T.S.	
EL. 2	
RED.	
BR.	
ROCK.	



PRESSURE PLATE ASSEMBLY 82-15-23 A5



ACTIVATOR CUP AND BUSHING, (ALTERNATIVE)
METHOD OF ASSEMBLING TO BASE OR BASE COVER.

NOTES:

A- COATING APPLIED TO THIS SURFACE SHALL BE:
1- PHOSPHATE COATING, TYPE II, CLASS C, SPEC 57-0-2.
2- PRIMER, SYNTHETIC, LACQUER RESISTING, TYPE II, SPEC JAN-P-72 (OPTIONAL ON ZINC PLATED SURFACES).

B- ECCENTRICITY BETWEEN THREADS OF ACTIVATOR BUSHING AND INSIDE OF ACTIVATOR CUP .005 INCH MAXIMUM.

C- PROJECTION WELD, ALTERNATIVE- SIX SPOT WELDS EQUALLY SPACED.

D- 360° SEAM WELD OR BRAZE.

E- PROJECTION WELD.

G- 1.111 INCH MAXIMUM, 1.095 INCH MINIMUM.

H- 1.031 INCH MINIMUM.

K- CEMENT MOISTURE SEAL TO PRESSURE PLATE WITH RUBBER CEMENT, COMMERCIAL OPTIONAL.

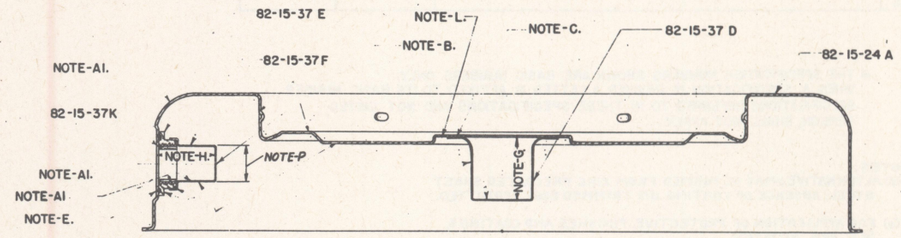
L- MARK WITH $\frac{1}{4}$ HIGH LETTERS, USING BLACK STENCIL INK, SPEC TT-I-558.

M- CRIMP ACTIVATOR CUP 360° TO ACTIVATOR BUSHING.

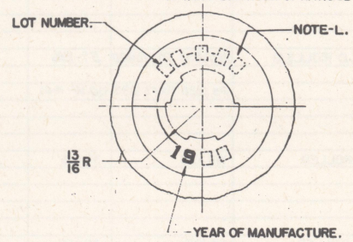
N- CRIMP ACTIVATOR BUSHING 360° TO BASE OR BASE COVER.

P- OUTSIDE DIAMETER OF ACTIVATOR CUP (AFTER ASSEMBLY) .652 MAX.

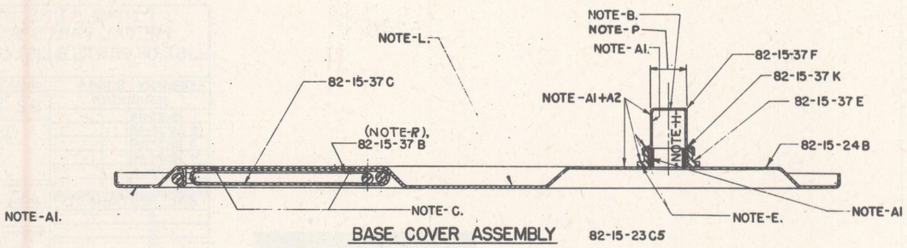
R- VARY LOCATION OF HANDLE AT RANDOM WITH RESPECT TO ACTIVATOR BUSHING IN BASE COVER ASSEMBLY.



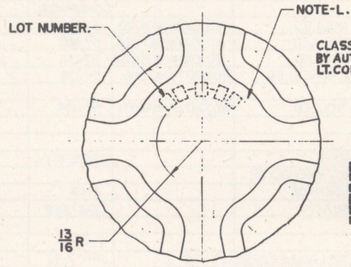
BASE ASSEMBLY 82-15-23 B5



BASE MARKING DIAGRAM

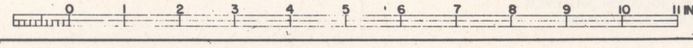


BASE COVER ASSEMBLY 82-15-23 C5



BASE COVER MARKING DIAGRAM

CLASSIFICATION CHANGED TO UNCLASSIFIED BY AUTHORITY OF OCM NO. 24813 BY LT. COL. [redacted] DATE NOV. 16, 1944



MINE, AT, HE, HEAVY, M6 A1. METAL PARTS ASSEMBLIES

REVISIONS	
1	3-25-44
2	4-26-44
3	8-24-44
4	11-16-44
5	4-19-45

FEBRUARY 8, 1944

CLASS	DIVISION	DRAWING	FILE
82	15	23	

TOLERANCE ON DIMENSIONS NOT OTHERWISE SPECIFIED
DECIMAL ±
FRACTIONAL ±
ANGULAR ±

DRAFTSMAN R.S.R. | TRACER L.H.R. | ORD. ENGINEER [redacted] | CHECKER | PRINCIPAL ENGINEER [redacted]

DRG. PERTAINS TO

82-15-22

SUBMITTED: P. L. Christensen, MAJ., ORD. DEPT. U.S.A.

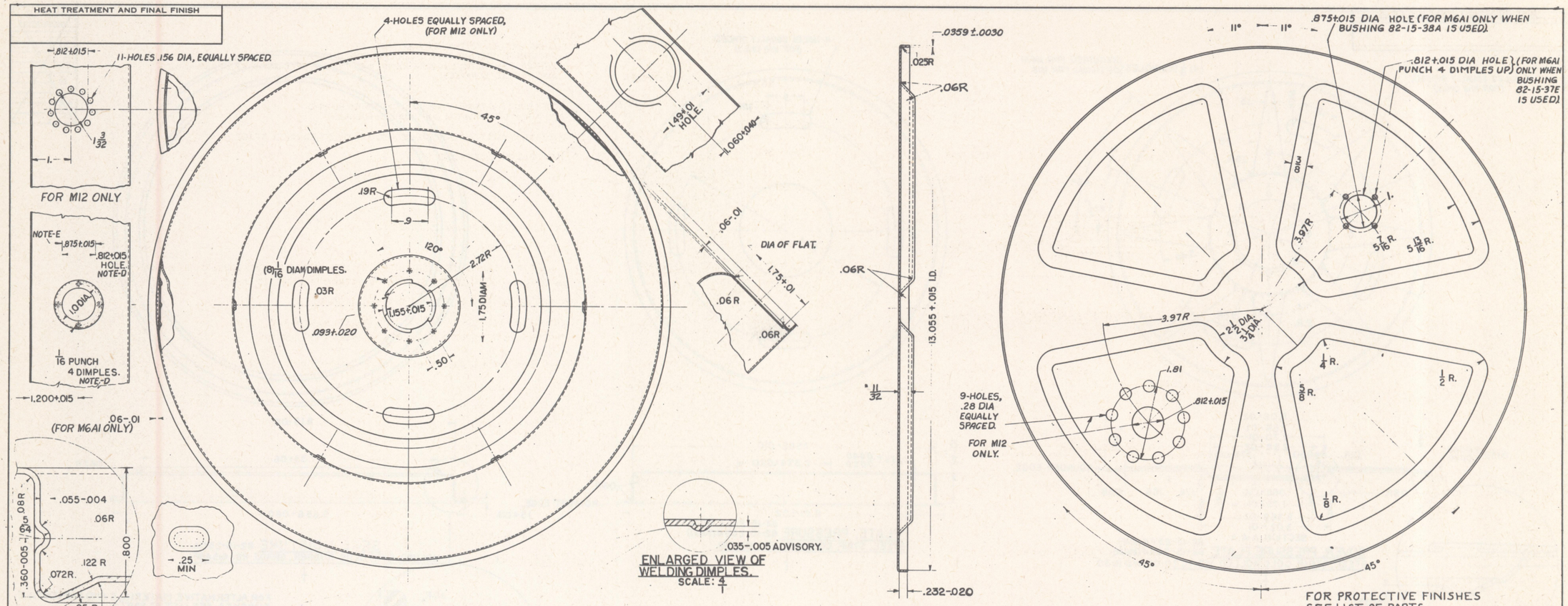
EXAMINED: [redacted], COL., ORD. DEPT. U.S.A.

APPROVED BY ORDER OF THE CHIEF OF ORDNANCE: [redacted], COL., ORD. DEPT. U.S.A.

D

ORDNANCE DEPT. U.S.A.

HEAT TREATMENT AND FINAL FINISH



82-15-24C4 (M12)
82-15-24A4 (M6AI)
BASE, STEEL, SHEET, COLD ROLLED WD1010
SCALE: 1

COVER, BASE 82-15-24D4 (M12) 82-15-24B4 (M6AI)
STEEL, SHEET, COLD ROLLED WD1010
SCALE: 1

NOTES:
A- REMOVE ALL BURRS.

NOTE C- OVALITY PERMITTED PROVIDED THE SUM OF MAJOR AND MINOR DIAMETERS DOES NOT EXCEED 25.300 AND IS NOT LESS THAN 25.230 WITH A MAXIMUM PERMISSABLE DIFFERENCE, OF .065 BETWEEN MAJOR AND MINOR DIAMETERS.
D- FOR M6AI ONLY WHEN BUSHING 82-15-37E IS USED.
E- FOR M6AI ONLY WHEN BUSHING 82-15-38A IS USED.

CLASSIFICATION CHANGED TO UNCLASSIFIED BY AUTHORITY OF OCM 24813. BY CAPT----------

[redacted]

MINE, AT, HE, HEAVY, M6AI AND MINE, AT, HEAVY, PRACTICE, M12. METAL PARTS DETAILS.

FEBRUARY 8, 1944.

REVISIONS				
1	3-25-44			
2	4-26-44			
3	8-24-44			
4	4-19-48			

CLASS	DIVISION	DRAWING	FILE
82	15	24	

TOLERANCE ON DIMENSIONS NOT OTHERWISE SPECIFIED
DECIMAL ± .010
FRACTIONAL ± 1/32
ANGULAR ± 1°

DFTSMAN	TRACER	CHIEF ENGINEER
L.H.R.	L.H.R.	

CHECKER — C.O. — ASST. CHIEF ENGINEER

DRG. PERTAINS TO

82-15-23	
82-15-23	M6AI
82-15-47	M12

SUBMITTED: P. L. Christensen, MGA, ORD DEPT. U.S.A.

EXAMINED: W. H. Holle, COL., ORD. DEPT. U.S.A.

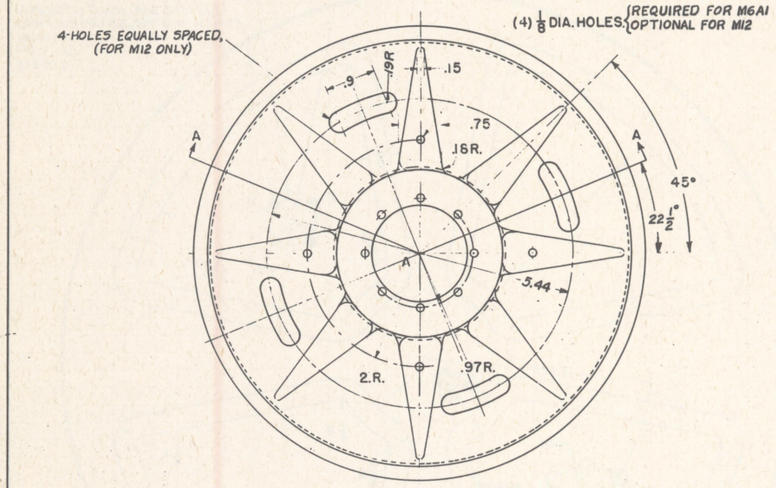
APPROVED BY ORDER OF THE CHIEF OF ORDNANCE: H. A. Luke, COL., ORD. DEPT. U.S.A.

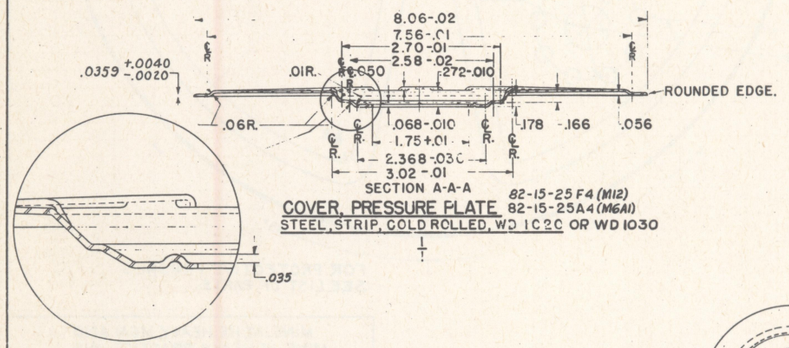
D

ORDNANCE DEPT., U.S.A.

HEAT TREATMENT AND FINAL FINISH

PHYSICAL PROPERTIES	
Y.P.	
T.S.	
EL. 2	
RED	
BR.	
ROCK.	

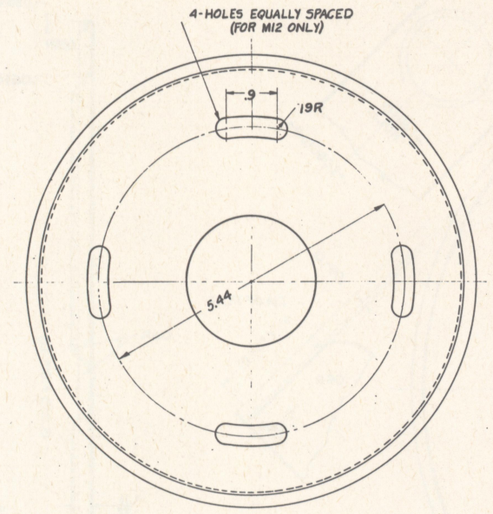


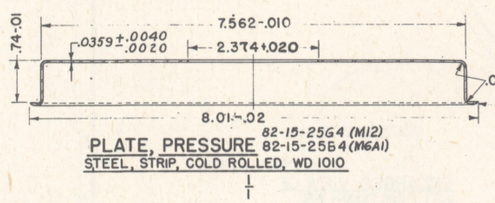


SECTION A-A-A

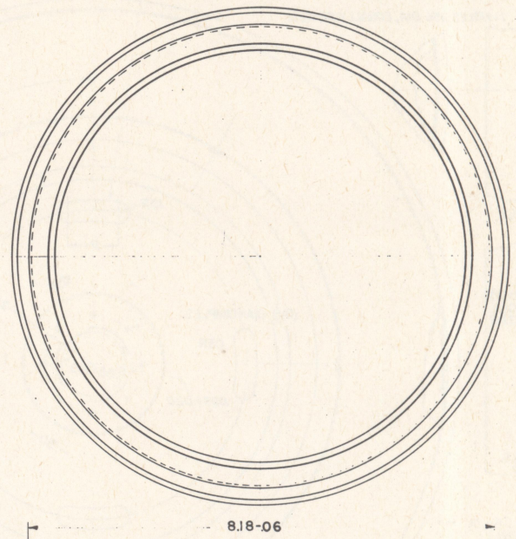
SECTION ENLARGED
4
1

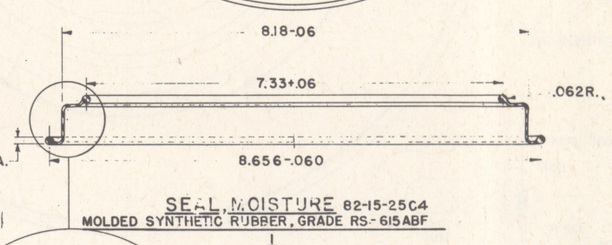
COVER, PRESSURE PLATE 82-15-25 F4 (M12)
82-15-25A4 (M6A1)
STEEL, STRIP, COLD ROLLED, WD 1020 OR WD 1030
1



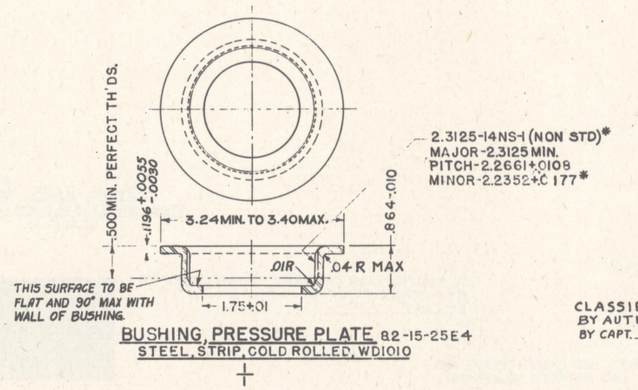


PLATE, PRESSURE 82-15-25B4 (M6A1)
82-15-25G4 (M12)
STEEL, STRIP, COLD ROLLED, WD 1010
1

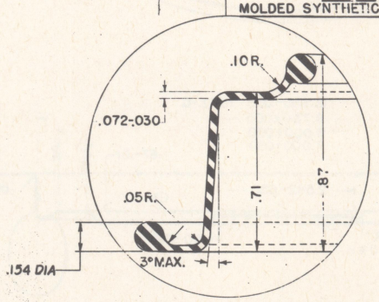




SEAL, MOISTURE 82-15-25C4
MOLDED SYNTHETIC RUBBER, GRADE RS-615ABF
1



BUSHING, PRESSURE PLATE 82-15-25E4
STEEL, STRIP, COLD ROLLED, WD1010
1



SECTION ENLARGED
1
1

FOR ALTERNATIVE MATERIALS AND PROTECTIVE FINISHES, SEE LIST OF PARTS.

CLASSIFICATION CHANGED TO UNCLASSIFIED
BY AUTHORITY OF OCM 24813.
BY CAPT. _____

REMOVE ALL BURRS.

[redacted]

MINE, AT, HE, HEAVY, M6A1 AND MINE, AT, HEAVY, PRACTICE, M12, METAL PARTS DETAILS.

FEBRUARY 8, 1944

CLASS	DIVISION	DRAWING	FILE
82	15	25	

REVISIONS

1	3-25-44
2	4-4-44
3	8-24-44
4	4-19-48

TOLERANCE ON DIMENSIONS NOT OTHERWISE SPECIFIED
DECIMAL ± .01
FRACTIONAL ± 1/32
ANGULAR ±1°

DRAFTSMAN L.E.B. | TRACER L.E.B. | CHECKER | PRINCIPAL ENGINEER

DRG. PERTAINS TO

82-15-23	M6A1
82-15-47	M12

SUBMITTED: P. L. Christensen, MAJ., ORD. DEPT., U. S. A.

EXAMINED: W. W. Holder, COL., ORD. DEPT., U. S. A.

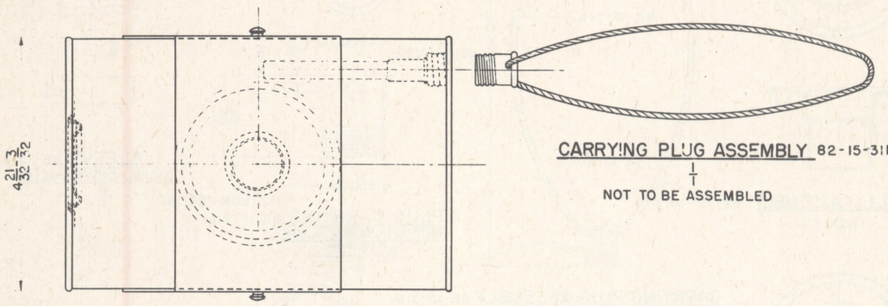
APPROVED BY ORDER OF THE CHIEF OF ORDNANCE: H. G. Rutherford, COL., ORD. DEPT., U. S. A.

D

ORDNANCE DEPT., U. S. A.

HEAT TREATMENT AND FINAL FINISH

LINE NO.	LIST OF DRAWINGS	DRAWING NUMBERS
1	METAL PARTS ASSEMBLY AND	
2	LIST OF PARTS & LIST OF SPECS.	82-15-30
3	DETAILS	82-15-31
4	DETAILS	82-15-32
5	ASSEMBLY	82-0-114
6		



METAL PARTS ASSEMBLY 82-15-30A3

SCALE 1/1

CLASSIFICATION CHANGED TO UNCLASSIFIED BY AUTHORITY OF O.C.M. 25174 BY LT. COL. [illegible] DATE NOV. 14, 1944

LIST OF PARTS

LINE NO.	NAME OF PART	NUMBER REQ'D. PER COMPONENT	PIECEMARK	MATERIAL: SIZE OR FORM	MATERIAL: KIND	MATERIAL: GRADE	MATERIAL: SPEC. NUMBER	APPROXIMATE UNIT WEIGHT (GRAINS)	APPROX. GROSS WT. LBS. OF RAW STOCK PER 100 ASSEMBLIES	REMARKS
1	METAL PARTS ASSEMBLY		82-15-30A				AXS-1177			
2	ACTIVATOR WELL ASSEMBLY		82-15-32E							
3	BODY ASSEMBLY		82-15-31A							
4	FUZE WELL ASSEMBLY		82-15-31B							
5	STRIKER PLATE ASSEMBLY		82-15-32A					2338.6		
6	CARRYING PLUG ASSEMBLY	1	82-15-31M					164.3	2.35	
7	ADAPTER, ACTIVATOR WELL	1	82-15-32G	SHEET	TIN PLATE, 100# PER BASE BOX		QQ-I-706	27.2	.64	
8	ADAPTER, FUZE WELL	1	82-15-31C	SHEET	TERNE PLATE		QQ-T-191	189.5	4.3	a-e
9										
10	BODY, (CONTAINER #77)	1	82-15-31E	SHEET	TERNE PLATE		QQ-T-191	1659.2	29.06	a-e
11	BOTTOM, (CONTAINER #77)	1	82-15-31G	SHEET	TERNE PLATE			332.5	5.4	a-e
12										
13	CAP, (CONTAINER #77) CLOSING	1	82-15-32H	SHEET	TERNE PLATE		QQ-T-191	79.8	1.7	a-e
14	CUP, FUZE WELL	1	82-15-31D	SHEET	TERNE PLATE		QQ-T-191	153.3	3.4	e
15	HANDLE	1	82-15-31K	CORD	IRON, GALVANIZED, SASH		COMMERCIAL	104.0	1.49	
16	PLATE, STRIKER	1	82-15-32B	STRIP	STEEL, COLD ROLLED, HALF HARD	WD-1010	57-136	2262.4	34.5	a
17	PLUG, CARRYING	1	82-15-31L	SHEET	TERNE PLATE		QQ-T-191	34.3	.49	
18										
19	RETAINER, IMPACT RUBBER	1	82-15-32D	STRIP	STEEL, COLD ROLLED, TEMPER #4	WD-1010	57-136	34.8	1.1	a
20	RIVET, (CONTAINER #77)	2	82-15-32K	ROD	STEEL		COMMERCIAL	14.2-EA	.24	
21	RUBBER, IMPACT	1	82-15-32C	SHEET	RUBBER, SYNTHETIC		20-116	26.4		
22	SLEEVE	1	82-15-31H	TUBE	NICKEL-COPPER-ALLOY		QQ-N-281	26.0	.37	
23	TOP, (CONTAINER #77)	1	82-15-31F	SHEET	TERNE PLATE		QQ-T-191	287.2	5.4	a-e
24										
25	WASHER, (CONTAINER #77) RIVET	2	82-15-32L	STRIP	STEEL		COMMERCIAL	13.3-EA	.3	
26	WELL, ACTIVATOR	1	82-15-32F	STRIP	GILDING METAL		57-171-2	60.7	1.5	d
27										
28										
29					BAKED OLIVE DRAB ENAMEL		3-181			
30					FINISHES-PROTECTIVE	TYPE I FINISH #5	57-0-2			
31					INK, MARKING, YELLOW		36-2			b
32					LACQUER, LUSTRELESS, ENAMEL, OLIVE DRAB	II	3-162			c
33					SEMI-GLOSS VARNISH					
34					SIZING		COMMERCIAL			
35					SOLDER, ACID PROOF					
36					PAINT, ACID PROOF, BLACK, FOR AMM.		3-106			

a - OLIVE DRAB FINISH TO HAVE MAXIMUM GLOSS OF 30 WHEN MEASURED ON A GARDNER 60° GLOSS METER (SEE c)
b - ALTERNATIVE MATERIAL:- BLACK STENCIL PAINT TYPE I OR II, SPEC. 3-179
c - ALTERNATIVE MATERIAL:- OLIVE DRAB LUSTRELESS ENAMEL, GRADE II, SPEC. 3-67
d - ALTERNATIVE MATERIAL:- GILDING METAL (90-10 BRASS) COMMERCIAL
e - SPEC. QQ-T-191 EXCEPT SHALL PERMIT 107# TERNE PLATE, 6 TO 8 LBS. COATING PER DOUBLE BASE BOX.

[redacted]

LINE NUMBER	LIST OF SPECIFICATIONS	SPEC. NO. *	REQUIRED BY
1	AMMUNITION, EXCEPT SMALL ARMS AMM., GENERAL SPECIFICATIONS FOR	50-0-1	AXS-1177
2			
3	ENAMEL, OLIVE DRAB, RUST-INHIBITING	3-181	DRG. 82-15-31
4	LACQUER, ENAMEL, LUSTRELESS	3-162	DRG. 82-15-30
5	ENAMEL, LUSTRELESS, QUICK-DRYING	3-67	DRG. 82-15-30
6	FINISHES, PROTECTIVE, FOR IRON AND STEEL PARTS	57-0-2	DRG. 82-15-32
7	INK, MARKING (FOR MARKING AMMUNITION)	36-2	DRG. 82-15-31
8	PAINT, STENCIL	3-179	DRG. 82-15-30
9	METAL, GILDING (95/5 BRASS) SHEETS AND STRIPS	57-171-2	DRG. 82-15-32
10			
11	MINE, AT, HE, LIGHT, M7A1, METAL PARTS FOR	AXS-1177	DRG. 82-15-30
12	NICKEL-COPPER ALLOY- FORGINGS PLATES, RODS, SHAPES, SHEETS, ETC.	QQ-N-281	DRG. 82-15-31
13	PAINTS & RELATED MATERIALS, GENERAL SPECIFICATIONS FOR	3-1	DRG. 82-15-31
14	RUBBER, SYNTHETIC RUBBER, ETC.	20-116	DRG. 82-15-32
15	PAINT, ACID-PROOF, BLACK, FOR AMMUNITION	3-106	DRG. 82-15-31
16	SOLDER, ACID PROOF		DRG. 82-15-32
17	STEEL, CARBON AND ALLOY, SHEETS & STRIPS	57-136	DRG. 82-15-32
18			
19	TERNE PLATE	QQ-T-191	DRG. 82-15-31
20	IRON AND STEEL, SHEET, TINNED (TIN-PLATE)	QQ-I-706	DRG. 82-15-32

* THE SPECIFICATION NUMBERS SHOWN ARE BASIC NUMBERS ONLY. WHEN A SPECIFICATION IS REVISED A LETTER IS AFFIXED TO ITS BASIC NUMBER. SPECIFICATIONS REFERRED TO IN THESE SPECIFICATIONS AND NOT LISTED HEREON, SHALL NOT APPLY.

MINE, A T, HE, LIGHT, M7A1, METAL PARTS ASSEMBLY

FEB 3, 1944

CLASS	DIVISION	DRAWING	FILE
82	15	30	

REVISIONS

1	7-11-44		
2	11-14-44		
3	8-15-45		

TOLERANCE ON DIMENSIONS NOT OTHERWISE SPECIFIED
DECIMAL ±
FRACTIONAL ±
ANGULAR ±

DRG. PERTAINS TO 82-0-114

DFTSMAN	TRACER	ORD. ENGINEER
	L.E.B.	

CHECKER	O.C.	PROJ. ENGINEER
A.A.T.		

SUBMITTED: Paul L. Christensen, MAJ, ORD. DEPT. U.S.A.

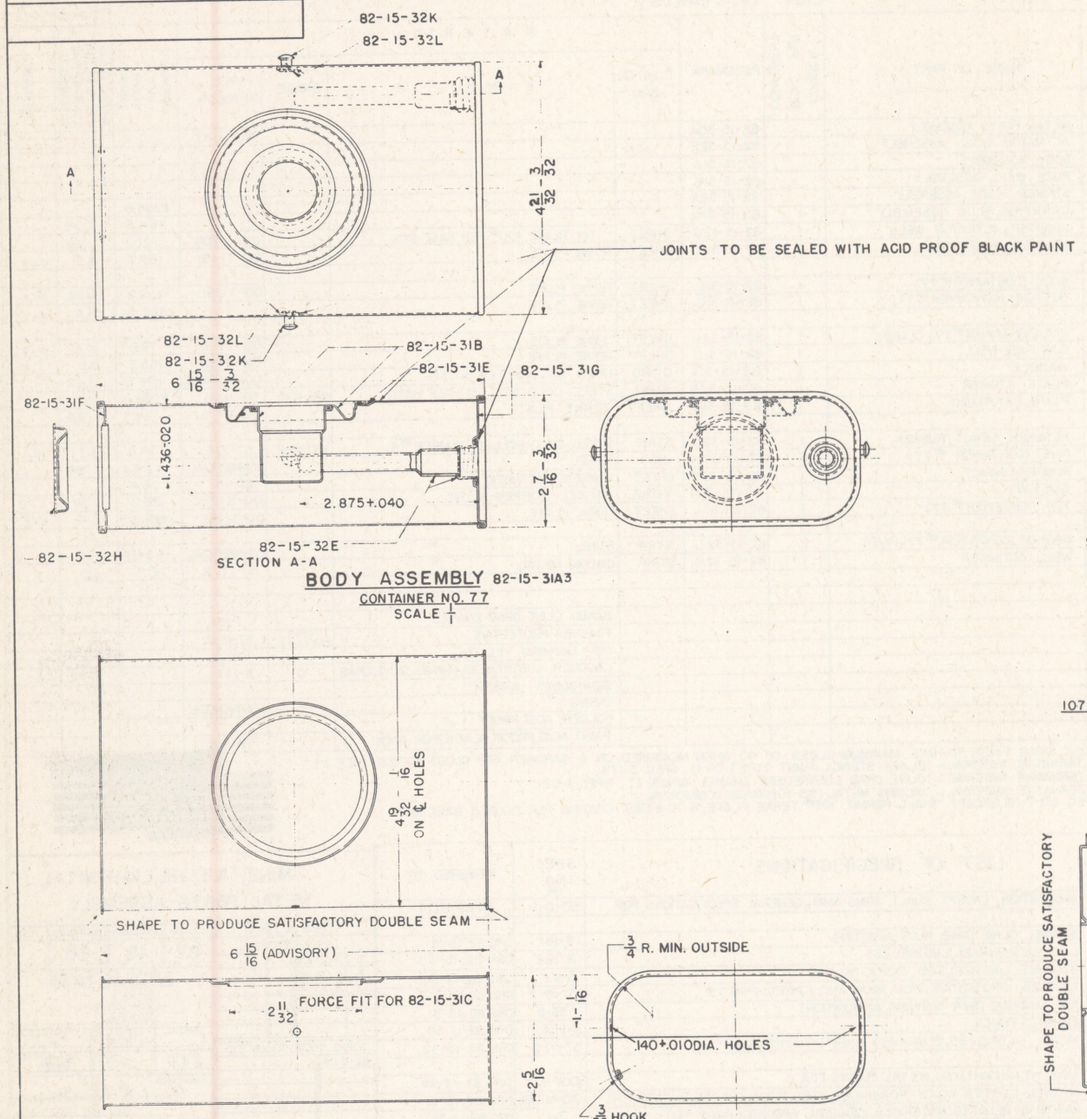
EXAMINED: [illegible], COL, ORD. DEPT. U.S.A.

APPROVED BY ORDER OF THE CHIEF OF ORDNANCE: [illegible], COL, ORD. DEPT. U.S.A.

D

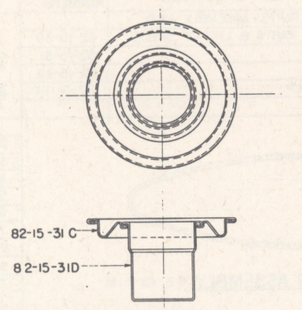
ORDNANCE DEPT., U.S.A.

HEAT TREATMENT AND FINAL FINISH

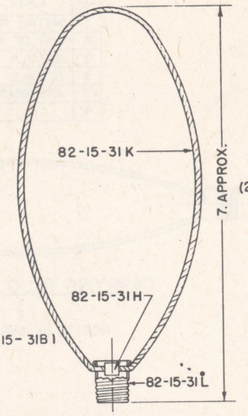


BODY ASSEMBLY 82-15-31A3
CONTAINER NO. 77
SCALE 1/1

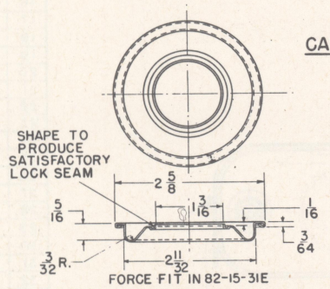
BODY 82-15-31E1
CONTAINER NO. 77
107 LB. TERNE PLATE, 6 TO 8 LBS. PER DOUBLE BASE BOX
FINISH OUTSIDE, AXS-1177
SCALE 1/1



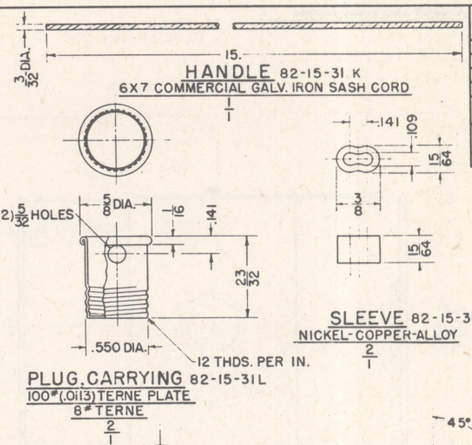
FUZE WELL ASSEMBLY 82-15-3181
SCALE 1/1



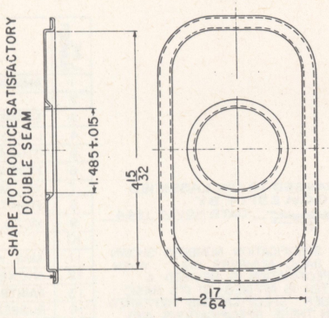
CARRYING PLUG ASSEMBLY 82-15-31M
FOR #77 CONTAINER
1/1



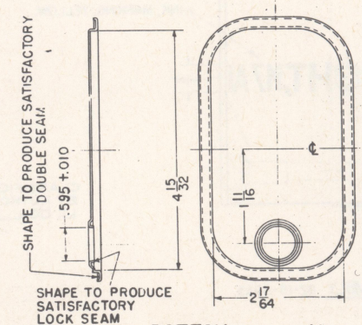
ADAPTER, FUZE WELL 82-15-31C
107 LB. TERNE PLATE, 6 TO 8 LBS. PER DOUBLE BASE BOX
FINISH OUTSIDE, AXS-1177
SCALE 1/1



CUP, FUZE WELL 82-15-31D
107 LB. TERNE PLATE, 6 TO 8 LBS. PER DOUBLE BASE BOX
FINISH INSIDE, AXS-1177
SCALE 1/1



TOP 82-15-31F
CONTAINER NO. 77
107 LB. TERNE PLATE, 6 TO 8 LBS. PER DOUBLE BASE BOX
FINISH OUTSIDE, AXS-1177
SCALE 1/1



BOTTOM 82-15-31G
CONTAINER NO. 77
107 LB. TERNE PLATE, 6 TO 8 LBS. PER DOUBLE BASE BOX
FINISH OUTSIDE, AXS-1177
SCALE 1/1

PHYSICAL PROPERTIES	
Y.P.	
T.S.	
EL. 2	
RED.	
BR.	
ROCK	

CLASSIFICATION CHANGED TO UNCLASSIFIED BY AUTHORITY OF O.C.M. 25174
LT. COL., [signature]
DATE NOV. 14, 1944

MINE, A.T., HE, LIGHT, M7A1, METAL PARTS DETAILS

FEB 3, 1944

REVISIONS			
1	7-11-44		
2	11-14-44		
3	8-15-45		

DRG. PERTAINS TO
82-15-30

CLASS	DIVISION	DRAWING	FILE
82	15	31	

TOLERANCE ON DIMENSIONS NOT OTHERWISE SPECIFIED
DECIMAL ±
FRACTIONAL ±
ANGULAR ±

D'PTSMAN	TRACER	CHIEF ENGINEER
	J.N.S.	KL
CHECKER		PRINC. ENGINEER
AAT		

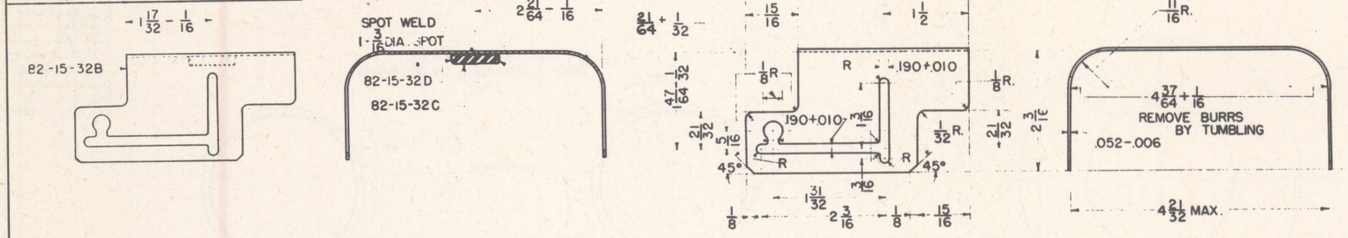
SUBMITTED: Paul L. Christensen, MAJ ORD. DEPT. U.S.A.
EXAMINED: W. W. Heiler, COL ORD. DEPT. U.S.A.
APPROVED BY ORDER OF THE CHIEF OF ORDNANCE: H. A. Luke, COL. ORD. DEPT. U.S.A.

D

ORDNANCE DEPT., U.S.A.

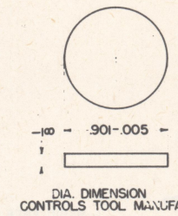
HEAT TREATMENT AND FINAL FINISH

SPUN OR DRAWN OVER TO RETAIN 82-15-32C

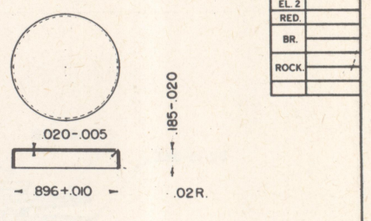


STRIKER PLATE ASSEMBLY 82-15-32A2
FINISH, AXS 1177
SCALE 1/1

PLATE, STRIKER 82-15-32B2
STEEL, WD1010, HALF HARD
SCALE 1/1



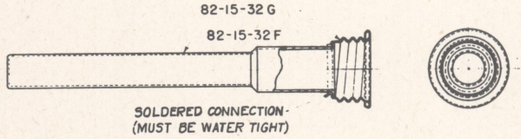
RUBBER, IMPACT 82-15-32C
RUBBER, SYNTHETIC
SCALE 2/1



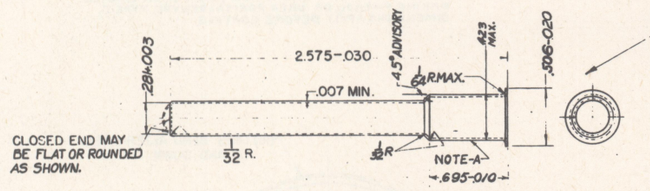
RETAINER, IMPACT RUBBER 82-15-32D
STEEL, WD1010, TEMPER NO. 4
SCALE 2/1

PHYSICAL PROPERTIES	
Y.P.	
T.S.	
EL. 2	
RED.	
BR.	
ROCK.	

NOTES:
A-ALLOWABLE ECCENTRICITY BETWEEN THREAD (.5625-12 NC-1) AND ANY POINT ALONG THE LENGTH OF INSIDE DIAMETERS (.281+.003 & .400+.003) OF WELL TO BE .006 (.012 INDICATOR READING).
B-MINIMUM DEPTH OF ACTIVATOR WELL ASSEMBLY TO BE GAGED FOR ECCENTRICITY, 2.870.

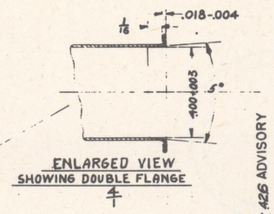


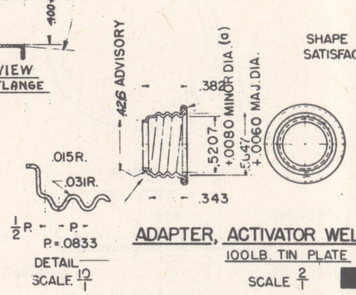
ACTIVATOR WELL ASSEMBLY 82-15-32E4
SCALE 2/1



WELL, ACTIVATOR 82-15-32F4
GILDING METAL, COMMERCIAL
SCALE 2/1

NOTE
A-THIS SURFACE MUST BE SMOOTH AND STRAIGHT OR TAPERED WITHIN TOLERANCES.



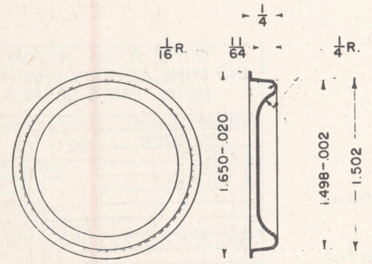


SHAPE TO PRODUCE SATISFACTORY LOCK SEAM

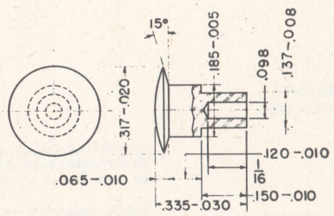
NOTES:-
(a) MUST BE MAINTAINED BY GAGING WITH PLAIN PLUG GAGE.
ROLLED THREAD TO FIT .5625-12 NC-1 GO THREAD GAGE.

ADAPTER, ACTIVATOR WELL 82-15-32G3
100LB TIN PLATE
SCALE 2/1

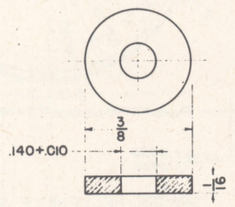
[redacted]



CAP, CLOSING 82-15-32H
107# TERNE PLATE, 6 TO 8 LBS. PER DOUBLE BASE BOX
FINISH OUTSIDE, AXS 1177
SCALE 2/1



RIVET, CONTAINER 82-15-32K1
STEEL, COMMERCIAL
TYPE I R.S. PLATING AND SPEC. 3-181 COATING
SCALE 5/1



WASHER, CONTAINER RIVET 82-15-32L1
STEEL, COMMERCIAL
TYPE I R.S. PLATING
SCALE 5/1

CLASSIFICATION CHANGED TO UNCLASSIFIED
BY AUTHORITY OF O.C.M. 25174
LT. COL., [redacted] DATE NOV. 14, 1944

MINE, AT, HE, LIGHT, M7 A1, METAL PARTS DETAILS

FEB. 3, 1944

REVISIONS		
1	7-11-44	
2	11-14-44	
3	3-15-45	
4	8-15-45	

DRG. PERTAINS TO
82-15-30

CLASS	DIVISION	DRAWING	FILE
82	15	32	

TOLERANCE ON DIMENSIONS NOT OTHERWISE SPECIFIED
DECIMAL ±
FRACTIONAL ± 1/64
ANGULAR ±

DFTSMAN	TRACER	ORD. ENGINEER
	LJR-LEB	KL
CHECKER		PROJ. ENGINEER
A.A.T.		[illegible]

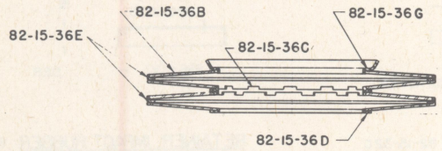
SUBMITTED: Paul L. Christensen, MAJ. ORD. DEPT. U.S.A.
EXAMINED: W. W. Hobler, COL. ORD. DEPT. U.S.A.
APPROVED BY ORDER OF THE CHIEF OF ORDNANCE: [illegible], COL. ORD. DEPT. U.S.A.

D

ORDNANCE DEPT., U.S.A.

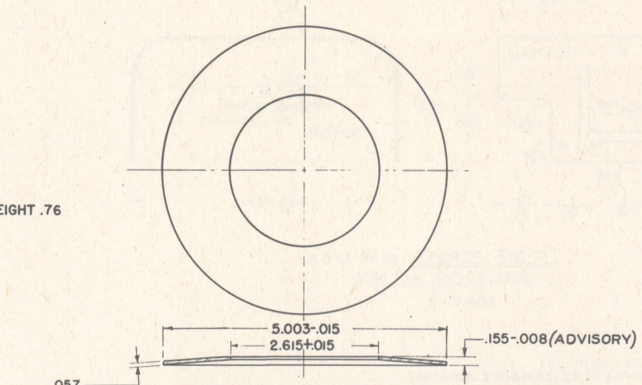
HEAT TREATMENT AND FINAL FINISH

PHYSICAL PROPERTIES	
Y.P.	
T.S.	
EL. 2"	
RED.	
BR.	
ROCK.	



BELLEVILLE SPRING ASSEMBLY 82-15-36A1

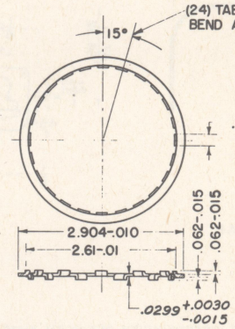
1/1



SPRING, BELLEVILLE METALLIC 82-15-36B3

STEEL., SPRING, WD1070 TO WD1085, ANNEALED

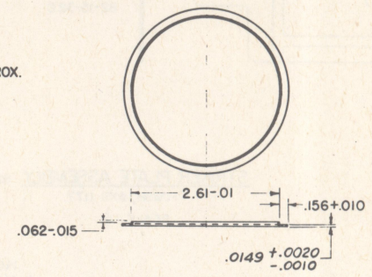
HEAT TREAT BEFORE OR AFTER FORMING. AFTER PHOSPHATE TREATMENT, COAT WITH ENAMEL BAKING, PHENOL, OR UREA FORMALDEHYDE, TYPE I. DIMENSIONS APPLY BEFORE COATING.



SPACER, BELLEVILLE SPRING, INSIDE 82-15-36C3

STEEL, WD1010 OR WD1020

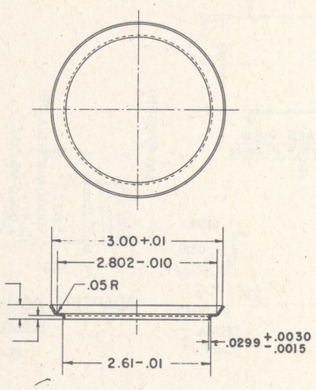
1/1



SPACER, BELLEVILLE SPRING, END 82-15-36D3

STEEL, WD1010 WD1020

1/1

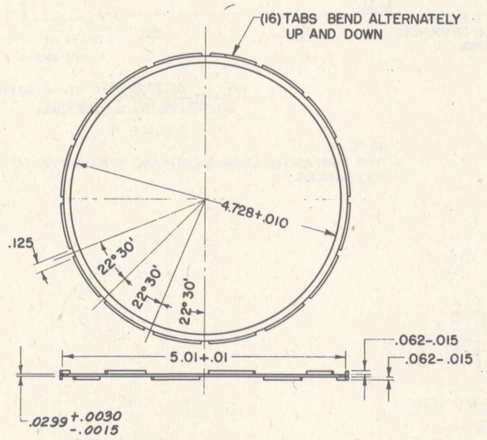


SPACER, BELLEVILLE SPRING, TOP 82-15-36G3

STEEL, WD1010 OR WD1020

1/1

REQUIREMENTS	
A	WITHIN 24 HOURS AFTER COATING, TREAT TO REMOVE EMBRITTLEMENT.
B	MAX. SOLID HEIGHT .333
C	MIN. FREE HEIGHT .724
D	LOAD AT .615 HEIGHT 150 LBS. MAX., 80 LBS. MIN.
E	LOAD AT .465 HEIGHT 175 LBS. MAX., 125 LBS. MIN.
F	LOAD AT .350 HEIGHT 225 LBS. MAX.
G	ALL LOADS AND HEIGHTS APPLY AFTER ASSEMBLY HAS BEEN COMPRESSED SOLID AND COMPLETELY RELEASED TO FREE HEIGHT.



SPACER, BELLEVILLE SPRING, OUTSIDE 82-15-36E3

STEEL, WD1010 OR WD 1020

1/1

REMOVE ALL BURRS.

CLASSIFICATION CHANGED TO UNCLASSIFIED BY AUTHORITY OF OCM 24813. BY CAPT. _____

FOR ALTERNATIVE MATERIALS AND PROTECTIVE FINISHES, SEE LIST OF PARTS.

[redacted]

MINE, AT, HE, HEAVY, M6A1 AND MINE, AT, HEAVY, PRACTICE, (M12) METAL PARTS DETAILS.

FEBRUARY 8, 1944

REVISIONS				
1	3-25-44			
2	8-24-44			
3	4-19-48			

DRG. PERTAINS TO	
82-15-22	M6A1
82-15-44	M12

CLASS	DIVISION	DRAWING	FILE
82	15	36	

TOLERANCE ON DIMENSIONS NOT OTHERWISE SPECIFIED
DECIMAL ± .010
FRACTIONAL ± 1/32
ANGULAR ± 1°

DFTSMAN	TRACR	ORD. ENGINEER
F.W.K.	L.E.B.	K.L.
CHECKED	U.S. PRIME MV ENGINEER	

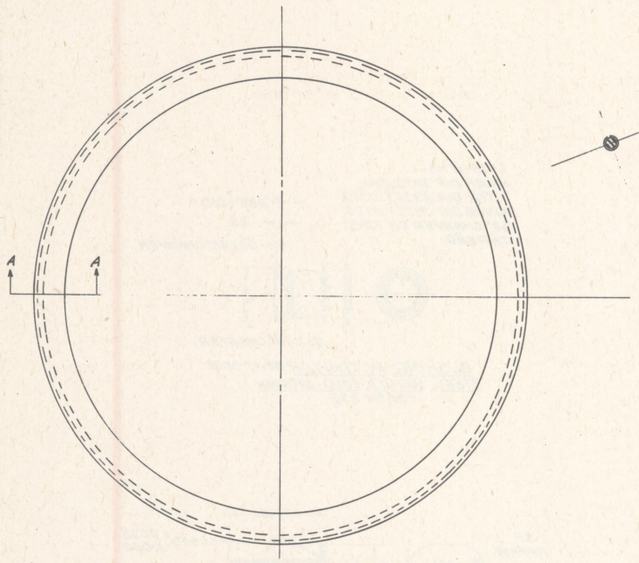
SUBMITTED: S. L. Christensen, MAJ., ORD. DEPT. U.S.A.

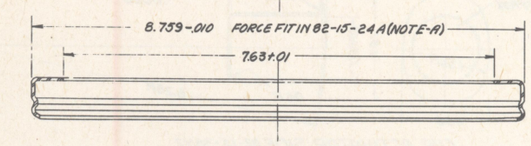
EXAMINED: W. H. Holler, COL., ORD. DEPT. U.S.A.

APPROVED BY ORDER OF THE CHIEF OF ORDNANCE: A. G. Lukes, COL., ORD. DEPT. U.S.A.

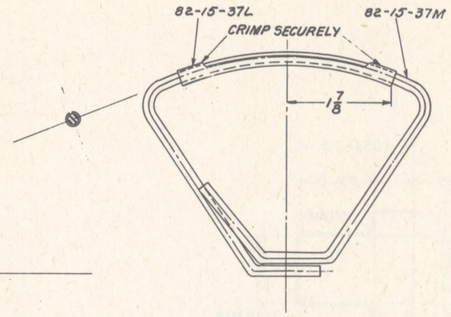
D

ORDNANCE DEPT. U.S.A.

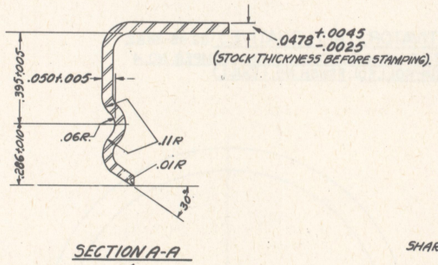




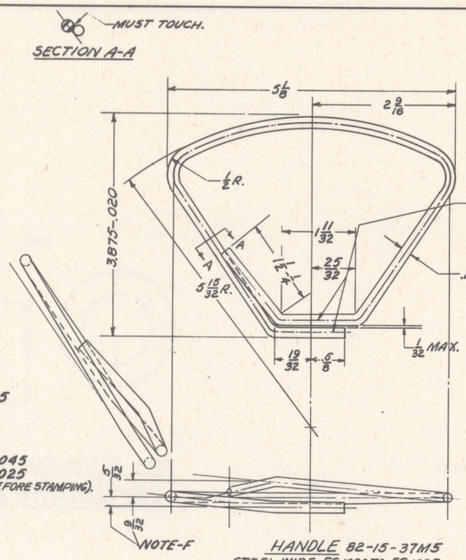
RING, RETAINER 82-15-37A5
STEEL, STRIP, COLD ROLLED WD1010
AFTER APPLYING PROTECTIVE FINISH, COAT WITH PRIMER SYNTHETIC LACQUER, RESISTING.



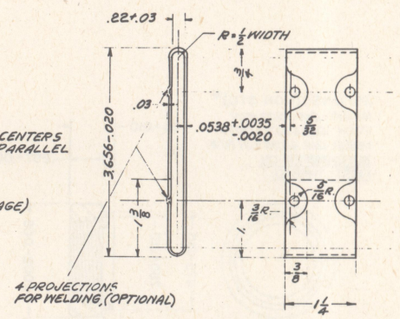
HANDLE ASSEMBLY 82-15-37B5



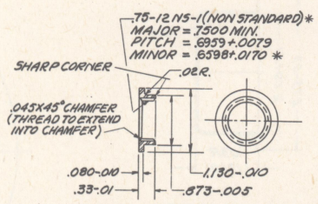
SECTION A-A
4



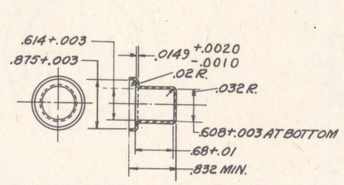
HANDLE 82-15-37M5
STEEL, WIRE, FS 1020 TO FS 1035



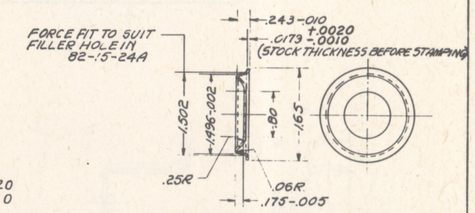
CLIP, SLIDE HANDLE 82-15-37C5
STEEL, WD1010 OR WD1020, COLD ROLLED



BUSHING, ACTIVATOR 82-15-37E5
STEEL, COLD ROLLED, FS 1112
FINISH ƒ 250

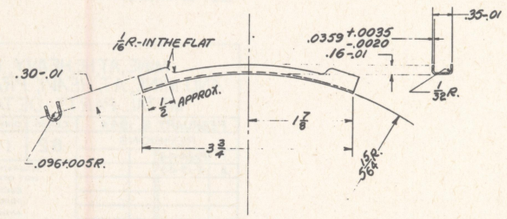


CUP, ACTIVATOR 82-15-37F5
STEEL, STRIP, COLD ROLLED WD1010, TEMPER NO.4 (SOFT SKIN ROLLED) FINISH NO. 1 DULL



CAP, CLOSING 82-15-37G5
STEEL STRIP, WD 1010, COLD-ROLLED, TEMPER NO.4, (SOFT SKIN-ROLLED), FINISH NO.1 (DULL)

FOR ALTERNATIVE MATERIALS AND PROTECTIVE FINISHES, SEE LIST OF PARTS.

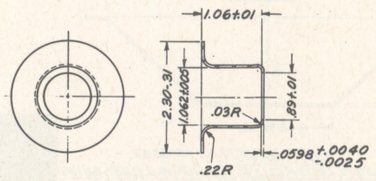


GRIP, HANDLE 82-15-37L5
STEEL, WD1010 OR WD1020, COLD ROLLED

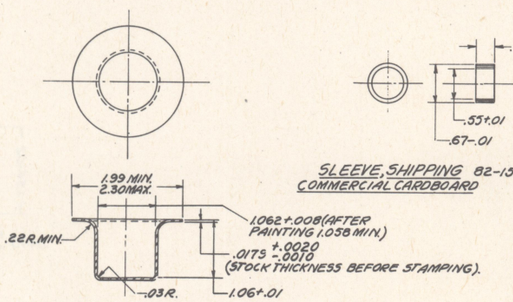
NOTES:—
A - OVALITY AFTER CORRUGATING PERMITTED PROVIDED SUM OF MAX AND MIN DIAMETERS DOES NOT EXCEED 17.518 AND IS NOT LESS THAN 17.498 WITH A MAXIMUM PERMISSABLE DIFFERENCE OF .020 BETWEEN MAX AND MIN DIAMETERS.

C - REMOVE ALL BURRS.

F - SEE ASSEMBLY REQUIREMENTS ON BASE COVER ASSEMBLY, PIECE MARK 82-15-47C OR 82-15-23C.



CUP, FUZE WELL (M12) 82-15-37N5
STEEL, STRIP, WD1010, COLD-ROLLED, TEMPER NO.4 (SOFT SKIN-ROLLED), FINISH NO.1 (DULL).
1



CUP, FUZE WELL (M6A1) 82-15-37D5
STEEL, STRIP, COLD ROLLED, WD1010

SLEEVE, SHIPPING 82-15-37K1
COMMERCIAL CARDBOARD

SCALE 1/1, 2/1, 4/1

SUPERSEDES OLD TRACING 82-15-37 UNDER REVISION DATE OF NOVEMBER 16, 1944

MINE, AT, HE, HEAVY, M6A1 AND MINE, AT, HEAVY, PRACTICE, M12.
METAL PARTS DETAILS.

FEBRUARY 8, 1944

REVISIONS				
3	8-24-44			
4	11-16-44			
5	4-19-48			

DRG. PERTAINS TO	
82-15-22	M6A1 MINE
82-15-44	M12 MINE
82-15-23	

D

CLASS	DIVISION	DRAWING	FILE
82	15	37	

TOLERANCE ON DIMENSIONS NOT OTHERWISE SPECIFIED
DECIMALS ±
FRACTIONALS ±
ANGULAR ±

DFTSMAN. J.E.T. | CHECKED J.A.H. | ENGINEER K.L.M. | APPROVED C.S.R.

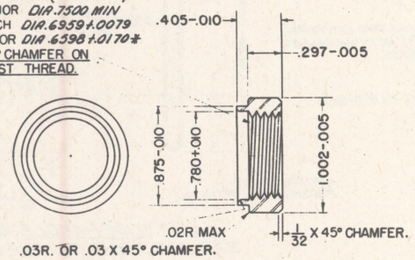
SUBMITTED: A.M. Gallagher, Capt. Ord. Dept. U.S.A.
EXAMINED: L.P. Woodling, Lt. Col. Ord. Dept. U.S.A.
APPROVED BY ORDER OF THE CHIEF OF ORDNANCE: C.S. Reed, Col. Ord. Dept. U.S.A.

ORDNANCE DEPT. U.S.A.

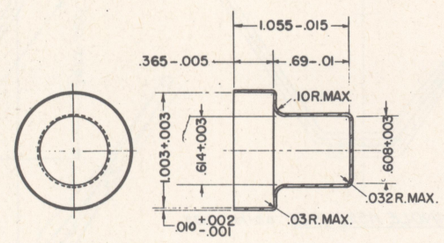
HEAT TREATMENT AND FINAL FINISH

PHYSICAL PROPERTIES	
Y.P.	
T.S.	
EL. 2	
RED.	
BR.	
ROCK.	

.75-12NS-1 (NON STD)*
MAJOR DIA .7500 MIN
PITCH DIA .6959 +.0079
MINOR DIA .6398 +.0170 -*
30° CHAMFER ON FIRST THREAD.

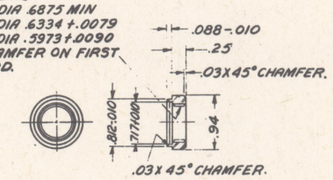


BUSHING, ACTIVATOR, (ALTERNATIVE) 82-15-38A2
STEEL, F5 1010 TO F5 1020, COLD-ROLLED
2/1

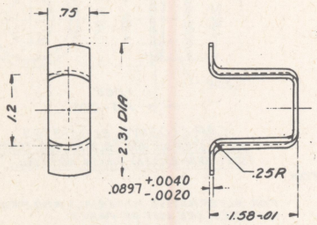


CUP, ACTIVATOR, (ALTERNATIVE) 82-15-38B2
STEEL, STRIP, WD1010, COLD-ROLLED, TEMPER NO. 4 (SOFT SKIN-ROLLED), FINISH NO. 1 (DULL)

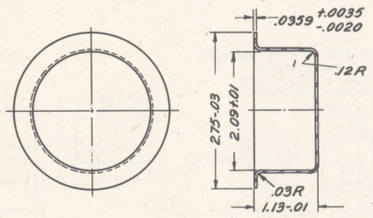
.6875-12NS-1
MAJOR DIA .6875 MIN
PITCH DIA .6334 +.0079
MINOR DIA .5973 +.0090
30° CHAMFER ON FIRST THREAD.



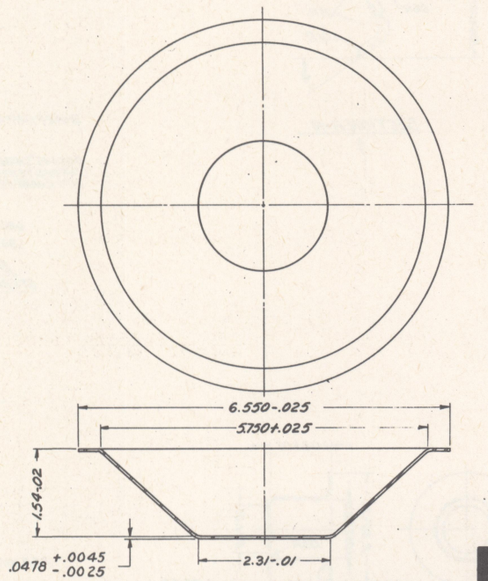
BUSHING, ACTIVATOR 82-15-38D2
STEEL, WD1112, COLD-DRAWN
FINISH 250



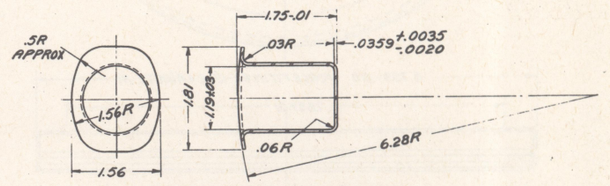
SUPPORT 82-15-38E2
STEEL, STRIP, WD1010 TO 1020, COLD-ROLLED TEMPER NO. 3, (QUARTER-HARD) FINISH NO. 1 (DULL)



CUP, ACTIVATOR, BOTTOM 82-15-38F2
STEEL, STRIP, WD1010, COLD-ROLLED, TEMPER NO. 4 (SOFT SKIN-ROLLED), FINISH NO. 1 (DULL)

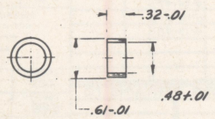


CUP, INNER 82-15-38G2
STEEL, WD1010, COLD-ROLLED, TEMPER NO. 4, (SOFT SKIN-ROLLED), FINISH NO. 1, (DULL)



CUP, ACTIVATOR, SIDE 82-15-38H2
STEEL, STRIP, WD1010, COLD-ROLLED, TEMPER NO. 4 (SOFT SKIN-ROLLED) FINISH NO. 1, (DULL)

FOR PROTECTIVE FINISHES, SEE LIST OF PARTS.



SLEEVE, SHIPPING 82-15-38K2
CARDBOARD, COMMERCIAL

[redacted]

CLASSIFICATION CHANGED TO UNCLASSIFIED
BY AUTHORITY OF OCM 24813
BY CAPT. _____

REMOVE ALL BURRS.

MINE, AT, HE HEAVY, M6A1,
AND MINE, A.T, HEAVY, PRACTICE, M12.
METAL PARTS DETAILS.

FEBRUARY 8, 1944

REVISIONS	
1	8-24-44
2	4-19-48

DRG. PERTAINS TO	
82-15-22	M6A1
82-15-44	M12

CLASS	DIVISION	DRAWING	FILE
82	15	38	

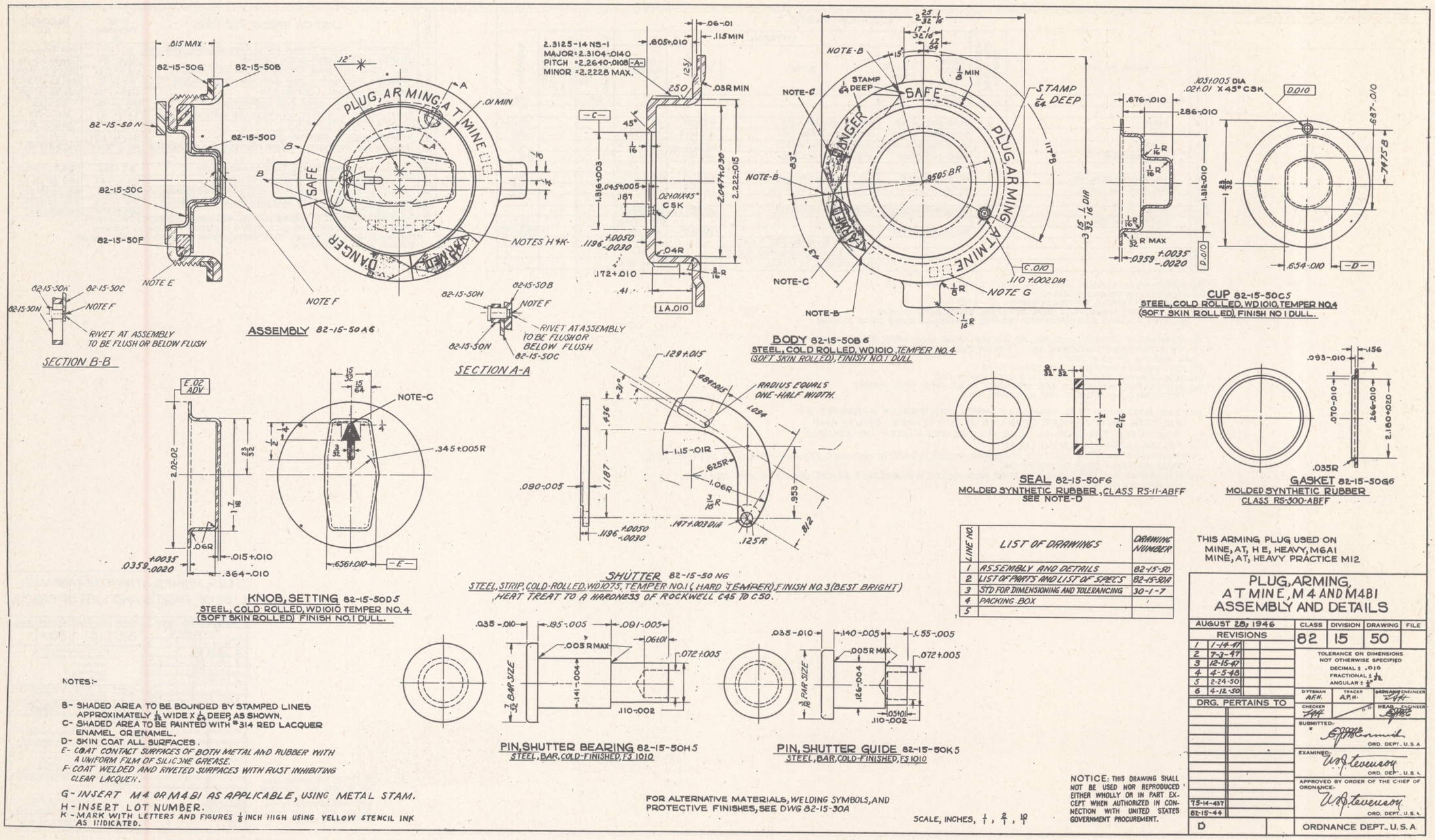
TOLERANCE ON DIMENSIONS NOT OTHERWISE SPECIFIED
DECIMAL ±
FRACTIONAL ±
ANGULAR ±

DFTSMAN	TRACER	ENGINEER
L.E.B.	L.E.B.	KL
CHECKER		PRINCIPAL ENGINEER

SUBMITTED: P.L. Christensen, MAJOR ORD. DEPT. U.S.A.
EXAMINED: W. H. Holder, COL. ORD. DEPT. U.S.A.
APPROVED BY ORDER OF THE CHIEF OF ORDNANCE: G. Baker, COL. ORD. DEPT. U.S.A.

D

ORDNANCE DEPT., U.S.A.



LINE NO.	LIST OF DRAWINGS	DRAWING NUMBER
1	ASSEMBLY AND DETAILS	82-15-50
2	LIST OF PARTS AND LIST OF SPECS	82-15-50A
3	STD FOR DIMENSIONING AND TOLERANCING	30-1-7
4	PACKING BOX	
5		

THIS ARMING PLUG USED ON
MINE, AT, H E, HEAVY, M6A1
MINE, AT, HEAVY PRACTICE M12

NOTES:-

B- SHADED AREA TO BE BOUNDED BY STAMPED LINES APPROXIMATELY 1/32 WIDE X 1/64 DEEP AS SHOWN.
C- SHADED AREA TO BE PAINTED WITH #314 RED LACQUER ENAMEL OR ENAMEL.
D- SKIN COAT ALL SURFACES.
E- COAT CONTACT SURFACES OF BOTH METAL AND RUBBER WITH A UNIFORM FILM OF SILICONE GREASE.
F- COAT WELDED AND RIVETED SURFACES WITH RUST INHIBITING CLEAR LACQUER.
G- INSERT M4 OR M4B1 AS APPLICABLE, USING METAL STAMP.
H- INSERT LOT NUMBER.
K- MARK WITH LETTERS AND FIGURES 1/8 INCH HIGH USING YELLOW STENCIL INK AS INDICATED.

FOR ALTERNATIVE MATERIALS, WELDING SYMBOLS, AND PROTECTIVE FINISHES, SEE DWG 82-15-30A

SCALE, INCHES, 1, 2, 10

NOTICE: THIS DRAWING SHALL NOT BE USED NOR REPRODUCED EITHER WHOLLY OR IN PART EXCEPT WHEN AUTHORIZED IN CONNECTION WITH UNITED STATES GOVERNMENT PROCUREMENT.

PLUG, ARMING, AT MINE, M4 AND M4B1 ASSEMBLY AND DETAILS

AUGUST 28, 1946

REVISIONS	
1	1-14-47
2	7-3-47
3	12-15-47
4	4-5-48
5	2-24-50
6	4-12-50

DRG. PERTAINS TO

T5-14-437
82-15-44

D

CLASS	DIVISION	DRAWING	FILE
82	15	50	

TOLERANCE ON DIMENSIONS NOT OTHERWISE SPECIFIED
DECIMAL ± .010
FRACTIONAL ± 1/64
ANGULAR ± 1/2°

D'FTSMAN A.F.H. | TRACER A.P.H. | ORDNANCE ENGINEER | CHECKER | O.O. | HEAD, ENGINEER

SUBMITTED:
ORD. DEPT. U.S.A.

EXAMINED:
ORD. DEPT. U.S.A.

APPROVED BY ORDER OF THE CHIEF OF ORDNANCE:
ORD. DEPT. U.S.A.

ORDNANCE DEPT., U.S.A.

LIST OF PARTS

ONE 1	NAME OF PART	NUMBER REQ'D. PER ASSEMBLY	PIECE-MARK	MATERIAL: SIZE OR FORM	MATERIAL: KIND	MATERIAL: GRADE	MATERIAL: SPEC. NUMBER	APPROXIMATE UNITE WEIGHT (POUNDS)	APPROX. GROSS WT PER 1000 ASSEMBLY (POUNDS)	REMARKS
1	ASSEMBLY		82-15-50A					.38		(S)
2										
3	BODY	1	82-15-50B	STRIP	STEEL, COLD ROLLED	WD 1020	57-136			(Pa)(x)
4	CUP	1	82-15-50C	STRIP	STEEL, COLD ROLLED	WD 1010	57-136			(Pa)
5	GASKET	1	82-15-50G	MOLDED	RUBBER, SYNTHETIC	CLASS R8-500-A8FF	MIL-R-3065			(C)
6	KNOB, SETTING	1	82-15-50D	STRIP	STEEL, COLD ROLLED	WD 1010	57-136			(Pa)
7										
8	PIN, SHUTTER BEARING	1	82-15-50H	BAR	STEEL, COLD FINISHED	FS 1010	QQ-S-633			(Pa)
9	PIN, SHUTTER GUIDE	1	82-15-50K	BAR	STEEL, COLD FINISHED	FS 1010	QQ-S-633			(Pa)
10										
11	SEAL	1	82-15-50F	MOLDED	RUBBER SYNTHETIC	CLASS R8-11-A8FF	MIL-C-3133			
12	GREASE, SILICONE						COMMERCIAL			(t)
13	SHUTTER	1	82-15-50M	STRIP	STEEL	WD 1075	57-136			(Y)(Pa)(q)
14					LACQUER ENAMEL, RED #314	I	JAN-L-73			(b)
15					LACQUER, RUST-INHIBITING, CLEAR		3-184			
16					INK, STENCIL, YELLOW		TT-I-558			

(b) ALTERNATIVE: ENAMEL, RED, #314, GRADE I, SPEC. JAN-E-74 (u)
(C) 1500 PSI MIN TENSILE STRENGTH
CHANGE IN TENSILE STRENGTH (SUFFIX A) = -25% MAX
(P) PROTECTIVE FINISHES FOR IRON AND STEEL PARTS, SPEC. 57-0-2
(Pa) TYPE I, CLASS R5C (CHROMATE TREATED TO PRODUCE OLIVE DRAB COLOR)

(q) ALTERNATIVE: STEEL, COLD-ROLLED, WD 1010 TO WD 1020, SPEC. 57-136 (r)(u)(w)
(r) FOR ALTERNATIVE MATERIAL ONLY, STAMP THE LETTER "S" 1/8 HIGH X 1/64 DEEP ON BOTTOM OF SHUTTER.
(S) FOR WELDING SYMBOLS, SEE JAN-STD-19
(t) DOW CORNING DC 7 or APPROVED SUBSTANTIAL EQUAL
(u) ALTERNATIVE MATERIALS ARE INTENDED TO BE USED ONLY WHEN PRESCRIBED MATERIALS ARE NOT AVAILABLE

(w) THIS ALTERNATE TO BE USED ONLY WHEN SPECIFICALLY APPROVED BY CONTRACTING OFFICER (FOR USE IN HE MINES ONLY) AND WHEN USED, THE ARMING PLUG WILL BE DESIGNATED AND STAMPED "PLUG, ARMING, AT MINE, M4B1."
(x) ALTERNATIVE MATERIAL:- (u) STEEL, STRIP, COLD-ROLLED, WD 1010 TO WD 1020, TEMPER NO. 4 (SOFT SKIN-ROLLED) FINISH NO. 3 (BEST BRIGHT), SPEC 57-136
(y) ALTERNATIVE MATERIAL:- (u) STEEL, STRIP, COLD-ROLLED, WD 1065, SPEC 57-136, OR STEEL, HOT-ROLLED, WD 1065 OR WD 1075, SPEC 57-136.

LINE NO.	LIST OF SPECIFICATIONS	SPEC NUMBER *	REQUIRED BY
1	AMMUNITION EXCEPT SMALL ARMS AMM, GENERAL SPEC. FOR	50-0-1	DRG 82-15-50
2	ENAMEL, LUSTRELESS QUICK DRYING	JAN-E-74	DRG 82-15-50
3	CELLULAR RUBBER PRODUCTS, GENERAL PURPOSE	MIL-C-3133	DRG 82-15-50
4	FINISHES PROTECTIVE, FOR IRON AND STEEL PARTS	57-0-2	DRG 82-15-50
5	LACQUER ENAMEL, LUSTRELESS	JAN-L-73	DRG 82-15-50
6	METALS, GENERAL SPEC. FOR INSPECTION OF	QQ-M-151	57-136
7	PAINT, VARNISH, LACQUER, AND RELATED MATERIALS, ETC	TT-P-141	JAN-L-73
8	COLOR CARD SUPPLEMENT	3-1	JAN-L-73
9	RUBBER GOODS, GENERAL SPEC. FOR	ZZ-R-601	20-116
10	RUBBER AND SYNTHETIC RUBBER COMPOUNDS, GEN. PURPOSE	MIL-R-3065	DRG 82-15-50
11			
12	STEEL, SHEETS AND STRIPS, CARBON AND ALLOY	57-136	DRG 82-15-50
13	STEEL, CARBON; BARS GENERAL PURPOSE	QQ-S-633	DRG 82-15-50
14	PACKING AND MARKING FOR DOMESTIC SHIPMENT OF INERT AMM. COMPONENTS ETC	MIL-P-10025	DRG 82-15-50
15	INK, STENCIL, OPAQUE FOR MARKING NON-POROUS SURFACES	TT-I-558	DRG 82-15-50
16	WELDING SYMBOLS	JAN-STD-19	DRG 82-15-50

* THE SPECIFICATION NUMBERS SHOWN ARE BASIC NUMBERS ONLY. WHEN A SPECIFICATION IS REVISED, A LETTER IS AFFIXED TO ITS BASIC NUMBER. SPECIFICATIONS REFERRED TO IN THESE SPECIFICATIONS AND NOT LISTED HEREON, SHALL NOT APPLY.

NOTICE: THIS DRAWING SHALL NOT BE USED NOR REPRODUCED EITHER WHOLLY OR IN PART EXCEPT WHEN AUTHORIZED IN CONNECTION WITH UNITED STATES GOVERNMENT PROCUREMENT.

PLUG, ARMING, AT MINE, M4 AND M4B1
LIST OF PARTS AND LIST OF SPEC'S.

AUGUST 28, 1946

REVISIONS
1 1-14-47
2 12-15-47
3 4-5-48
4 2-24-50
5 4-12-50

DRG. PERTAINS TO
75-14-437
82-15-44

CLASS	DIVISION	DRAWING	FILE
82	15	50A	

TOLERANCE ON DIMENSIONS NOT OTHERWISE SPECIFIED
DECIMAL ±
FRACTIONAL ±
ANGULAR ±

DRAFTSMAN A.F.H. | TRACER A.F.H. | ORDNANCE ENGINEER | CHECKER | HEAD ENGINEER

SUBMITTED:
ORD. DEPT., U. S. A.

EXAMINED:
ORD. DEPT., U. S. A.

APPROVED BY ORDER OF THE CHIEF OF ORDNANCE:
ORD. DEPT., U. S. A.

D

ORDNANCE DEPT., U. S. A.

ORDNANCE DRAWING - SIZE D (ALTERNATIVE)

LIST OF PARTS

LINE NO.	NAME OF PART	NUMBER REQ'D PER COMPONENT	PIECE MARK	MATERIAL: SIZE OR FORM	MATERIAL: KIND	MATERIAL: GRADE	MATERIAL: SPEC NUMBER	APPROXIMATE UNIT WEIGHT (POUNDS)	APPROX GROSS WT OF RAW STOCK PER 1000 ASSEMBLIES	REMARKS
1	HEAD LOADING ASSEMBLY		82-16-6A				AXS-788	1.70		
2										
3	ASSEMBLY, HEAD	1	82-5-21A					1.14		
4										
5										
6	CHARGE, BURSTING	1	82-16-6B		COMPOSITION B	I	JAN-C-401			
7										
8										
9					LACQUER ENAMEL, OLIVE DRAB	I OR II	JAN-L-73			a
10										

a - ALTERNATIVE MATERIAL :- b, ENAMEL, OLIVE DRAB, GRADE I OR II, SPEC JAN-E-74.
b - ALTERNATIVE MATERIALS ARE INTENDED TO BE USED ONLY WHEN PRESCRIBED MATERIALS ARE NOT AVAILABLE.

LIST OF DRAWINGS

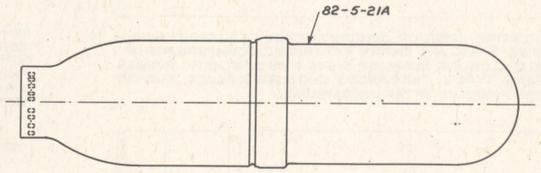
LINE NO.	LIST OF DRAWINGS	DRAWING NUMBER
1	HEAD LOADING ASSEMBLY	82-16-6
2	HEAD ASSEMBLY	82-5-21
3		
4		
5		

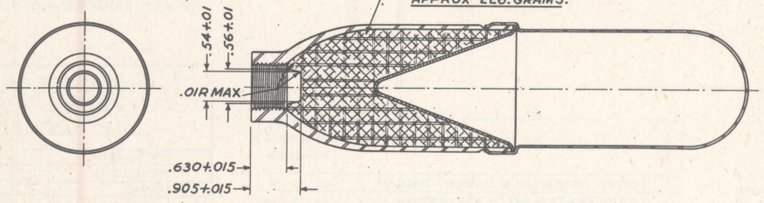
CL & DIV D

LIST OF SPECIFICATIONS

LINE NO.	LIST OF SPECIFICATIONS	SPEC NUMBER *	REQUIRED BY
1	AMMUNITION, EXCEPT SMALL ARMS AMMUNITION, GENERAL SPEC FOR	50-0-1	DWG 82-16-6
2			
3	COMPOSITION B	JAN-C-401	DWG 82-16-6
4			
5	ENAMEL, LUSTRELESS, QUICK-DRYING	JAN-E-74	DWG 82-16-6
6			
7	LACQUER ENAMEL, LUSTRELESS	JAN-L-73	DWG 82-16-6
8			
9	PAINTS AND RELATED MATERIALS, GEN SPEC FOR INSPECTION & TESTS	3-1	JAN-L-73
10	ROCKET, HE, AT, 2.36-INCH, M6A6 LOADING, ASSEMBLING AND PACKING	AXS-788	DWG 82-16-6
11			
12			
13			

* THE SPECIFICATION NUMBERS SHOWN ARE BASIC NUMBERS ONLY. WHEN A SPECIFICATION IS REVISED A LETTER IS AFFIXED TO ITS BASIC NUMBER. SPECIFICATIONS REFERRED TO IN THESE SPECIFICATIONS AND NOT LISTED HEREON, SHALL NOT APPLY.





CHARGE, BURSTING 82-16-6B
COMPOSITION B, GRADE I
APPROX 226. GRAMS.

ASSEMBLY 82-16-6A
TOUCH UP EXTERIOR SURFACES, WHERE NECESSARY, WITH OLIVE DRAB LACQUER ENAMEL, GRADE I OR II, OR OLIVE DRAB ENAMEL, GRADE I OR II.

NOTICE:-THIS DRAWING SHALL NOT BE USED OR REPRODUCED EITHER WHOLLY OR IN PART, EXCEPT WHEN AUTHORIZED IN CONNECTION WITH UNITED STATES GOVERNMENT PROCUREMENT.

ROCKET, HE, AT, 2.36 INCH, M6A6, HEAD LOADING ASSEMBLY.

HEAT TREATMENT & PROTECTIVE FINISH

PHYSICAL PROPERTIES

ORIGINAL DATE OF DRAWING JULY 15, 1942

REVISIONS

8	4-29-49	JPP
9	5-19-49	JPP

CLASS	DIVISION	DRAWING
82	16	6

DRAWING PERTAINS TO
82-6-3

WEIGHT — DO NOT APPLY PART NO. DO (As specified)

SCALE — H30 JPP

H30 JPP

TOLERANCES ON DIMENSIONS (Unless otherwise specified)

SUBMITTED M.J. Funk 5-20-49
K.F. Hoagland and date

EXAMINED and date

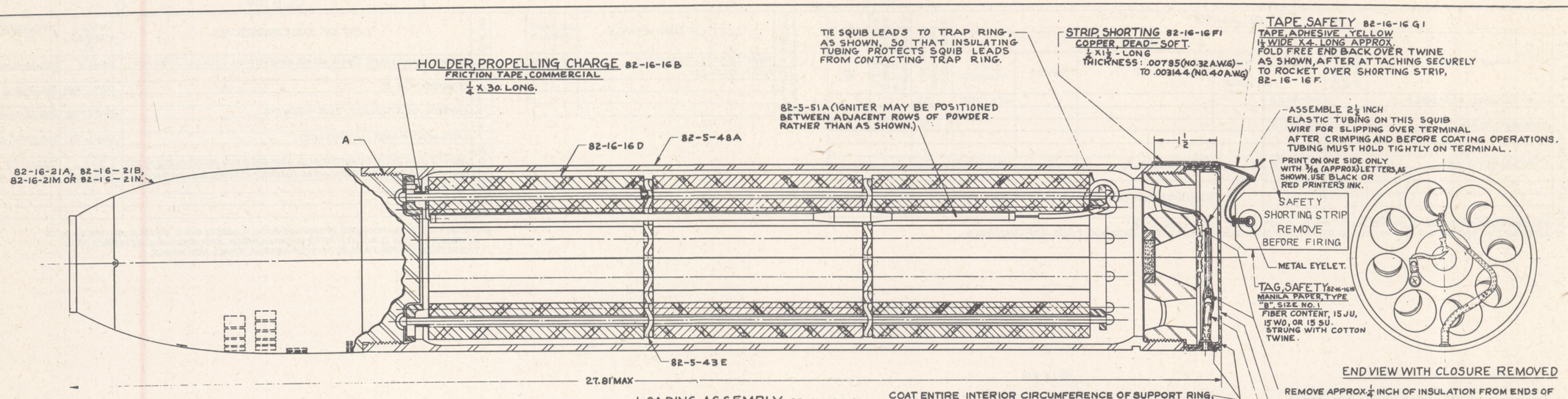
APPROVED W. Adams Col.

D

ORDNANCE DEPT U.S. ARMY

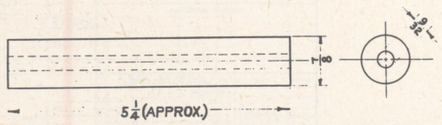
SUPERSEDES 82-16-6 WITH CHANGE APRIL 29, 1949

0 1 2 3 4 5 6 7 8 9 10 11 IN.



THIS DRAWING APPLIES TO THE FOLLOWING ROCKETS:-
ROCKET, HE, 4.5-INCH, M16A2.
ROCKET, PRACTICE, 4.5-INCH, M17A2.
ROCKET, HE, 4.5-INCH, M16A1.
ROCKET, PRACTICE, 4.5-INCH, M17A1

MARKING DIAGRAM



CHARGE, PROPELLING 82-16-16D5
POWDER, PROPELLENT, M13 (30 STICKS PER CHARGE).
TRIM LENGTH OF 10 STICKS UNIFORMLY TO OBTAIN 4.81 ± .01 LBS.
TOTAL WEIGHT OF CHARGE. ASSEMBLE ONE TRIMMED STICK PER WIRE.

NOTES:-
A - COAT THREADS WITH THREAD LUTING COMPOUND.
B - TOUCH UP EXTERIOR SURFACES OF MOTOR WHERE NECESSARY, WITH OLIVE DRAB LACQUER ENAMEL, GRADE I OR II; OR OLIVE DRAB ENAMEL, GRADE I OR II.
C - MARKING ON HE ROCKETS TO BE WITH YELLOW STENCIL INK. MARKING ON PRACTICE ROCKETS TO BE WITH WHITE STENCIL INK.
D - LOADERS LOT NUMBER.
E - DATE (MONTH AND YEAR) LOADED.
F - INSERT HE OR PRACTICE AS APPLICABLE.
G - INSERT M16A2, M16A1, M17A2 OR M17A1, AS APPLICABLE.
H - TO BE ACCEPTABLE ASSEMBLY MUST FREELY ENTER ALIGNMENT GAGE.
K - TOUCH UP EXTERIOR SURFACES OF SHELL WHERE NECESSARY, WITH OLIVE DRAB LACQUER ENAMEL, GRADE I OR II; OR OLIVE DRAB ENAMEL, GRADE I OR II, WHEN HE LOADED. WHEN INERT LOADED USE LIGHT BLUE LACQUER ENAMEL, GRADE I, OR LIGHT BLUE ENAMEL, GRADE I.

[redacted]

0 1 2 3 4 5 6 7 8 9 10 11 INCHES

LINE NO.	LIST OF DRAWINGS	DRAWING NUMBER
1	LOADING ASSEMBLY & MARKING DIAGRAM	82-16-16
2	LIST OF PARTS & SPECS. FOR LOADING ASS'Y.	82-16-16A
3	SHELL LOADING ASS'Y. & MARKING DIAGRAM	82-16-21
4	METAL PARTS ASSEMBLIES	82-5-48
5	IGNITER, ROCKET SUSPENDED, M18	82-5-51
6	FUZE ADAPTER & MISC. DETAILS	82-5-43
7	NOZZLE PLATE-CONTACT RING ASS'Y. & DETAILS	82-5-50
8	CONTACT RING ASSEMBLY & DETAILS	82-5-67
9		

DEPT. OF ARMY, ORD. DEPT., PICATINNY ARSENAL
CLASSIFICATION CANCELLED
BY AUTHORITY OF THE CHIEF OF ORDNANCE
E. J. WESSLEY, CAPT. O. D. SECURITY OFFICER
DATE 2-14-50 M. Thompson

ROCKET, 4.5-INCH, LOADING ASSEMBLY AND MARKING DIAGRAM.

SEPT. 6, 1944

REVISIONS	
1	10-2-44
2	11-7-44
3	1-13-45
4	3-15-45
5	8-15-45
6	2-14-50

DRG. PERTAINS TO
82-G-9
82-G-12
82-G-13

CLASS	DIVISION	DRAWING	FILE
82	16	16	

TOLERANCE ON DIMENSIONS NOT OTHERWISE SPECIFIED
DECIMAL ±
FRACTIONAL ±
ANGULAR ±

DFTSMAN. [illegible] TRACER S.C.G. ENGINEER
CHECKER B. ENGINEER

SUBMITTED: [signature] ENGR. ORD DEPT. U.S.A.
EXAMINED: H.G. Jones Jr. MAJOR ORD DEPT. U.S.A.
APPROVED BY ORDER OF THE CHIEF OF ORDNANCE: [signature] COL. ORD DEPT. U.S.A.

D

ORDNANCE DEPT., U.S.A.

LIST OF PARTS

LINE NO.	NAME OF PART	NUMBER REQ'D PER COMPONENT	PIECE-MARK	MATERIAL: SIZE OR FORM	MATERIAL: KIND	MATERIAL: GRADE	MATERIAL: SPEC. NUMBER	APPROX. UNIT WEIGHT (POUNDS)	APPROX. GROSS WT. OF RAW STOCK PER 1000 ASSEMBLIES	REMARKS
1	LOADING ASSEMBLY		82-16-16A				AXS-1421	38.0		N
2	IGNITER ASSEMBLY		82-5-51A				AXS-1415	.12		
3	BODY, NOZZLE AND TRAP ASSEMBLY		82-5-48A					17.5		
4										
5	SHELL LOADING ASSEMBLY, M16A2 & M20E1	1	82-16-21A					14.52		A
6	SHELL LOADING ASSEMBLY, M17A2 & M21E1	1	82-16-21B					14.52		B
7	SHELL LOADING ASSEMBLY, M16A1 & M20E2	1	82-16-21M					14.52		G
8	SHELL LOADING ASSEMBLY, M17A1 & M21E2	1	82-16-21N					14.52		H
9										
10										
11	CHARGE, PROPELLING	30	82-16-16D	5/16 LONG (APPROX.)	POWDER, PROPELLENT, M13		50-12-22	4.81±.01		
12	CLOSURE, NOZZLE	1	82-5-67E					.05		M
13	HOLDER, PROPELLING CHARGE	1	82-16-16B	1/2 X 30 LONG	FRICTION TAPE		COMMERCIAL			
14	STRIP, SHORTING	1	82-16-16F	STRIP	COPPER, DEAD SOFT		QQ-C-501			
15	TAPE, SAFETY	1	82-16-16G	STRIP	TAPE, ADHESIVE, YELLOW, TYPE 2	A	JAN-P-127			
16	TUBING, ELASTIC	1	82-16-16E	2 1/2 LONG						F
17	WASHER, SPACER, POWDER	20	82-5-43E	STRIP	STEEL	HARDNESS 90/95	57-136	.01		S
18	TAG, SAFETY	1	82-16-16H	NO. 1	MANILA PAPER, CLASS 2	TYPE "B"	UU-T-81			
19					THREAD LUTING MIXTURE					C
20					INK, PRINTER'S BLACK OR RED		COMMERCIAL			
21										
22					LACQUER, ENAMEL, LIGHT BLUE	I	JAN-L-73			L R
23					LACQUER, ENAMEL, OLIVE DRAB	I OR II	JAN-L-73			P K
24					INK, YELLOW STENCIL		TT-I-558			K
25					INK, WHITE STENCIL		TT-I-558			L
26					ADHESIVE, SYNTHETIC RUBBER	TYPE I	62-4			
27										
28										

LIST OF SPECIFICATIONS

LINE NO.	LIST OF SPECIFICATIONS	SPEC. NUMBER *	REQUIRED BY
1	ADHESIVE, SYNTHETIC RUBBER (NOT OR COLD BONDING)	62-4	DRG. 82-16-16
2	AMMUNITION, EXCEPT SMALL ARMS AMMUNITION, GENERAL SPEC. FOR	50-0-1	DRG. 82-16-16
3	COPPER; BARS, PLATES, RODS, SHAPES, SHEETS, AND STRIPS	QQ-C-501	DRG. 82-16-16
4	ENAMEL, LUSTRELESS, QUICK-DRYING	JAN-E-74	DRG. 82-16-16
5	FINISHES, PROTECTIVE FOR IRON AND STEEL PARTS	57-0-2	DRG. 82-5-43
6	METALS; GENERAL SPECIFICATION FOR INSPECTION OF	QQ-M-151	QQ-C-50.
7	PAINT, VARNISH, LACQUER AND RELATED MATERIALS, ETC.	TT-P-141	JAN-E-74
8	LACQUER ENAMEL, LUSTRELESS	JAN-L-73	DRG. 82-16-16
9	IGNITER ASSEMBLY, T4, MANUFACTURE, LOADING, ASSEMBLING AND PACKING	AXS-1415	DRG. 82-5-51
10	POWDER, PROPELLENT, M13, 5/8-INCH STICK	50-12-22	DRG. 82-16-16
11	STEEL, CARBON AND ALLOY, SHEETS AND STRIPS	57-136	DRG. 82-5-43
12	ROUND COMPLETE, LESS FUZE, ROCKET, HE, 4.5 INCH, M16; LOADING, ETC	AXS-1421	DRG. 82-16-16
13	STANDARD SPECIFICATION FOR MARKING SHIPMENTS	100-2	DRG. 82-16-16
14	TAGS: SHIPPING AND STOCK	UU-T-81	DRG. 82-16-16
15	TAPE, ADHESIVE, PRESSURE-SENSITIVE WATER-RESISTENT	JAN-P-127	DRG. 82-16-16
16	INK, STENCIL; OPAQUE, FOR MARKING NON-POROUS SURFACES	TT-I-558	DRG. 82-16-16

* THE SPECIFICATION NUMBERS SHOWN ARE BASIC NUMBERS ONLY. WHEN A SPECIFICATION IS REVISED A LETTER IS AFFIXED TO ITS BASIC NUMBER. SPECIFICATIONS REFERRED TO IN THESE SPECIFICATIONS AND NOT LISTED HEREON, SHALL NOT APPLY.

A-USED ONLY FOR ROCKET, HE, M16A2.
B-USED ONLY FOR ROCKET, PRACTICE, M17A2.
C-THREAD LUTING MIXTURE:-
DEWAXED WHITE SHELLAC _____ 25% COMMERCIAL.
ALCOHOL _____ 25%
BRONZE POWDER _____ 50% COMMERCIAL.

F-TUBING, ELASTIC, HYFLEX #5, MFG BY IRVINGTON VARNISH AND INSULATOR CO., IRVINGTON, N.J., OR APPROVED SUBSTANTIAL EQUAL.
G-USED ONLY FOR ROCKET, HE, M16A1.
H-USED ONLY FOR ROCKET, PRACTICE, M17A1.
K-USED ONLY FOR ROCKETS, HE.
L-USED ONLY FOR ROCKETS, PRACTICE.
M-FURNISHED BY METAL PARTS MANUFACTURER.
N-CRIMP WITH AIRCRAFT-MARINE PRODUCTS INC, (HARRISBURG, PA) TOOL NO 49065 OR 49184 OR APPROVED SUBSTANTIAL EQUAL.
P-ALTERNATIVE MATERIAL:- ENAMEL, OLIVE DRAB, GRADE I OR II, SPEC JAN-E-74.
R-ALTERNATIVE MATERIAL:- ENAMEL, LIGHT BLUE, GRADE I, SPEC JAN-E-74.
S-PROTECTIVE FINISH:- TYPE I, CLASS R5, SPEC 57-0-2.

THIS DRAWING APPLIES TO THE FOLLOWING ROCKETS:-
ROCKET, HE, 4.5 INCH, M16A2
ROCKET, PRACTICE, 4.5-INCH, M17A2
ROCKET, HE, 4.5-INCH, M16A1
ROCKET, PRACTICE, 4.5-INCH, M17A1

DEPT. OF ORD. DEV. DIV., PICATINNY ARSENAL
CLASSIFICATION CANCELLED
BY AUTHORITY OF THE CHIEF OF ORDNANCE
E. A. NESLEN, CAPT., O. D. SECURITY OFFICER
DATE 2-14-50 M. Thompson

[redacted]

ROCKET, 4.5-INCH, LIST OF PARTS AND SPECIFICATIONS FOR LOADING ASSEMBLY.

SEPTEMBER 6, 1944	CLASS	DIVISION	DRAWING	FILE
REVISIONS	82	16	16A	

1	10-2-44	
2	3-15-45	
3	8-15-45	
4	2-14-50	

TOLERANCE ON DIMENSIONS NOT OTHERWISE SPECIFIED
DECIMAL ±
FRACTIONAL ±
ANGULAR ±

D'FTSMAN	TRACER	ENGINEER
F.G.	Jgm	
CHECKER		ENGINEER
JB	60	EGJ

DRG. PERTAINS TO
82-16-16

SUBMITTED:- H. W. Beatty ENGR. ORD. DEPT. U.S.A.
EXAMINED:- H. J. Jones Jr. MAJOR ORD. DEPT. U.S.A.
APPROVED BY ORDER OF THE CHIEF OF ORDNANCE:- J. W. Mitchell COL., ORD. DEPT. U.S.A.

D J

ORDNANCE DEPT. U.S.A.

(a)-USED ONLY FOR ROCKETS, HE, M16A2, M16A1, M20E1 AND M20E2.
(b)-USED ONLY FOR ROCKETS, PRACTICE, M17A2, M17A1, M21E1 AND M21E2.

NOTES:-
A- TOUCH UP ALL OLIVE DRAB SURFACES WHERE PREVIOUS COATING IS DAMAGED WITH OLIVE DRAB LACQUER ENAMEL, GRADE I OR II, OR OLIVE DRAB ENAMEL. GRADE I OR II. RECOAT ENTIRE EXTERIOR BASE OF SHELL, EXCEPT THREADS WITH SPECIAL ETHYL CELLULOSE LACQUER.

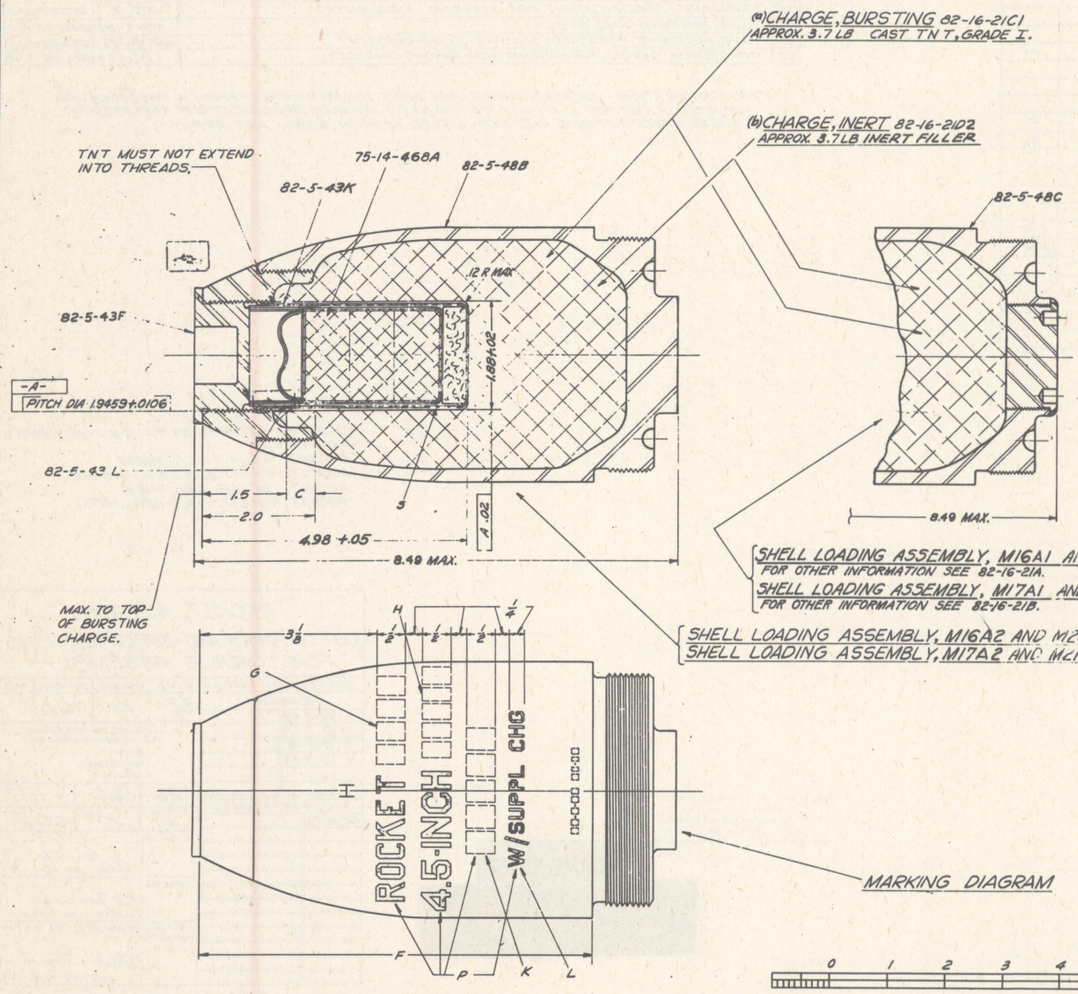
C- SHRINKAGE CAVITATION WITHIN THIS REGION SHALL NOT CAUSE REJECTION.
D- NO CHARGE PERMITTED INSIDE OF LINER.

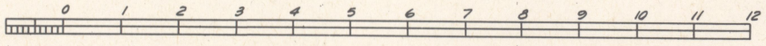
F- FOR ROCKETS, PRACTICE, COAT SHELL SURFACE, AS INDICATED, WITH LIGHT BLUE LACQUER ENAMEL, GRADE I, OR LIGHT BLUE ENAMEL, GRADE I.
G- INSERT "HE" OR "PRAC" AS APPLICABLE.
H- INSERT "M16A2", "M16A1", "M17A2", "M17A1", "M20E1", "M20E2", "M21E1" OR "M21E2" AS APPLICABLE.
K- INSERT "TNT" OR "INERT" AS APPLICABLE.
L- MARKING "W/SUPPL. CHG." IS FOR ROCKETS, HE, ONLY.

P- FOR ROCKETS, HE, MARKING TO BE WITH YELLOW STENCIL INK AND FOR ROCKETS, PRACTICE, MARKING TO BE WITH WHITE STENCIL INK.

R- SUPPLEMENTARY CHARGE ASSEMBLY, 75-14-468A, IS TO BE USED FOR ROCKETS, HE, ONLY AND IS PLACED IN CAVITY WITH FELT PAD FACING BOTTOM OF LINER, 82-5-43K.

S- CHECK ALIGNMENT OF LINER WITH PLUG GAGE SIMULATING M402 FUZE.





THIS DRAWING APPLIES TO THE FOLLOWING ROCKETS:-
ROCKET, HE, 4.5 INCH, M16A2.
ROCKET, HE, 4.5 INCH, M16A1.
ROCKET, PRACTICE, 4.5 INCH, M17A2.
ROCKET, PRACTICE, 4.5 INCH, M17A1.
ROCKET, HE, 4.5 INCH, M20E1.
ROCKET, HE, 4.5 INCH, M20E2.
ROCKET, PRACTICE, 4.5 INCH, M21E1.
ROCKET, PRACTICE, 4.5 INCH, M21E2.

[redacted]

LINE NO.	LIST OF DRAWINGS	DRAWING NUMBER
1	SHELL LOADING ASS'Y & MARKING DIAGRAM	82-16-21
2	LIST OF PARTS & SPECS. FOR SHELL LOADING	82-16-21A
3	METAL PARTS ASSEMBLIES	82-5-48
4	FUZE ADAPTER AND MISC. DETAILS	82-5-43
5		
6		
7	LOADING ACCESSORIES FOR DEEP CAVITY SHELL	75-14-468
8		
9		
10	STD FOR DIMENSIONING & TOLERANCING	30-1-7

DEPT. OF ARMY, ORD. DEPT., PICATINNY AR.
CLASSIFICATION CANCELLED
BY AUTHORITY OF THE CHIEF OF ORDNANCE
E. J. NESSLEY, CAPT. O. D. SECURITY OFFICER
DATE 2-14-50 M. Thompson

ROCKET, 4.5 INCH, SHELL LOADING ASS'Y. & MARKING DIAG.

MARCH 15, 1945

CLASS	DIVISION	DRAWING	FILE
82	16	21	

REVISIONS

1	8-15-45
2	2-14-50

TOLERANCE ON DIMENSIONS NOT OTHERWISE SPECIFIED
DECIMAL ±
FRACTIONAL ±
ANGULAR ±

DRG. PERTAINS TO
82-16-16

DRAFTSMAN M.M.E. TRACER L.M. ENGINEER
CHECKED M.A.B. ENGINEER E.E.B.

SUBMITTED: D.W. Gaunty ENGR., ORD. DEPT., U.S.A.
EXAMINED: A.L. Jones Jr. MAJ., ORD. DEPT., U.S.A.
APPROVED BY ORDER OF THE CHIEF OF ORDNANCE: G.W. Trichel COL., ORD. DEPT., U.S.A.

D ~~82-21-2~~

ORDNANCE DEPT., U.S.A.

LIST OF PARTS

LINE NO.	NAME OF PART	NUMBER REQ'D PER COMPONENT	PIECE-MARK	MATERIAL: SIZE OR FORM	MATERIAL: KIND	MATERIAL: GRADE	MATERIAL: SPEC. NUMBER	APPROXIMATE UNIT WEIGHT (POUNDS)	APPROX. GROSS WT. OF RAW STOCK PER 1000 ASSEMBLIES	REMARKS
1	SHELL LOADING ASSEMBLY, M16 A2 & M20E1		82-16-21A					14.52		
2	SHELL LOADING ASSEMBLY, M17A2 & M21E1		82-16-21B					14.52		
3	SHELL LOADING ASSEMBLY, M16A1 & M20E2		82-16-21M					14.52		
4	SHELL AND ADAPTER ASSEMBLY	1	82-5-48B					10.4		A
5	SUPPLEMENTARY CHARGE ASSEMBLY	1	75-14-468A					.365		A
6	SHELL LOADING ASSEMBLY, M17 A1 & M21E2		82-16-21N					14.52		
7	CHARGE, BURSTING	1	82-16-21C	CAST	TRINITROTOLUENE	I	JAN-T-248	3.7		A
8	CHARGE, INERT	1	82-16-21D	CAST	INERT FILLER	COMP. C	[illegible]	3.7		B
9										
10	SHELL AND ADAPTER ASSEMBLY	1	82-5-48C					10.26		B
11	LINER	1	82-5-43K	STRIP	ALUMINUM	COND A	QQ-A-561	.044		A
12										
13	SPACER	1	82-5-43L	SHEET	BOXBOARD		50-11-79	.011		
14										
15	PLUG, CLOSING		82-5-43F	MOLDED	MOLDED PHENOLIC	CLASS 1	AXS-815	.02		K
16										
17										
18										
19										A
20										
21										
22										
23										
24										
25										
26					GLUE	II	3-102			
27										
28										
29					LACQUER ENAMEL, LIGHT BLUE	I	JAN-L-73			B E
30										
31					LACQUER ENAMEL, OLIVE DRAB	I OR II	JAN-L-73			F
32					LACQUER, ETHYL CELLULOSE, SPECIAL		3-138			
33										
34					PAINT, ACID-PROOF BLACK		JAN-P-450			
35					INK, STENCIL, WHITE		TT-I-558			B
36					INK, STENCIL, YELLOW		TT-I-558			A
37										
38										
39										
40										

NOTES:-
A-USED ONLY FOR ROCKETS, HE, M16A2, M16A1, M20E1 AND M20E2.
B-USED ONLY FOR ROCKETS, PRACTICE M17A2, M17A1, M21E1 AND M21E2.

E-ALTERNATIVE MATERIAL:- ENAMEL, LIGHT BLUE, GRADE I, SPEC. JAN-E-74.
F-ALTERNATIVE MATERIAL:- ENAMEL, OLIVE DRAB, GRADE I OR II, SPEC. JAN-E-74.

K-ALTERNATIVE MATERIALS:-
1-MOLDED THERMOPLASTIC, SPEC. AXS-776.
2-HIGH ACETYL CELLULOSE ACETATE, CELANESE CORPORATION OF AMERICA, PLASTICS DIVISION, FORMULA TII60 MH (LUMARITH) OR EQUAL, WITH OLIVE DRAB COLOR, CELANESE NO. 06860 A, OR EQUAL.
3-DIE CASTING, ZINC-BASE ALLOY, COMP A, SPEC QQ-Z-363

LIST OF SPECIFICATIONS

LINE NO.	LIST OF SPECIFICATIONS	SPEC. NUMBER *	REQUIRED BY
1	AMMUNITION, EXCEPT SMALL ARMS AMMUNITION, GENERAL SPEC. FOR	50-0-1	DRG. 82-16-21
2	ALUMINUM (AL-2); PLATE AND SHEET	QQ-A-561	DRG. 82-5-43
3			
4	DIATOMACEOUS EARTH	PXS-1252	
5			
6	BOXBOARD	50-11-79	DRG 82-5-43
7	ENAMEL, LUSTRELESS, QUICK-DRYING	JAN-E-74	DRG. 82-16-21
8			
9	GLUE, FOR USE IN LOADING AMMUNITION	3-102	DRG 82-5-43
10			
11			
12	HYDROCARBON WAX		
13			
14			
15			
16	LACQUER ENAMEL, LUSTRELESS	JAN-L-73	DRG. 82-5-43
17	LACQUER, ETHYL CELLULOSE, SPECIAL (FOR ORDNANCE MATERIEL)	3-138	DRG. 82-16-21
18	LOADING OF H.E. SHELL WITH TNT, 50-50 AMATOL, TRIMONITE, ETC.	50-15-50	DRG. 82-16-21
19	LOADING WITH INERT FILLERS, MARKING AND PACKING	[illegible]	DRG. 82-16-21
20			
21	PAINT, ACID-PROOF BLACK, FOR AMMUNITION	JAN-P-450	DRG. 82-16-21
22	INK, STENCIL; OPAQUE, FOR MARKING NON-POROUS SURFACES, ETC.	TT-I-558	DRG. 82-16-21
23	PAINT, VARNISH, LACQUER AND RELATED MATERIALS, ETC	TT-P-141	JAN-E-74
24			
25	PHENOLIC MATERIAL, MOLDED	AXS-815	DRG. 82-5-43
26	PLASTICS, ORGANIC; GENERAL SPECIFICATIONS, TEST METHODS	L-P-406	AXS-776
27	POLYCHLORNAPHTHALENE, CRUDE	50-11-149	[illegible]
28			
29			
30	SHAPES, MOLDED THERMOPLASTIC, ETC.	AXS-776	DRG. 82-5-43
31	STANDARD SPECIFICATION FOR MARKING SHIPMENTS	100-2	DRG. 82-16-21
32			
33			
34	TRINITROTOLUENE (TNT)	JAN-T-248	DRG. 82-16-21
35	ZINC-BASE ALLOY; DIE CASTINGS	QQ-Z-363	DRG. 82-5-43

* THE SPECIFICATION NUMBERS SHOWN ARE BASIC NUMBERS ONLY. WHEN A SPECIFICATION IS REVISED, A LETTER IS AFFIXED TO ITS BASIC NUMBER. SPECIFICATIONS REFERRED TO IN THESE SPECIFICATIONS AND NOT LISTED HEREON, SHALL NOT APPLY.

THIS DRAWING APPLIES TO THE FOLLOWING ROCKETS:-
ROCKET, HE, 4.5 INCH, M16A2.
ROCKET, HE, 4.5 INCH, M16A1.
ROCKET, PRACTICE, 4.5 INCH, M17A2.
ROCKET, PRACTICE, 4.5 INCH, M17A1.
ROCKET, HE, 4.5 INCH, M20E1.
ROCKET, HE, 4.5 INCH, M20E2.
ROCKET, PRACTICE, 4.5 INCH, M21E1.
ROCKET, PRACTICE, 4.5 INCH, M21E2.

DEPT. OF ARMY, ORD. DEPT., PICATINNY ARSENAL
CLASSIFICATION CANCELLED
BY AUTHORITY OF THE CHIEF OF ORDNANCE
E. J. NESSLEY, CAPT. O. D. SECURITY OFFICER
DATE 2-14-50 M. Thompson

[redacted]

ROCKET, 4.5 INCH, LIST OF PARTS & SPECIFICATIONS FOR SHELL LOADING ASSEMBLY.

MARCH 15, 1945

CLASS	DIVISION	DRAWING	FILE
82	16	21A	

REVISIONS

1	8-15-45
2	2-14-50

TOLERANCE ON DIMENSIONS NOT OTHERWISE SPECIFIED
DECIMAL ±
FRACTIONAL ±
ANGULAR ±

DRG. PERTAINS TO
82-16-21

DRAFTSMAN	TRACER	ENGINEER
TR 2-17A	S.M.	
CHECKED: E.E.J.		ENGINEER: E. E. [illegible]

SUBMITTED:- B. W. Beatty ENGR., ORD. DEPT. U. S. A.
EXAMINED:- H. L. Jones Jr. LT. COL., ORD. DEPT. U. S. A.
APPROVED BY ORDER OF THE CHIEF OF ORDNANCE:- G. M. Swiher COL., ORD. DEPT. U. S. A.

~~TR 2-17A~~

ORDNANCE DEPT., U. S. A.

ARMY-RARITAN ARSENAL (RAPD), METUCHEN, NJ-51-889